Panasonic

Order No. SBPAC1403009CE

TECHNICAL DATA & SERVICE MANUAL

R410A

INVERTER

Indoor Unit	Outdoor Unit
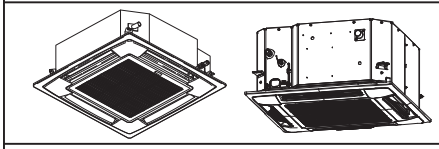 4-Way Cassette	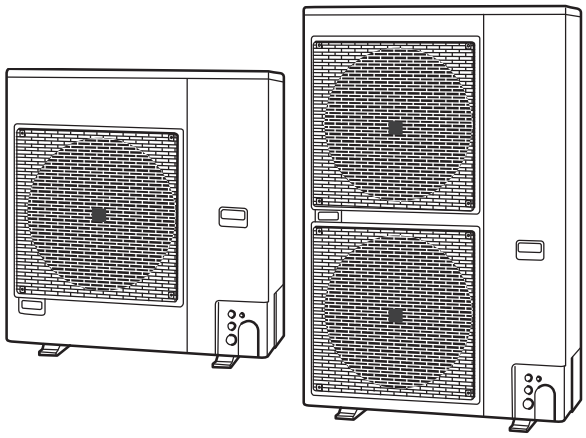
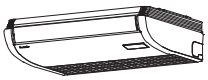 Ceiling	
Wall Mounted	
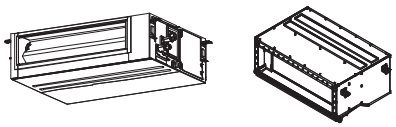 Low Silhouette Ducted Ducted	

■ R410A Models

Model No.

Indoor Units

Type	Indoor Units Type	36	45	50	60	71	100	125	140
U1	4-Way Cassette	S-36PU1E5A	S-45PU1E5A	S-50PU1E5A	S-60PU1E5A	S-71PU1E5A	S-100PU1E5A	S-125PU1E5A	S-140PU1E5A
T2	Ceiling	S-36PT2E5A	S-45PT2E5A	S-50PT2E5A	S-60PT2E5A	S-71PT2E5A	S-100PT2E5A	S-125PT2E5A	S-140PT2E5A
K1	Wall Mounted	S-36PK1E5A	S-45PK1E5A	S-50PK1E5A	S-60PK1E5A	S-71PK1E5A	S-100PK1E5A	–	–
F1	Low Silhouette Ducted	S-36PF1E5A	S-45PF1E5A	S-50PF1E5A	S-60PF1E5A	S-71PF1E5A	S-100PF1E5A	S-125PF1E5A	S-140PF1E5A
N1	Ducted	S-36PN1E5A	S-45PN1E5A	S-50PN1E5A	S-60PN1E5A	S-71PN1E5A	S-100PN1E5A	S-125PN1E5A	S-140PN1E5A

Outdoor Units

Type	Outdoor Units Type	50	60	71	100	125	140
PE1	Single Split (1-phase)	U-50PE1E5	U-60PE1E5A	U-71PE1E5A	U-100PE1E5A	U-125PE1E5A	U-140PE1E5A
	Single Split (3-phase)	–	–	U-71PE1E8A	U-100PE1E8A	U-125PE1E8A	U-140PE1E8A
PEY1	Single Split (1-phase)	–	U-60PEY1E5	U-71PEY1E5	U-100PEY1E5	U-125PEY1E5	–
	Single Split (3-phase)	–	–	–	U-100PEY1E8	U-125PEY1E8	U-140PEY1E8

85464849331000

REFERENCE NO. SM830231-00

IMPORTANT□
Please Read Before Starting

This air conditioner must be installed by the sales dealer or installer.
This information is provided for use only by authorized persons.

For safe installation and trouble-free operation, you must:

- Carefully read this instruction booklet before beginning.
- Follow each installation or repair step exactly as shown.
- This air conditioner shall be installed in accordance with National Wiring Regulations.
- Pay close attention to all warning and caution notices given in this manual.

⚠ WARNING This symbol refers to a hazard or unsafe practice which can result in severe personal injury or death.

⚠ CAUTION This symbol refers to a hazard or unsafe practice which can result in personal injury or product or property damage.

If Necessary, Get Help

These instructions are all you need for most installation sites and maintenance conditions. If you require help for a special problem, contact our sales/service outlet or your certified dealer for additional instructions.

In Case of Improper Installation

The manufacturer shall in no way be responsible for improper installation or maintenance service, including failure to follow the instructions in this document.

SPECIAL PRECAUTIONS

⚠ WARNING When Wiring

ELECTRICAL SHOCK CAN CAUSE SEVERE PERSONAL IN□URY OR DEATH. ONLY A QUALIFIED, EXPERIENCED ELECTRICIAN SHOULD ATTEMPT TO WIRE THIS SYSTEM.

- Do not supply power to the unit until all wiring and tubing are completed or reconnected and checked.
- Highly dangerous electrical voltages are used in this system.
  Carefully refer to the wiring diagram and these instructions when wiring. Improper connections and inadequate grounding can cause accidental injury or death.
- Connect all wiring tightly. Loose wiring may cause overheating at connection points and a possible fire hazard.
- Provide a power outlet to be used exclusively for each unit.
- Provide a power outlet exclusively for each unit, and full disconnection means having a contact separation in all poles must be incorporated in the fixed wiring in accordance with the wiring rules.
- To prevent possible hazards from insulation failure, the unit must be grounded.

When Transporting

Be careful when picking up and moving the indoor and outdoor units. Get a partner to help, and bend your knees when lifting to reduce strain on your back. Sharp edges or thin aluminum fins on the air conditioner can cut your fingers.

When Installing□

Select an installation location which is rigid and strong enough to support or hold the unit, and select a location for easy maintenance.

□ In a Room

Properly insulate any tubing run inside a room to prevent “sweating” that can cause dripping and water damage to walls and floors.

⚠ CAUTION Keep the fire alarm and the air outlet at least 1.5 m away from the unit.

□ In Moist or Uneven Locations

Use a raised concrete pad or concrete blocks to provide a solid, level foundation for the outdoor unit. This prevents water damage and abnormal vibration.

□ In an Area with High Winds

Securely anchor the outdoor unit down with bolts and a metal frame. Provide a suitable air baffle.

□ In a Snowy Area (for Heat Pump-type Systems)

Install the outdoor unit on a raised platform that is higher than drifting snow. Provide snow vents.

□ At least 2.5 m

Indoor unit of this air conditioner shall be installed in a height of at least 2.5 m.

□ In laundry rooms

Do not install in laundry rooms. Indoor unit is not drip proof.

When Connecting Refrigerant Tubing

⚠ WARNING

- When performing piping work do not mix air except for specified refrigerant (R410A) in refrigeration cycle.
  It causes capacity down, and risk of explosion and injury due to high tension inside therefrigerant cycle.
- Refrigerant gas leakage may cause fire.
- Do not add or replace refrigerant other than specified type. It may cause product damage, burst and injury, etc.

- Ventilate the room well, in the event that is refrigerant gas leaks during the installation. Be careful not to allow contact of the refrigerant gas with a flame as this will cause the generation of poisonous gas.
- Keep all tubing runs as short as possible.
- Use the flare method for connecting tubing.
- Apply refrigerant lubricant to the matching surfaces of the flare and union tubes before connecting them, then tighten the nut with a torque wrench for a leak-free connection.
- Check carefully for leaks before starting the test run.
- Do not leak refrigerant while piping work for an installation or re-installation, and while repairing refrigeration parts.
  Handle liquid refrigerant carefully as it may cause frostbite.

When Servicing

- Turn the power OFF at the main power box (mains) before opening the unit to check or repair electrical parts and wiring.
- Keep your fingers and clothing away from any moving parts.
- Clean up the site after you finish, remembering to check that no metal scraps or bits of wiring have been left inside the unit being serviced.

⚠ WARNING

- This product must not be modified or disassembled under any circumstances.
  Modified or disassembled unit may cause fire, electric shock or injury.
- Do not clean inside the indoor and outdoor units by users.
  Engage authorized dealer or specialist for cleaning.
- In case of malfunction of this appliance, do not repair by yourself. Contact the sales dealer or service dealer for repair.

⚠ CAUTION

- Do not touch the air inlet or the sharp aluminum fins of the outdoor unit. You may get injured.
- Ventilate any enclosed areas when installing or testing the refrigeration system. Escaped refrigerant gas, on contact with fire or heat, can produce dangerously toxic gas.
- Confirm after installation that no refrigerant gas is leaking.
  If the gas comes in contact with a burning stove, gas water heater, electric room heater or other heat source, it can cause the generation of poisonous gas.

Others

⚠ WARNING

- Do not sit or step on the unit, you may fall down accidentally.

⚠ CAUTION

- Do not touch the air inlet or the sharp aluminum fins of the outdoor unit. You may get injured.

- Do not stick any object into the FAN CASE.
  You may be injured and the unit may be damaged.

Check of Density Limit

The room in which the air conditioner is to be installed requires a design that in the event of refrigerant gas leaking out, its density will not exceed a set limit.

The refrigerant (R410A), which is used in the air conditioner, is safe, without the toxicity or combustibility of ammonia, and is not restricted by laws imposed to protect the ozone layer. However, since it contains more than air, it poses the risk of suffocation if its density should rise excessively. Suffocation from leakage of refrigerant is almost non-existent. With the recent increase in the number of high density buildings, however, the installation of multi air conditioner systems is on the increase because of the need for effective use of floor space, individual control, and energy conservation by curtailing heat and carrying power, etc.
Most importantly, the multi air conditioner system is able to replenish a large amount of refrigerant compared to conventional individual air conditioners. If a single unit of the multi air conditioner system is to be installed in a small room, select a suitable model and installation procedure so that if the refrigerant accidentally leaks out, its density does not reach the limit (and in the event of an emergency, measures can be made before injury can occur).
In a room where the density may exceed the limit, create an opening with adjacent rooms, or install mechanical ventilation combined with a gas leak detection device. The density is as given below.

$$\frac{\text{Total amount of refrigerant (kg)}}{\text{Min. volume of the indoor unit installed room (m}^3\text{)}} \leq \text{Density limit (kg/m}^3\text{)}$$

The density limit of refrigerant which is used in multi air conditioners is 0.3 kg/m^3 (ISO 5149).

NOTE

1. If there are 2 or more refrigerating systems in a single refrigerating device, the amount of refrigerant should be as charged in each independent device.

   For the amount of charge in this example:

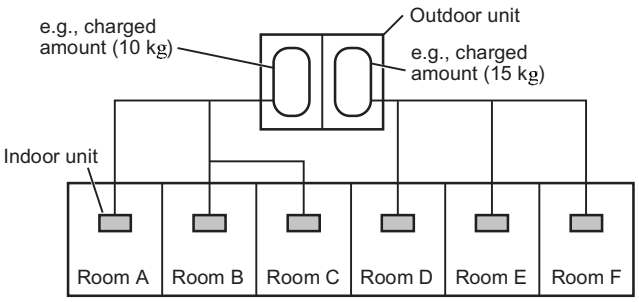

   The possible amount of leaked refrigerant gas in rooms A, B and C is 10 kg.
   The possible amount of leaked refrigerant gas in rooms D, E and F is 15 kg.

> **RoHS**
> This product does not contain any hazardous substances prohibited by the RoHS Directive.
>
> **WARNING**
> You are requested to use RoHS compliant for maintenance or repair.

2. The standards for minimum room volume are as follows.

(1) No partition (shaded portion)

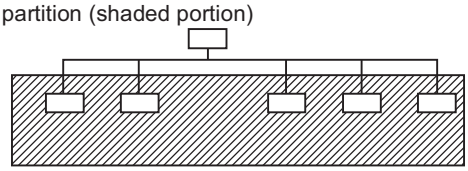

(2) When there is an effective opening with the adjacent room for ventilation of leaking refrigerant gas (opening without a door, or an opening 0.15 or larger than the respective floor spaces at the top or bottom of the door).

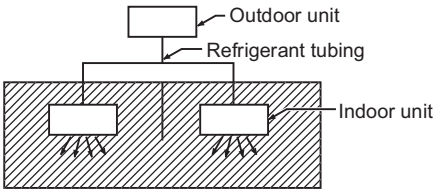

(3) If an indoor unit is installed in each partitioned room and the refrigerant tubing is interconnected, the smallest room of course becomes the object. But when mechanical ventilation is installed interlocked with a gas leakage detector in the smallest room where the density limit is exceeded, the volume of the next smallest room becomes the object.

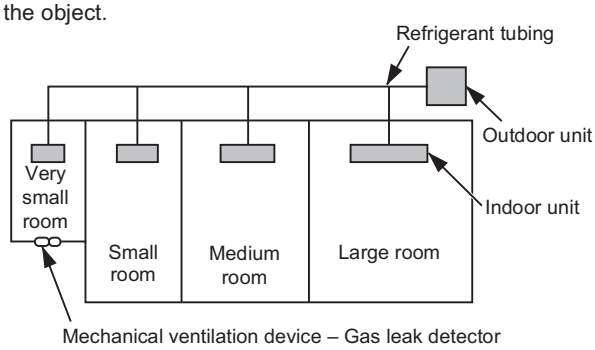

3. The minimum indoor floor space compared with the amount of refrigerant is roughly as follows (for room with 2.7 m high ceiling):

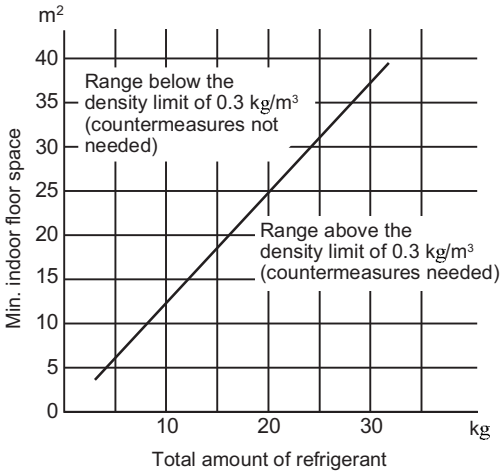

IMPORTANT INFORMATION REGARDING THE REFRIGERANT USED

This product contains fluorinated greenhouse gases covered by the Kyoto Protocol. Do not vent gases into the atmosphere.

Refrigerant type: R410A
GWP[1] value: 1975
[1] GWP = global warming potential

Periodical inspections for refrigerant leaks may be required depending on European or local legislation.
Please contact your local dealer for more information.

Please fill in with indelible ink,
- ① the factory refrigerant charge of the product
- ② the additional refrigerant amount charged in the field and
- ① +② the total refrigerant charge

on the refrigerant charge label supplied with the product.

The filled out label must be adhered in the proximity of the product charging port (e.g. onto the inside of the service cover).

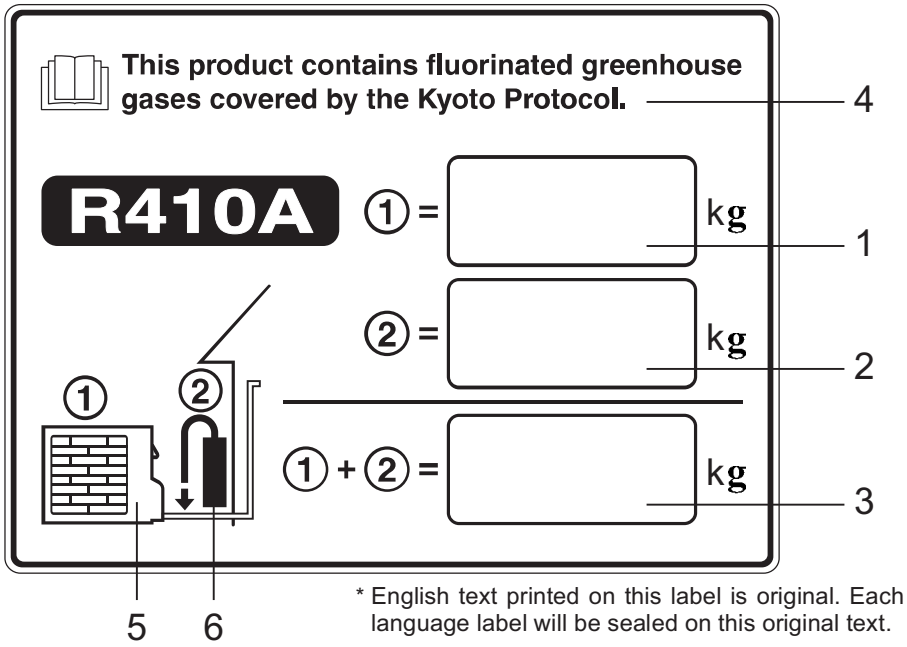

* English text printed on this label is original. Each language label will be sealed on this original text.

1. Factory refrigerant charge of the product: see unit name plate
2. Additional refrigerant amount charged in the field
3. Total refrigerant charge
4. Contains fluorinated greenhouse gases covered by the Kyoto Protocol
5. Outdoor unit
6. Refrigerant cylinder and manifold for charging

Combination of Indoor and Outdoor Units

PE1

Single-phase

	36	45	50	60	71	100	125	140
U1	S-36PU1E5A x2 U-71PE1E5A P2	S-45PU1E5A x3 U-125PE1E5A P5	S-50PU1E5A U-50PE1E5 P6	S-60PU1E5A U-60PE1E5A P9	S-71PU1E5A U-71PE1E5A P11	S-100PU1E5A U-100PE1E5A P13	S-125PU1E5A U-125PE1E5A P14	S-140PU1E5A U-140PE1E5A P15
	S-36PU1E5A x3 U-100PE1E5A P3		S-50PU1E5A x2 U-100PE1E5A P7	S-60PU1E5A x2 U-125PE1E5A P10	S-71PU1E5A x2 U-140PE1E5A P12			
	S-36PU1E5A x4 U-125PE1E5A P4		S-50PU1E5A x3 U-140PE1E5A P8					
T2	S-36PT2E5A x2 U-71PE1E5A P28	S-45PT2E5A x3 U-125PE1E5A P31	S-50PT2E5A U-50PE1E5 P32	S-60PT2E5A U-60PE1E5A P35	S-71PT2E5A U-71PE1E5A P37	S-100PT2E5A U-100PE1E5A P39	S-125PT2E5A U-125PE1E5A P40	S-140PT2E5A U-140PE1E5A P41
	S-36PT2E5A x3 U-100PE1E5A P29		S-50PT2E5A x2 U-100PE1E5A P33	S-60PT2E5A x2 U-125PE1E5A P36	S-71PT2E5A x2 U-140PE1E5A P38			
	S-36PT2E5A x4 U-125PE1E5A P30		S-50PT2E5A x3 U-140PE1E5A P34					
K1	S-36PK1E5A x2 U-71PE1E5A P54	S-45PK1E5A x3 U-125PE1E5A P57	S-50PK1E5A U-50PE1E5 P58	S-60PK1E5A U-60PE1E5A P61	S-71PK1E5A U-71PE1E5A P63	S-100PK1E5A U-100PE1E5A P65		
	S-36PK1E5A x3 U-100PE1E5A P55		S-50PK1E5A x2 U-100PE1E5A P59	S-60PK1E5A x2 U-125PE1E5A P62	S-71PK1E5A x2 U-140PE1E5A P64			
	S-36PK1E5A x4 U-125PE1E5A P56		S-50PK1E5A x3 U-140PE1E5A P60					
F1	S-36PF1E5A x2 U-71PE1E5A P76	S-45PF1E5A x3 U-125PE1E5A P79	S-50PF1E5A U-50PE1E5 P80	S-60PF1E5A U-60PE1E5A P83	S-71PF1E5A U-71PE1E5A P85	S-100PF1E5A U-100PE1E5A P87	S-125PF1E5A U-125PE1E5A P88	S-140PF1E5A U-140PE1E5A P89
	S-36PF1E5A x3 U-100PE1E5A P77		S-50PF1E5A x2 U-100PE1E5A P81	S-60PF1E5A x2 U-125PE1E5A P84	S-71PF1E5A x2 U-140PE1E5A P86			
	S-36PF1E5A x4 U-125PE1E5A P78		S-50PF1E5A x3 U-140PE1E5A P82					
N1	S-36PN1E5A x2 U-71PE1E5A P102	S-45PN1E5A x3 U-125PE1E5A P105	S-50PN1E5A U-50PE1E5 P106	S-60PN1E5A U-60PE1E5A P109	S-71PN1E5A U-71PE1E5A P111	S-100PN1E5A U-100PE1E5A P113	S-125PN1E5A U-125PE1E5A P114	S-140PN1E5A U-140PE1E5A P115
	S-36PN1E5A x3 U-100PE1E5A P103		S-50PN1E5A x2 U-100PE1E5A P107	S-60PN1E5A x2 U-125PE1E5A P110	S-71PN1E5A x2 U-140PE1E5A P112			
	S-36PN1E5A x4 U-125PE1E5A P104		S-50PN1E5A x3 U-140PE1E5A P108					

Combination of Indoor and Outdoor Units

PE1

3-phase

	36	45	50	60	71	100	125	140
U1	S-36PU1E5A x2 U-71PE1E8A P16	S-45PU1E5A x3 U-125PE1E8A P19	S-50PU1E5A x2 U-100PE1E8A P20	S-60PU1E5A x2 U-125PE1E8A P22	S-71PU1E5A U-71PE1E8A P23	S-100PU1E5A U-100PE1E8A P25	S-125PU1E5A U-125PE1E8A P26	S-140PU1E5A U-140PE1E8A P27
	S-36PU1E5A x3 U-100PE1E8A P17		S-50PU1E5A x3 U-140PE1E8A P21		S-71PU1E5A x2 U-140PE1E8A P24			
	S-36PU1E5A x4 U-125PE1E8A P18							
T2	S-36PT2E5A x2 U-71PE1E8A P42	S-45PT2E5A x3 U-125PE1E8A P45	S-50PT2E5A x2 U-100PE1E8A P46	S-60PT2E5A x2 U-125PE1E8A P48	S-71PT2E5A U-71PE1E8A P49	S-100PT2E5A U-100PE1E8A P51	S-125PT2E5A U-125PE1E8A P52	S-140PT2E5A U-140PE1E8A P53
	S-36PT2E5A x3 U-100PE1E8A P43		S-50PT2E5A x3 U-140PE1E8A P47		S-71PT2E5A x2 U-140PE1E8A P50			
	S-36PT2E5A x4 U-125PE1E8A P44							
K1	S-36PK1E5A x2 U-71PE1E8A P66	S-45PK1E5A x3 U-125PE1E8A P69	S-50PK1E5A x2 U-100PE1E8A P70	S-60PK1E5A x2 U-125PE1E8A P72	S-71PK1E5A U-71PE1E8A P73	S-100PK1E5A U-100PE1E8A P75		
	S-36PK1E5A x3 U-100PE1E8A P67		S-50PK1E5A x3 U-140PE1E8A P71		S-71PK1E5A x2 U-140PE1E8A P74			
	S-36PK1E5A x4 U-125PE1E8A P68							
F1	S-36PF1E5A x2 U-71PE1E8A P90	S-45PF1E5A x3 U-125PE1E8A P93	S-50PF1E5A x2 U-100PE1E8A P94	S-60PF1E5A x2 U-125PE1E8A P96	S-71PF1E5A U-71PE1E8A P97	S-100PF1E5A U-100PE1E8A P99	S-125PF1E5A U-125PE1E8A P100	S-140PF1E5A U-140PE1E8A P101
	S-36PF1E5A x3 U-100PE1E8A P91		S-50PF1E5A x3 U-140PE1E8A P95		S-71PF1E5A x2 U-140PE1E8A P98			
	S-36PF1E5A x4 U-125PE1E8A P92							
N1	S-36PN1E5A x2 U-71PE1E8A P116	S-45PN1E5A x3 U-125PE1E8A P119	S-50PN1E5A x2 U-100PE1E8A P120	S-60PN1E5A x2 U-125PE1E8A P122	S-71PN1E5A U-71PE1E8A P123	S-100PN1E5A U-100PE1E8A P125	S-125PN1E5A U-125PE1E8A P126	S-140PN1E5A U-140PE1E8A P127
	S-36PN1E5A x3 U-100PE1E8A P117		S-50PN1E5A x3 U-140PE1E8A P121		S-71PN1E5A x2 U-140PE1E8A P124			
	S-36PN1E5A x4 U-125PE1E8A P118							

Combination of Indoor and Outdoor Units

PEY1

Single-phase

	36	50	60	71	100	125	140
U1	S-36PU1E5A x2 U-71PEY1E5 P128	S-50PU1E5A x2 U-100PEY1E5 P129	S-60PU1E5A U-60PEY1E5 P130	S-71PU1E5A U-71PEY1E5 P132	S-100PU1E5A U-100PEY1E5 P133	S-125PU1E5A U-125PEY1E5 P134	
			S-60PU1E5A x2 U-125PEY1E5 P131				
T2	S-36PT2E5A x2 U-71PEY1E5 P141	S-50PT2E5A x2 U-100PEY1E5 P142	S-60PT2E5A U-60PEY1E5 P143	S-71PT2E5A U-71PEY1E5 P145	S-100PT2E5A U-100PEY1E5 P146	S-125PT2E5A U-125PEY1E5 P147	
			S-60PT2E5A x2 U-125PEY1E5 P144				
K1	S-36PK1E5A x2 U-71PEY1E5 P154	S-50PK1E5A x2 U-100PEY1E5 P155	S-60PK1E5A U-60PEY1E5 P156	S-71PK1E5A U-71PEY1E5 P158	S-100PK1E5A U-100PEY1E5 P159		
			S-60PK1E5A x2 U-125PEY1E5 P157				
F1	S-36PF1E5A x2 U-71PEY1E5 P164	S-50PF1E5A x2 U-100PEY1E5 P165	S-60PF1E5A U-60PEY1E5 P166	S-71PF1E5A U-71PEY1E5 P168	S-100PF1E5A U-100PEY1E5 P169	S-125PF1E5A U-125PEY1E5 P170	
			S-60PF1E5A x2 U-125PEY1E5 P167				
N1	S-36PN1E5A x2 U-71PEY1E5 P177	S-50PN1E5A x2 U-100PEY1E5 P178	S-60PN1E5A U-60PEY1E5 P179	S-71PN1E5A U-71PEY1E5 P181	S-100PN1E5A U-100PEY1E5 P182	S-125PN1E5A U-125PEY1E5 P183	
			S-60PN1E5A x2 U-125PEY1E5 P180				

3-phase

	36	50	60	71	100	125	140
U1		S-50PU1E5A x2 U-100PEY1E8 P135	S-60PU1E5A x2 U-125PEY1E8 P136	S-71PU1E5A x2 U-140PEY1E8 P137	S-100PU1E5A U-100PEY1E8 P138	S-125PU1E5A U-125PEY1E8 P139	S-140PU1E5A U-140PEY1E8 P140
T2		S-50PT2E5A x2 U-100PEY1E8 P148	S-60PT2E5A x2 U-125PEY1E8 P149	S-71PT2E5A x2 U-140PEY1E8 P150	S-100PT2E5A U-100PEY1E8 P151	S-125PT2E5A U-125PEY1E8 P152	S-140PT2E5A U-140PEY1E8 P153
K1		S-50PK1E5A x2 U-100PEY1E8 P160	S-60PK1E5A x2 U-125PEY1E8 P161	S-71PK1E5A x2 U-140PEY1E8 P162	S-100PK1E5A U-100PEY1E8 P163		
F1		S-50PF1E5A x2 U-100PEY1E8 P171	S-60PF1E5A x2 U-125PEY1E8 P172	S-71PF1E5A x2 U-140PEY1E8 P173	S-100PF1E5A U-100PEY1E8 P174	S-125PF1E5A U-125PEY1E8 P175	S-140PF1E5A U-140PEY1E8 P176
N1		S-50PN1E5A x2 U-100PEY1E8 P184	S-60PN1E5A x2 U-125PEY1E8 P185	S-71PN1E5A x2 U-140PEY1E8 P186	S-100PN1E5A U-100PEY1E8 P187	S-125PN1E5A U-125PEY1E8 P188	S-140PN1E5A U-140PEY1E8 P189

CONTENTS

Section 1. SPECIFICATIONS 1-1
1-1. Unit Specifications 1-2
1-2. Dimensional Data 1-241
1-3. Refrigerant Flow Diagram 1-255
1-4. Operating Range 1-258
1-5. Capacity Correction Graph According to Temperature Condition 1-259
1-6. Noise Criterion Curves 1-270
1-7. Indoor Fan Performance 1-287
1-8. Airflow Distance Chart 1-288
1-9. Intaking Fresh Air of 4-Way Cassette Type 1-293
1-10. Electrical Wiring 1-295
1-11. Installation Instructions 1-300
■ Outdoor Unit 1-300
■ Indoor Unit 1-377
1-12. How to select AHU system 1-439
1-13. Capacity Table 1-443
1. Cooling Capacity Performance Data 1-443
2. Heating Capacity Performance Data 1-486
1-14. Product Fiche 1-513
Section 2. TEST RUN 2-1
■ PRECAUTIONS REGARDING TEST RUN 2-2
■ CHECKS AFTER INSTALLATION HAVE COMPLETED 2-3
■ REGARDING DELIVERY TO THE CUSTOMER 2-3
Section 3. ELECTRICAL DATA 3-1
3-1. Indoor Units (Electric Wiring Diagram, Schematic Diagram) 3-2
3-2. Outdoor Units (Electric Wiring Diagram) 3-11
Section 4. CONTROL FUNCTIONS 4-1
4-1. Room Temperature Control 4-2
4-2. Heating Standby 4-4
4-3. Automatic Fan Speed Control 4-5
4-4. Drain Pump Control 4-6
4-5. Automatic Heating/Cooling Control 4-7
4-6. Automatic Flap Control 4-8
4-7. Filter Sign 4-8
4-8. Fan Control during Dry Mode 4-9
4-9. Ventilation Fan Output 4-9
4-10. T10 Terminal 4-9
4-11. Parameter 4-10
4-12. Outdoor Units Control PCB 4-11
4-13. Functions of Outdoor Unit PCB 4-19
4-14. Self-Diagnostics Function Table 4-22
Section 5. TROUBLE DIAGNOSIS 5-1
5-1. Contents of Remote Controller Switch Alarm Display 5-2
5-2. Outdoor Unit Control Panel LED Display 5-4
5-3. PAC System Alarm Codes 5-5
5-4. Inspection of Parts (Outdoor Unit) 5-68
5-5. Symptom: Thermostat in OFF continues or cycles OFF & ON too frequently 5-69
5-6. How to Clean Heat Exchanger 5-70
5-7. How to Replace Fan Motor 5-71

Section 6. OUTDOOR UNIT MAINTENANCE REMOTE CONTROL 6-1
6-1. Overview 6-2
6-2. Functions..... 6-2
6-3. Normal Display Operations and Functions 6-3
6-4. Monitoring Operations: Display of Indoor Unit and Outdoor Unit Sensor Temperatures 6-6
6-5. Monitoring the Outdoor Unit Alarm History: Display of Outdoor Unit Alarm History 6-7
6-6. Settings Modes: Setting the Outdoor Unit EEPROM 6-7
Section 7. REMOTE CONTROLLER FUNCTIONS SECTION..... 7-1
7-1. Simple Settings Function 7-2
7-2. List of Simple Setting Items..... 7-3
7-3. Detailed Settings Function 7-4
7-4. List of Detailed Setting Items 7-5
7-5. Simple Setting Items 7-9
7-6. Detaild Setting Items 7-11
7-7. Remote Controller Servicing Functions 7-15
7-8. Test Run Function 7-15
Section 8. HOW TO INSTALL THE WIRELESS REMOTE CONTROLLER RECEIVER 8-1
■ Important Safety Instructions 8-2
■ Optional Controller (Remote Controller) 8-3
8-1. Names and Functions 8-3
8-2. Installing Batteries 8-5
8-3. Setting the Current Time 8-5
8-4. Operation 8-6
8-5. Timer Operation 8-7
8-6. Adjusting the Wind Direction 8-8
8-7. Operating Multiple In/Outdoor Units Simultaneously (Group Control) 8-8
8-8. Using the Remote Control 8-9
8-9. For Best Results 8-9
8-10. Addresses 8-9
8-11. Emergency Operation 8-11
8-12. Miscellaneous Settings 8-12
8-13. Before Requesting Service 8-13
■ How to Install the Wireless Remote Controller Receiver 8-14
8-14. Common to All Models 8-14
8-15. CZ-RWSU2 8-16
8-16. CZ-RWST2..... 8-18
8-17. CZ-RWSL2 8-21
8-18. CZ-RWSC2 8-24
8-19. CZ-RWSY2 8-28
8-20. CZ-RWST3 8-30
8-21. Common to All Models 8-32

1. SPECIFICATIONS

1-1. Unit Specifications 1-2

PE1

1. 4-Way Cassette Type (U1) 1-2
2. Ceiling Type (T2) 1-28
3. Wall Mounted Type (K1) 1-54
4. Low Silhouette Ducted Type (F1) 1-76
5. Ducted Type (N1) 1-102

PEY1

1. 4-Way Cassette Type (U1) 1-128
2. Ceiling Type (T2) 1-141
3. Wall Mounted Type (K1) 1-154
4. Low Silhouette Ducted Type (F1) 1-164
5. Ducted Type (N1) 1-177

1-2. Dimensional Data 1-190

(A) Indoor Units 1-190
(B) Outdoor Units 1-199

1-3. Refrigerant Flow Diagram 1-202

1-4. Operating Range 1-205

1-5. Capacity Correction Graph According to Temperature Condition 1-206

1-6. Noise Criterion Curves 1-217

1-7. Indoor Fan Performance 1-232

1-8. Airflow Distance Chart 1-233

1-9. Fresh Air Intake 1-242

1-10. Electrical Wiring 1-247

1-11. Installation Instructions 1-252

Outdoor Unit 1-252

■ U-50PE1E5, U-60PEY1E5, U-71PEY1E5 1-252
■ U-60PE1E5A □U-140PE1E5A, U-71PE1E8A □U-140PE1E8A
U-100PEY1E5, U-125PEY1E5, U-100PEY1E8, U-125PEY1E8, U-140PEY1E8 1-301

Indoor Unit 1-321

1. 4-Way Cassette Type (U1) 1-321
2. Ceiling Type (T2) 1-333
3. Wall Mounted Type (K1) 1-339
4. Low Silhouette Ducted Type (F1) 1-348
5. Ducted Type (N1) 1-360

1-12. How to select AHU system 1-372

1-13. Capacity Table 1-376

1. Cooling Capacity Performance Data 1-376
2. Heating Capacity Performance Data 1-408

1-14. Product Fiche 1-428

Simultaneous (Twin) -Type

1-1. Unit Speci□cations

PE1

1. 4-Way Cassette Type S-36PU1E5A×2 / U-71PE1E5A

INDOOR		MODEL	S-36PU1E5A×2							
PANEL		MODEL	CZ-KPU21×2			-				
OUTDOOR		MODEL				U-71PE1E5A				
Branch pipe		MODEL	CZ-P155BK1							
PERFORMANCE TEST CONDITION			ISO5151 / EN14511 / EN14825 / EN12102							
POWER SUPPLY		ø, Hz	1ø 50Hz			1ø 50Hz				
		V	220	230	240	220	230	240	Min	Max
COOLING	CAPACITY	kW	7.1	7.1	7.1				2.5	8.2
		BTU/h	24200	24200	24200				8500	28000
	CURRENT	A	0.19×2	0.19×2	0.18×2	8.40	8.10	7.90	-	-
	INPUT POWER	W	20×2	20×2	20×2	1.760k	1.760k	1.760k	-	-
		TOTAL W		-		1.800k	1.800k	1.800k	450	2.700k
	ANNUAL CONSUMPTION	TOTAL kWh ※4		-		-	900	-	-	-
	EER/EER CLASS	TOTAL(W/W)※5/("A"~"G")	-	-	-	3.94	3.94 / A	3.94	5.56	3.04
	Erp ※6	Pdsign kW	-	-	-	-	7.1	-		
		SEER (W/W)	-	-	-	-	7.4	-		
		Annual consumption kWh	-	-	-	-	336	-		
		Class	-	-	-	-	A++	-		
	POWER FACTOR	%	-	-	-	95	94	93	-	-
	NOISE INDOOR (H/M/L)	dB-A		30/28/27						
		Power Level dB		47/45/44						
	NOISE OUTDOOR (H/L)	dB-A					48/-			
		Power Level dB					65/-			
HEATING	CAPACITY	kW	8.0	8.0	8.0				2.0	9.0
		BTU/h	27300	27300	27300				6800	30700
	CURRENT	A	0.17×2	0.17×2	0.16×2	9.30	9.00	8.70	-	-
	INPUT POWER	W	20×2	20×2	20×2	1.960k	1.960k	1.960k	-	-
		TOTAL W		-		2.000k	2.000k	2.000k	400	2.900k
	COP/COP CLASS	TOTAL(W/W)※5/("A"~"G")	-	-	-	4.00	4.00 / A	4.00	5.00	3.10
	Erp ※6	Pdsign kW	-	-	-	-	7.1	-		
		Tbivalen °C	-	-	-	-	-8	-		
		SCOP (W/W)	-	-	-	-	4.1	-		
		Annual consumption kWh	-	-	-	-	2424	-		
		Class	-	-	-	-	A+	-		
	POWER FACTOR	%	-	-	-	96	95	94	-	-
	NOISE INDOOR (H/M/L)	dB-A		30/28/27			-		/	/
		Power Level dB		47/45/44			-			
	NOISE OUTDOOR (H/L)	dB-A		-			50/-		/	/
		Power Level dB		-			67/-			
EXTRA LOW TEMP	Total CAPACITY(kW)/INPUT POWER(W)/COP					-				
MAX CURRENT(A)/MAX INPUT POWER(W)			0.19×2/20×2	0.19×2/20×2	0.18×2/20×2	18.0/3.800k	18.0/3.930k	18.0/4.060k	/	
STARTING CURRENT(A)/COMP OUTPUT(W)			-	-	-	9.30/2.0k	9.00/2.0k	8.70/2.0k	/	
NETWORK IMPEDANCE (ΩMAX.)				-			-			
FM OUTPUT (W)				60×2			90		/	
MOISTURE REMOVAL VOLUME		L/h(Pt/h)	4.2	(2.1×2)	(8.8)		-			
External static pressure		Pa		-						
I/D AIR FLOW	COOL	m^3/min (ft^3/min)		[14/13/12 (494/459/424)]×2						
	HEAT	m^3/min (ft^3/min)		[14/13/12 (494/459/424)]×2						
O/D AIR FLOW	COOL	m^3/min (ft^3/min)				60		(2119)		
	HEAT	m^3/min (ft^3/min)				60		(2119)		
REFRIGERANT TYPE, AMOUNT g(oz)						R410A	2.35k	(82.9)	/	
PROD	HEIGHT : H mm(inch)			256 (10-3/32)			996 (39-7/32)		/	
	WIDTH : W mm(inch)			840 (33-3/32)			940 (37-1/32)		/	
	DEPTH : D mm(inch)			840 (33-3/32)			340 (13-13/32)		/	
PACK	HEIGHT : H mm			298			1136		/	
	WIDTH : W mm			929			1055		/	
	DEPTH : D mm			929			485		/	
MASS	(NET) kg(lb)			23 (51)			69 (152)		/	
	(GROSS) kg(lb)			29 (64)			77 (170)		/	
LAYERS LIMIT (actually)				11 (12)			2 (3)			
Operation Condition		Cool (DBT)		18°C ~ 32°C			-15°C ~ 46°C			
		Heat (DBT)		16°C ~ 30°C			-20°C ~ 24°C			
PIPING	PIPE DIAMETER mm (inch)		(Liquid)ø6.35(1/4) (Gas)ø12.7(1/2)			(Liquid)ø9.52(3/8) (Gas)ø15.88(5/8)				
	CONNECT METHOD, STD LENGTH m (ft)		flared type, 5.0(16.4)			flared type, 5.0(16.4)				
	PIPE LENGTH RANGE m (ft)		5 ~ 50 (16.4 ~ 164.0)						~	~
	I/D&O/D HEIGHT DIFFERENCE m (ft)		15 (OD located lower) / 30 (OD located higher) (49.2/98.4)							
	ADD GAS AMOUNT g/m (oz/ft)		50 (0.538)							
	PIPE LENGTH FOR ADDITIONAL GAS m (ft)		30 (98.4)							

*1: In case it is necessary to indicate the air □ow volume in (l/s), the value in (m^3/min.) shall be multiplied by 16.7 and rounded down the decimal point.
*2: If the EUROVENT Certi□ed models can be operated under the □extra-low□temperature condition, -7□C dry bulb and -8□C wet-bulb temperatures with rated voltage 230 V shall be used.
*3: Network Impedance shall be applicable for EUROPE and CHINA models.
*4: The annual consumption is calculated by multiplying the input power at 230 V (400 V) by an average of 500 hours per year in cooling mode.
*5: EER and COP classification is at 230 V (400 V) only in accordance with EU directive 2002/31/EC.
*6: SEER and SCOP classification is at 230V(400V) only in accordance with EN-14825. For heating, SCOP indicates the value of only Average heating season, Other fiche data indicates in an attached sheet.

Simultaneous (Triple) -Type

1-1. Unit Specifications

PE1

1. 4-Way Cassette Type S-36PU1E5A×3 / U-100PE1E5A

INDOOR		MODEL	S-36PU1E5A×3							
PANEL		MODEL	CZ-KPU21×3			-				
OUTDOOR		MODEL				U-100PE1E5A				
Branch pipe		MODEL	CZ-P3HPC2							
PERFORMANCE TEST CONDITION			ISO5151 / EN14511 / EN14825 / EN12102							
POWER SUPPLY		ø, Hz	1ø 50Hz			1ø 50Hz				
		V	220	230	240	220	230	240	Min	Max
COOLING	CAPACITY	kW	10.0	10.0	10.0				3.3	12.5
		BTU/h	34100	34100	34100				11300	42700
	CURRENT	A	0.19×3	0.19×3	0.18×3	10.9	10.5	10.1	-	-
	INPUT POWER	W	20×3	20×3	20×3	2.320k	2.320k	2.320k	-	-
		TOTAL W		-		2.380k	2.380k	2.380k	840	3.700k
	ANNUAL CONSUMPTION	TOTAL kWh ※4		-		-	1190	-	-	-
	EER/EER CLASS	TOTAL(W/W)※5("A"~"G")	-	-	-	4.20	4.20 / A	4.20	3.93	3.38
	Erp ※6 Pdsign	kW	-	-	-	-	10.0	-		
	Erp ※6 SEER	(W/W)	-	-	-	-	6.6	-		
	Erp ※6 Annual consumption	kWh	-	-	-	-	530	-		
	Erp ※6 Class		-	-	-	-	A++	-		
	POWER FACTOR	%	-	-	-	97	96	96	-	-
	NOISE INDOOR (H/M/L)	dB-A		30/28/27						
		Power Level dB		47/45/44						
	NOISE OUTDOOR (H/L)	dB-A					52/-			
		Power Level dB					69/-			
HEATING	CAPACITY	kW	11.2	11.2	11.2				4.1	14.0
		BTU/h	38200	38200	38200				14000	47800
	CURRENT	A	0.17×3	0.17×3	0.16×3	11.9	11.5	11.1	-	-
	INPUT POWER	W	20×3	20×3	20×3	2.540k	2.540k	2.540k	-	-
		TOTAL W		-		2.600k	2.600k	2.600k	900	4.400k
	COP/COP CLASS	TOTAL(W/W)※5("A"~"G")	-	-	-	4.31	4.31 / A	4.31	4.56	3.18
	Erp ※6 Pdsign	kW	-	-	-	-	10.0	-	-	-
	Erp ※6 Tbivalen	°C	-	-	-	-	-10	-		
	Erp ※6 SCOP	(W/W)	-	-	-	-	4.2	-		
	Erp ※6 Annual consumption	kWh	-	-	-	-	3333	-		
	Erp ※6 Class		-	-	-	-	A+	-		
	POWER FACTOR	%	-	-	-	97	96	95	-	-
	NOISE INDOOR (H/M/L)	dB-A		30/28/27			-		/	/
		Power Level dB		47/45/44			-			
	NOISE OUTDOOR (H/L)	dB-A		-			52/-		/	/
		Power Level dB		-			69/-			
EXTRA LOW TEMP	Total CAPACITY(kW)/INPUT POWER(W)/COP					-				
MAX CURRENT(A)/MAX INPUT POWER(W)			0.19×3/20×3	0.19×3/20×3	0.18×3/20×3	25.0/5.350k	25.0/5.550k	25.0/5.750k	/	
STARTING CURRENT(A)/COMP OUTPUT(W)			-	-	-	11.9/3.0k	11.5/3.0k	11.1/3.0k	/	
NETWORK IMPEDANCE (ΩMAX.)				-			-			
FM OUTPUT (W)				60×3			90x2		/	
MOISTURE REMOVAL VOLUME		L/h(Pt/h)	6.0	(2.0×3)	(12.6)		-			
External static pressure		Pa		-						
I/D AIR FLOW	COOL	m^3/min (ft^3/min)		[14/13/12 (494/459/424)]×3						
	HEAT	m^3/min (ft^3/min)		[14/13/12 (494/459/424)]×3						
O/D AIR FLOW	COOL	m^3/min (ft^3/min)				110		(3885)		
	HEAT	m^3/min (ft^3/min)				95		(3355)		
REFRIGERANT TYPE, AMOUNT g(oz)						R410A	3.40k	(119.9)	/	
PROD IM	HEIGHT : H mm(inch)			256 (10-3/32)			1416 (55-3/4)		/	
	WIDTH : W mm(inch)			840 (33-3/32)			940 (37-1/32)		/	
	DEPTH : D mm(inch)			840 (33-3/32)			340 (13-13/32)		/	
PACK IM	HEIGHT : H mm			298			1556		/	
	WIDTH : W mm			929			1055		/	
	DEPTH : D mm			929			485		/	
MASS	(NET) kg(lb)			23 (51)			98 (216)		/	
	(GROSS) kg(lb)			29 (64)			108 (238)		/	
LAYERS LIMIT (actually)				11 (12)			1 (2)			
Operation Condition		Cool (DBT)		18°C ~ 32°C			-15°C ~ 46°C			
		Heat (DBT)		16°C ~ 30°C			-20°C ~ 24°C			
PIPING	PIPE DIAMETER mm (inch)		(Liquid)ø6.35(1/4) (Gas)ø12.7(1/2)			(Liquid)ø9.52(3/8) (Gas)ø15.88(5/8)				
	CONNECT METHOD, STD LENGTH m (ft)		flared type, 5.0(16.4)			flared type, 5.0(16.4)				
	PIPE LENGTH RANGE m (ft)			5 ~ 75 (16.4 ~ 246.1)					~	~
	I/D&O/D HEIGHT DIFFERENCE m (ft)		15 (OD located lower) / 30 (OD located higher) (49.2/98.4)							
	ADD GAS AMOUNT g/m (oz/ft)			50 (0.538)						
	PIPE LENGTH FOR ADDITIONAL GAS m (ft)			20 (65.6)						

*1: In case it is necessary to indicate the air flow volume in (l/s), the value in (m^3/min.) shall be multiplied by 16.7 and rounded down the decimal point.
*2: If the EUROVENT Certified models can be operated under the "extra-low" temperature condition, -7°C dry bulb and -8°C wet-bulb temperatures with rated voltage 230 V shall be used.
*3: Network Impedance shall be applicable for EUROPE and CHINA models.
*4: The annual consumption is calculated by multiplying the input power at 230 V (400 V) by an average of 500 hours per year in cooling mode.
*5: EER and COP classification is at 230 V (400 V) only in accordance with EU directive 2002/31/EC.
*6: SEER and SCOP classification is at 230V(400V) only in accordance with EN-14825. For heating, SCOP indicates the value of only Average heating season, Other fiche data indicates in an attached sheet.

Simultaneous (Double-Twin) -Type

1-1. Unit Speci□cations

PE1

1. 4-Way Cassette Type S-36PU1E5A×4 / U-125PE1E5A

INDOOR		MODEL	S-36PU1E5A×4							
PANEL		MODEL	CZ-KPU21×4			-				
OUTDOOR		MODEL				U-125PE1E5A				
Branch pipe		MODEL	CZ-P155BK1×3							
PERFORMANCE TEST CONDITION			ISO5151 / EN14511 / EN12102							
POWER SUPPLY		ø, Hz	1ø 50Hz			1ø 50Hz				
		V	220	230	240	220	230	240	Min	Max
COOLING	CAPACITY	kW	12.5	12.5	12.5				3.3	14.0
		BTU/h	42700	42700	42700				11300	47800
	CURRENT	A	0.19×4	0.19×4	0.18×4	15.9	15.4	14.9	-	-
	INPUT POWER	W	20×4	20×4	20×4	3.390k	3.390k	3.390k	-	-
		TOTAL W		-		3.470k	3.470k	3.470k	840	4.600k
	ANNUAL CONSUMPTION	TOTAL kWh ※4		-		-	1735	-	-	-
	EER/EER CLASS	TOTAL(W/W)※5/("A"~"G")	-	-	-	3.60	3.60 / A	3.60	3.93	3.04
	Erp ※6 Pdsign	kW	-	-	-	-	-	-		
	Erp ※6 SEER	(W/W)	-	-	-	-	-	-		
	Erp ※6 Annual consumption	kWh	-	-	-	-	-	-		
	Erp ※6 Class		-	-	-	-	-	-		
	POWER FACTOR	%	-	-	-	97	96	95	-	-
	NOISE INDOOR (H/M/L)	dB-A		30/28/27						
		Power Level dB		47/45/44						
	NOISE OUTDOOR (H/L)	dB-A					53/-			
		Power Level dB					70/-			
HEATING	CAPACITY	kW	14.0	14.0	14.0				4.1	16.0
		BTU/h	47800	47800	47800				14000	54600
	CURRENT	A	0.17×4	0.17×4	0.16×4	16.0	15.5	15.0	-	-
	INPUT POWER	W	20×4	20×4	20×4	3.420k	3.420k	3.420k	-	-
		TOTAL W		-		3.500k	3.500k	3.500k	900	5.200k
	COP/COP CLASS	TOTAL(W/W)※5/("A"~"G")	-	-	-	4.00	4.00 / A	4.00	4.56	3.08
	Erp ※6 Pdsign	kW	-	-	-	-	-	-	-	-
	Erp ※6 Tbivalen	°C	-	-	-	-	-	-		
	Erp ※6 SCOP	(W/W)	-	-	-	-	-	-		
	Erp ※6 Annual consumption	kWh	-	-	-	-	-	-		
	Erp ※6 Class		-	-	-	-	-	-		
	POWER FACTOR	%	-	-	-	97	96	95	-	-
	NOISE INDOOR (H/M/L)	dB-A		30/28/27			-		/	/
		Power Level dB		47/45/44			-			
	NOISE OUTDOOR (H/L)	dB-A		-			53/-		/	/
		Power Level dB		-			70/-			
EXTRA LOW TEMP	Total CAPACITY(kW)/INPUT POWER(W)/COP					-				
MAX CURRENT(A)/MAX INPUT POWER(W)			0.19×4/20×4	0.19×4/20×4	0.18×4/20×4	28.0/6.000k	28.0/6.200k	28.0/6.400k	/	
STARTING CURRENT(A)/COMP OUTPUT(W)			-	-	-	16.0/3.0k	15.5/3.0k	15.0/3.0k	/	
NETWORK IMPEDANCE (ΩMAX.)				-			-			
FM OUTPUT (W)				60×4			90x2		/	
MOISTURE REMOVAL VOLUME		L/h(Pt/h)	7.9	(1.98×4)	(16.6)		-			
External static pressure		Pa		-						
I/D AIR FLOW	COOL	m^3/min (ft^3/min)		[14/13/12 (494/459/424)]×4						
	HEAT	m^3/min (ft^3/min)		[14/13/12 (494/459/424)]×4						
O/D AIR FLOW	COOL	m^3/min (ft^3/min)				130		(4591)		
	HEAT	m^3/min (ft^3/min)				110		(3885)		
REFRIGERANT TYPE, AMOUNT g(oz)						R410A	3.40k	(119.9)	/	
PROD DIM	HEIGHT : H mm(inch)			256 (10-3/32)			1416 (55-3/4)		/	
	WIDTH : W mm(inch)			840 (33-3/32)			940 (37-1/32)		/	
	DEPTH : D mm(inch)			840 (33-3/32)			340 (13-13/32)		/	
PACK DIM	HEIGHT : H mm			298			1556		/	
	WIDTH : W mm			929			1055		/	
	DEPTH : D mm			929			485		/	
MASS	(NET) kg(lb)			23 (51)			98 (216)		/	
	(GROSS) kg(lb)			29 (64)			108 (238)		/	
LAYERS LIMIT (actually)				11 (12)			1 (2)			
Operation Condition		Cool (DBT)		18°C ~ 32°C			-15°C ~ 46°C			
		Heat (DBT)		16°C ~ 30°C			-20°C ~ 24°C			
PIPING	PIPE DIAMETER mm (inch)		(Liquid)ø6.35(1/4) (Gas)ø12.7(1/2)			(Liquid)ø9.52(3/8) (Gas)ø15.88(5/8)				
	CONNECT METHOD, STD LENGTH m (ft)		flared type, 5.0(16.4)			flared type, 5.0(16.4)				
	PIPE LENGTH RANGE m (ft)		5 ~ 75 (16.4 ~ 246.1)						~	~
	I/D&O/D HEIGHT DIFFERENCE m (ft)		15 (OD located lower) / 30 (OD located higher) (49.2/98.4)							
	ADD GAS AMOUNT g/m (oz/ft)		50 (0.538)							
	PIPE LENGTH FOR ADDITIONAL GAS m (ft)		20 (65.6)							

*1: In case it is necessary to indicate the air □ow volume in (l/s), the value in (m^3/min.) shall be multiplied by 16.7 and rounded down the decimal point.
*2: If the EUROVENT Certi□ed models can be operated under the □extra-low□temperature condition, -7□C dry bulb and -8□C wet-bulb temperatures with rated voltage 230 V shall be used.
*3: Network Impedance shall be applicable for EUROPE and CHINA models.
*4: The annual consumption is calculated by multiplying the input power at 230 V (400 V) by an average of 500 hours per year in cooling mode.
*5: EER and COP classification is at 230 V (400 V) only in accordance with EU directive 2002/31/EC.
*6: SEER and SCOP classification is at 230V(400V) only in accordance with EN-14825. For heating, SCOP indicates the value of only Average heating season, Other fiche data indicates in an attached sheet.

Simultaneous (Triple) -Type

1-1. Unit Speci□cations

PE1

1. 4-Way Cassette Type S-45PU1E5A×3 / U-125PE1E5A

INDOOR		MODEL	S-45PU1E5A×3							
PANEL		MODEL	CZ-KPU21×3			-				
OUTDOOR		MODEL				U-125PE1E5A				
Branch pipe		MODEL	CZ-P3HPC2							
PERFORMANCE TEST CONDITION			ISO5151 / EN14511 / EN12102							
POWER SUPPLY		ø, Hz	1ø 50Hz			1ø 50Hz				
		V	220	230	240	220	230	240	Min	Max
COOLING	CAPACITY	kW	12.5	12.5	12.5				3.3	14.0
		BTU/h	42700	42700	42700				11300	47800
	CURRENT	A	0.19×3	0.19×3	0.19×3	15.9	15.4	14.9	-	-
	INPUT POWER	W	20×3	20×3	20×3	3.410k	3.410k	3.410k	-	-
		TOTAL W		-		3.470k	3.470k	3.470k	840	4.600k
	ANNUAL CONSUMPTION	TOTAL kWh ※4		-		-	1735	-	-	-
	EER/EER CLASS	TOTAL(W/W)※5("A"~"G")	-	-	-	3.60	3.60 / A	3.60	3.93	3.04
	Erp ※6 Pdsign	kW	-	-	-	-	-	-		
	Erp ※6 SEER	(W/W)	-	-	-	-	-	-		
	Erp ※6 Annual consumption	kWh	-	-	-	-	-	-		
	Erp ※6 Class		-	-	-	-	-	-		
	POWER FACTOR	%	-	-	-	97	96	95	-	-
	NOISE INDOOR (H/M/L)	dB-A		31/28/27						
		Power Level dB		48/45/44						
	NOISE OUTDOOR (H/L)	dB-A					53/-			
		Power Level dB					70/-			
HEATING	CAPACITY	kW	14.0	14.0	14.0				4.1	16.0
		BTU/h	47800	47800	47800				14000	54600
	CURRENT	A	0.17×3	0.17×3	0.17×3	16.1	15.5	15.1	-	-
	INPUT POWER	W	20×3	20×3	20×3	3.440k	3.440k	3.440k	-	-
		TOTAL W		-		3.500k	3.500k	3.500k	900	5.200k
	COP/COP CLASS	TOTAL(W/W)※5("A"~"G")	-	-	-	4.00	4.00 / A	4.00	4.56	3.08
	Erp ※6 Pdsign	kW	-	-	-	-	-	-	-	-
	Erp ※6 Tbivalen	°C	-	-	-	-	-	-		
	Erp ※6 SCOP	(W/W)	-	-	-	-	-	-		
	Erp ※6 Annual consumption	kWh	-	-	-	-	-	-		
	Erp ※6 Class		-	-	-	-	-	-		
	POWER FACTOR	%	-	-	-	97	96	95	-	-
	NOISE INDOOR (H/M/L)	dB-A		31/28/27			-		/	/
		Power Level dB		48/45/44			-			
	NOISE OUTDOOR (H/L)	dB-A		-			53/-		/	/
		Power Level dB		-			70/-			
EXTRA LOW TEMP	Total CAPACITY(kW)/INPUT POWER(W)/COP					-				
MAX CURRENT(A)/MAX INPUT POWER(W)			0.19×3/20×3	0.19×3/20×3	0.18×3/20×3	28.0/6.000k	28.0/6.200k	28.0/6.400k	/	
STARTING CURRENT(A)/COMP OUTPUT(W)			-	-	-	16.2/3.0k	15.7/3.0k	15.2/3.0k	/	
NETWORK IMPEDANCE (ΩMAX.)				-			-			
FM OUTPUT (W)				60×3			90x2		/	
MOISTURE REMOVAL VOLUME		L/h(Pt/h)	7.9	(2.63×3)	(16.6)		-			
External static pressure		Pa		-						
I/D AIR FLOW	COOL	m^3/min (ft^3/min)		[15/13/12 (530/459/424)]×3						
	HEAT	m^3/min (ft^3/min)		[15/13/12 (530/459/424)]×3						
O/D AIR FLOW	COOL	m^3/min (ft^3/min)				130		(4591)		
	HEAT	m^3/min (ft^3/min)				110		(3885)		
REFRIGERANT TYPE, AMOUNT g(oz)						R410A	3.40k	(119.9)	/	
PROD	HEIGHT : H mm(inch)			256 (10-3/32)			1416 (55-3/4)		/	
	WIDTH : W mm(inch)			840 (33-3/32)			940 (37-1/32)		/	
	DEPTH : D mm(inch)			840 (33-3/32)			340 (13-13/32)		/	
PACK	HEIGHT : H mm			298			1556		/	
	WIDTH : W mm			929			1055		/	
	DEPTH : D mm			929			485		/	
MASS	(NET) kg(lb)			23 (51)			98 (216)		/	
	(GROSS) kg(lb)			29 (64)			108 (238)		/	
LAYERS LIMIT (actually)				11 (12)			1 (2)			
Operation Condition		Cool (DBT)		18°C ~ 32°C			-15°C ~ 46°C			
		Heat (DBT)		16°C ~ 30°C			-20°C ~ 24°C			
PIPING	PIPE DIAMETER mm (inch)		(Liquid)ø6.35(1/4) (Gas)ø12.7(1/2)			(Liquid)ø9.52(3/8) (Gas)ø15.88(5/8)				
	CONNECT METHOD, STD LENGTH m (ft)		flared type, 5.0(16.4)			flared type, 5.0(16.4)				
	PIPE LENGTH RANGE m (ft)		5 ~ 75 (16.4 ~ 246.1)						~	~
	I/D&O/D HEIGHT DIFFERENCE m (ft)		15 (OD located lower) / 30 (OD located higher) (49.2/98.4)							
	ADD GAS AMOUNT g/m (oz/ft)		50 (0.538)							
	PIPE LENGTH FOR ADDITIONAL GAS m (ft)		20 (65.6)							

*1: In case it is necessary to indicate the air □ow volume in (l/s), the value in (m^3/min.) shall be multiplied by 16.7 and rounded down the decimal point.
*2: If the EUROVENT Certi□ed models can be operated under the □extra-low□temperature condition, -7□C dry bulb and -8□C wet-bulb temperatures with rated voltage 230 V shall be used.
*3: Network Impedance shall be applicable for EUROPE and CHINA models.
*4: The annual consumption is calculated by multiplying the input power at 230 V (400 V) by an average of 500 hours per year in cooling mode.
*5: EER and COP classification is at 230 V (400 V) only in accordance with EU directive 2002/31/EC.
*6: SEER and SCOP classification is at 230V(400V) only in accordance with EN-14825. For heating, SCOP indicates the value of only Average heating season, Other fiche data indicates in an attached sheet.

Single-Type

1-1. Unit Speci□cations

PE1

1. 4-Way Cassette Type S-50PU1E5A / U-50PE1E5

INDOOR		MODEL	S-50PU1E5A							
PANEL		MODEL	CZ-KPU21			-				
OUTDOOR		MODEL				U-50PE1E5				
Branch pipe		MODEL	-							
PERFORMANCE TEST CONDITION			ISO5151 / EN14511 / EN14825 / EN12102							
POWER SUPPLY		□, Hz	1□ 50Hz			1□ 50Hz				
		V	220	230	240	220	230	240	Min	Max
COOLING	CAPACITY	kW	5.0	5.0	5.0				1.5	5.6
		BTU/h	17100	17100	17100				5100	19100
	CURRENT	A	0.22	0.22	0.21	6.50	6.20	5.95	-	-
	INPUT POWER	W	25	25	25	1.325k	1.325k	1.325k	-	-
		TOTAL W	-			1.350k	1.350k	1.350k	260	2.000k
	ANNUAL CONSUMPTION	TOTAL kWh ※4	-			675	675	675	-	-
	EER/EER CLASS	TOTAL(W/W)※5/("A"□"G")	-	-	-	3.70	3.70 / A	3.70	5.77	2.80
	Erp ※6 Pdsign	kW	-	-	-	-	5.0	-		
	Erp ※6 SEER	(W/W)	-	-	-	-	6.5	-		
	Erp ※6 Annual consumption	kWh	-	-	-	-	269	-		
	Erp ※6 Class		-	-	-	-	A++	-		
	POWER FACTOR	□	-	-	-	93	93	93	-	-
	NOISE INDOOR	dB-A (H/M/L)	32/29/27							
		Power Level dB	49/46/44							
	NOISE OUTDOOR	dB-A (H/L)				46/-				
		Power Level dB				65/-				
HEATING	CAPACITY	kW	5.6	5.6	5.6				1.5	6.5
		BTU/h	19100	19100	19100				5100	22200
	CURRENT	A	0.20	0.20	0.19	6.90	6.60	6.30	-	-
	INPUT POWER	W	25	25	25	1.405k	1.405k	1.405k	-	-
		TOTAL W	-			1.430k	1.430k	1.430k	220	2.300k
	COP/COP CLASS	TOTAL(W/W)※5/("A"□"G")	-	-	-	3.92	3.92 / A	3.92	6.82	2.83
	Erp ※6 Pdsign	kW	-	-	-	-	4.0	-		
	Erp ※6 Tbivalen	°C	-	-	-	-	-10	-		
	Erp ※6 SCOP	(W/W)	-	-	-	-	3.8	-		
	Erp ※6 Annual consumption	kWh	-	-	-	-	1474	-		
	Erp ※6 Class		-	-	-	-	A	-		
	POWER FACTOR	□	-	-	-	93	93	93	-	-
	NOISE INDOOR	dB-A (H/M/L)	32/29/27			-			/	/
		Power Level dB	49/46/44			-				
	NOISE OUTDOOR	dB-A (H/L)	-			50/-			/	/
		Power Level dB	-			69/-				
EXTRA LOW TEMP	Total CAPACITY(kW)/INPUT POWER(W)/COP		-							
MAX CURRENT(A)/MAX INPUT POWER(W)			0.22/25	0.22/25	0.21/25	12/2.46k	12/2.57k	12/2.68k	/	
STARTING CURRENT(A)/COMP OUTPUT(W)			-	-	-	6.90/1.4k	6.60/1.4k	6.30/1.4k	/	
NETWORK IMPEDANCE (ΩMAX.)			-			-				
FM OUTPUT (W)			60			90			/	
MOISTURE REMOVAL VOLUME		L/h(Pt/h)	2.8		(5.9)	-				
External static pressure		Pa	-							
I/D AIR FLOW	COOL	m^3/min (ft^3/min)	16/13.5/12 (565/477/424)							
	HEAT	m^3/min (ft^3/min)	16/13.5/12 (565/477/424)							
O/D AIR FLOW	COOL	m^3/min (ft^3/min)				30		(1067)		
	HEAT	m^3/min (ft^3/min)				35		(1225)		
REFRIGERANT TYPE, AMOUNT g(oz)						R410A	1.65k	(58.2)	/	
PROD	HEIGHT : H mm(inch)		256 (10-3/32)			569 (22-13/32)			/	
	WIDTH : W mm(inch)		840 (33-3/32)			790 (31-7/64)			/	
	DEPTH : D mm(inch)		840 (33-3/32)			285 (11-7/32)			/	
PACK	HEIGHT : H mm		298			645			/	
	WIDTH : W mm		929			921			/	
	DEPTH : D mm		929			386			/	
MASS	(NET) kg(lb)		23 (51)			42 (93)			/	
	(GROSS) kg(lb)		29 (64)			46 (101)			/	
LAYERS LIMIT (actually)			11 (12)			4 (5)				
Operation Condition		Cool (DBT)	18°C □32°C			-15°C □46°C				
		Heat (DBT)	16°C □30°C			-20°C □24°C				
PIPING	PIPE DIAMETER mm (inch)		(Liquid)□9.52(3/8) (Gas)□15.88(5/8)			(Liquid)□6.35(1/4) (Gas)□12.7(1/2)				
	CONNECT METHOD, STD LENGTH m (ft)		”ared type, 5.0(16.4)			”ared type, 5.0(16.4)				
	PIPE LENGTH RANGE m (ft)		5 □40 (16.4 □131.2)						□	□
	I/D&O/D HEIGHT DIFFERENCE m (ft)		15 (OD located lower) / 30 (OD located higher) (49.2/98.4)							
	ADD GAS AMOUNT g/m (oz/ft)		20 (0.215)							
	PIPE LENGTH FOR ADDITIONAL GAS m (ft)		30 (98.4)							

*1: In case it is necessary to indicate the air ”ow volume in (l/s), the value in (m^3/min.) shall be multiplied by 16.7 and rounded down the decimal point.
*2: If the EUROVENT Certi“ed models can be operated under the •extra-low□temperature condition, -7°C dry bulb and -8°C wet-bulb temperatures with rated voltage 230 V shall be used.
*3: Network Impedance shall be applicable for EUROPE and CHINA models.
*4: The annual consumption is calculated by multiplying the input power at 230 V (400 V) by an average of 500 hours per year in cooling mode.
*5: EER and COP classification is at 230 V (400 V) only in accordance with EU directive 2002/31/EC.
*6: SEER and SCOP classification is at 230V(400V) only in accordance with EN-14825. For heating, SCOP indicates the value of only Average heating season, Other fiche data indicates in an attached sheet.

Simultaneous (Twin) -Type

1-1. Unit Speci□cations

PE1

1. 4-Way Cassette Type S-50PU1E5A×2 / U-100PE1E5A

INDOOR		MODEL	S-50PU1E5A×2							
PANEL		MODEL	CZ-KPU21×2			-				
OUTDOOR		MODEL				U-100PE1E5A				
Branch pipe		MODEL	CZ-P155BK1							
PERFORMANCE TEST CONDITION			ISO5151 / EN14511 / EN14825 / EN12102							
POWER SUPPLY		ø, Hz	1ø 50Hz			1ø 50Hz				
		V	220	230	240	220	230	240	Min	Max
COOLING	CAPACITY	kW	10.0	10.0	10.0				3.3	12.5
		BTU/h	34100	34100	34100				11300	42700
	CURRENT	A	0.22×2	0.22×2	0.21×2	10.9	10.5	10.1	-	-
	INPUT POWER	W	25×2	25×2	25×2	2.330k	2.330k	2.330k	-	-
		TOTAL W		-		2.380k	2.380k	2.380k	840	3.700k
	ANNUAL CONSUMPTION	TOTAL kWh ※4		-		-	1190	-	-	-
	EER/EER CLASS	TOTAL(W/W)※5("A"~"G")	-	-	-	4.20	4.20 / A	4.20	3.93	3.38
	Erp ※6 Pdsign	kW	-	-	-	-	10.0	-		
	Erp ※6 SEER	(W/W)	-	-	-	-	6.6	-		
	Erp ※6 Annual consumption	kWh	-	-	-	-	530	-		
	Erp ※6 Class		-	-	-	-	A++	-		
	POWER FACTOR	%	-	-	-	97	96	96	-	-
	NOISE INDOOR (H/M/L)	dB-A		32/29/27						
		Power Level dB		49/46/44						
	NOISE OUTDOOR (H/L)	dB-A					52/-			
		Power Level dB					69/-			
HEATING	CAPACITY	kW	11.2	11.2	11.2				4.1	14.0
		BTU/h	38200	38200	38200				14000	47800
	CURRENT	A	0.20×2	0.20×2	0.19×2	11.9	11.5	11.1	-	-
	INPUT POWER	W	25×2	25×2	25×2	2.550k	2.550k	2.550k	-	-
		TOTAL W		-		2.600k	2.600k	2.600k	900	4.400k
	COP/COP CLASS	TOTAL(W/W)※5("A"~"G")	-	-	-	4.31	4.31 / A	4.31	4.56	3.18
	Erp ※6 Pdsign	kW	-	-	-	-	10.0	-	-	-
	Erp ※6 Tbivalen	°C	-	-	-	-	-10	-		
	Erp ※6 SCOP	(W/W)	-	-	-	-	4.2	-		
	Erp ※6 Annual consumption	kWh	-	-	-	-	3333	-		
	Erp ※6 Class		-	-	-	-	A+	-		
	POWER FACTOR	%	-	-	-	97	96	96	-	-
	NOISE INDOOR (H/M/L)	dB-A		32/29/27			-		/	/
		Power Level dB		49/46/44			-			
	NOISE OUTDOOR (H/L)	dB-A		-			52/-		/	/
		Power Level dB		-			69/-			
EXTRA LOW TEMP	Total CAPACITY(kW)/INPUT POWER(W)/COP					-				
MAX CURRENT(A)/MAX INPUT POWER(W)			0.22×2/25×2	0.22×2/25×2	0.21×2/25×2	25.0/5.350k	25.0/5.550k	25.0/5.750k	/	
STARTING CURRENT(A)/COMP OUTPUT(W)			-	-	-	11.9/3.0k	11.5/3.0k	11.1/3.0k	/	
NETWORK IMPEDANCE (ΩMAX.)				-			-			
FM OUTPUT (W)				60×2			90x2		/	
MOISTURE REMOVAL VOLUME		L/h(Pt/h)	6.0	(3.0×2)	(12.6)		-			
External static pressure		Pa		-						
I/D AIR FLOW	COOL	m^3/min (ft^3/min)		[16/13.5/12 (565/477/424)]×2						
	HEAT	m^3/min (ft^3/min)		[16/13.5/12 (565/477/424)]×2						
O/D AIR FLOW	COOL	m^3/min (ft^3/min)				110		(3885)		
	HEAT	m^3/min (ft^3/min)				95		(3355)		
REFRIGERANT TYPE, AMOUNT g(oz)						R410A	3.40k	(119.9)	/	
PROD IM	HEIGHT : H mm(inch)			256 (10-3/32)			1416 (55-3/4)		/	
	WIDTH : W mm(inch)			840 (33-3/32)			940 (37-1/32)		/	
	DEPTH : D mm(inch)			840 (33-3/32)			340 (13-13/32)		/	
PACK IM	HEIGHT : H mm			298			1556		/	
	WIDTH : W mm			929			1055		/	
	DEPTH : D mm			929			485		/	
MASS	(NET) kg(lb)			23 (51)			98 (216)		/	
	(GROSS) kg(lb)			29 (64)			108 (238)		/	
LAYERS LIMIT (actually)				11 (12)			1 (2)			
Operation Condition		Cool (DBT)		18°C ~ 32°C			-15°C ~ 46°C			
		Heat (DBT)		16°C ~ 30°C			-20°C ~ 24°C			
PIPING	PIPE DIAMETER mm (inch)		(Liquid)ø6.35(1/4) (Gas)ø12.7(1/2)			(Liquid)ø9.52(3/8) (Gas)ø15.88(5/8)				
	CONNECT METHOD, STD LENGTH m (ft)		flared type, 5.0(16.4)			flared type, 5.0(16.4)				
	PIPE LENGTH RANGE m (ft)		5 ~ 75 (16.4 ~ 246.1)						~	~
	I/D&O/D HEIGHT DIFFERENCE m (ft)		15 (OD located lower) / 30 (OD located higher) (49.2/98.4)							
	ADD GAS AMOUNT g/m (oz/ft)		50 (0.538)							
	PIPE LENGTH FOR ADDITIONAL GAS m (ft)		30 (98.4)							

*1: In case it is necessary to indicate the air □ow volume in (l/s), the value in (m^3/min.) shall be multiplied by 16.7 and rounded down the decimal point.
*2: If the EUROVENT Certi□ed models can be operated under the □extra-low□temperature condition, -7□C dry bulb and -8□C wet-bulb temperatures with rated voltage 230 V shall be used.
*3: Network Impedance shall be applicable for EUROPE and CHINA models.
*4: The annual consumption is calculated by multiplying the input power at 230 V (400 V) by an average of 500 hours per year in cooling mode.
*5: EER and COP classification is at 230 V (400 V) only in accordance with EU directive 2002/31/EC.
*6: SEER and SCOP classification is at 230V(400V) only in accordance with EN-14825. For heating, SCOP indicates the value of only Average heating season, Other fiche data indicates in an attached sheet.

Simultaneous (Triple) -Type

1-1. Unit Speci□cations

PE1

1. 4-Way Cassette Type S-50PU1E5A×3 / U-140PE1E5A

INDOOR		MODEL	S-50PU1E5A×3							
PANEL		MODEL	CZ-KPU21×3			-				
OUTDOOR		MODEL				U-140PE1E5A				
Branch pipe		MODEL	CZ-P3HPC2							
PERFORMANCE TEST CONDITION			ISO5151 / EN14511 / EN12102							
POWER SUPPLY		ø, Hz	1ø 50Hz			1ø 50Hz				
		V	220	230	240	220	230	240	Min	Max
COOLING	CAPACITY	kW	14.0	14.0	14.0				3.3	15.5
		BTU/h	47800	47800	47800				11300	52900
	CURRENT	A	0.22×3	0.22×3	0.21×3	19.8	19.2	18.6	-	-
	INPUT POWER	W	25×3	25×3	25×3	4.235k	4.235k	4.235k	-	-
		TOTAL W		-		4.310k	4.310k	4.310k	840	6.000k
	ANNUAL CONSUMPTION	TOTAL kWh ※4		-		-	2155	-	-	-
	EER/EER CLASS	TOTAL(W/W)※5("A"~"G")	-	-	-	3.25	3.25 / A	3.25	3.93	2.58
	Erp ※6 Pdsign	kW	-	-	-	-	-	-		
	Erp ※6 SEER	(W/W)	-	-	-	-	-	-		
	Erp ※6 Annual consumption	kWh	-	-	-	-	-	-		
	Erp ※6 Class		-	-	-	-	-	-		
	POWER FACTOR	%	-	-	-	97	96	95	-	-
	NOISE INDOOR (H/M/L)	dB-A		32/29/27						
		Power Level dB		49/46/44						
	NOISE OUTDOOR (H/L)	dB-A					54/-			
		Power Level dB					71/-			
HEATING	CAPACITY	kW	16.0	16.0	16.0				4.1	18.0
		BTU/h	54600	54600	54600				14000	61400
	CURRENT	A	0.20×3	0.20×3	0.19×3	19.9	19.3	18.7	-	-
	INPUT POWER	W	25×3	25×3	25×3	4.255k	4.255k	4.255k	-	-
		TOTAL W		-		4.330k	4.330k	4.330k	900	5.900k
	COP/COP CLASS	TOTAL(W/W)※5("A"~"G")	-	-	-	3.70	3.70 / A	3.70	4.56	3.05
	Erp ※6 Pdsign	kW	-	-	-	-	-	-	-	-
	Erp ※6 Tbivalen	°C	-	-	-	-	-	-		
	Erp ※6 SCOP	(W/W)	-	-	-	-	-	-		
	Erp ※6 Annual consumption	kWh	-	-	-	-	-	-		
	Erp ※6 Class		-	-	-	-	-	-		
	POWER FACTOR	%	-	-	-	97	96	95	-	-
	NOISE INDOOR (H/M/L)	dB-A		32/29/27			-		/	/
		Power Level dB		49/46/44			-			
	NOISE OUTDOOR (H/L)	dB-A		-			55/-		/	/
		Power Level dB		-			71/-			
EXTRA LOW TEMP	Total CAPACITY(kW)/INPUT POWER(W)/COP					-				
MAX CURRENT(A)/MAX INPUT POWER(W)			0.22×3/25×3	0.22×3/25×3	0.21×3/25×3	30.0/6.450k	30.0/6.650k	30.0/6.850k	/	
STARTING CURRENT(A)/COMP OUTPUT(W)			-	-	-	19.9/3.0k	19.3/3.0k	18.7/3.0k	/	
NETWORK IMPEDANCE (ΩMAX.)				-			-			
FM OUTPUT (W)				60×3			90x2		/	
MOISTURE REMOVAL VOLUME		L/h(Pt/h)	9.0	(3.0×3)	(18.9)		-			
External static pressure		Pa		-						
I/D AIR FLOW	COOL	m^3/min (ft^3/min)		[16/13.5/12 (565/477/424)]×3						
	HEAT	m^3/min (ft^3/min)		[16/13.5/12 (565/477/424)]×3						
O/D AIR FLOW	COOL	m^3/min (ft^3/min)				135		(4767)		
	HEAT	m^3/min (ft^3/min)				120		(4238)		
REFRIGERANT TYPE, AMOUNT g(oz)						R410A	3.40k	(119.9)	/	
PROD IM	HEIGHT : H mm(inch)			256 (10-3/32)			1416 (55-3/4)		/	
	WIDTH : W mm(inch)			840 (33-3/32)			940 (37-1/32)		/	
	DEPTH : D mm(inch)			840 (33-3/32)			340 (13-13/32)		/	
PACK IM	HEIGHT : H mm			298			1556		/	
	WIDTH : W mm			929			1055		/	
	DEPTH : D mm			929			485		/	
MASS	(NET) kg(lb)			23 (51)			98 (216)		/	
	(GROSS) kg(lb)			29 (64)			108 (238)		/	
LAYERS LIMIT (actually)				11 (12)			1 (2)			
Operation Condition		Cool (DBT)		18°C ~ 32°C			-15°C ~ 46°C			
		Heat (DBT)		16°C ~ 30°C			-20°C ~ 24°C			
PIPING	PIPE DIAMETER mm (inch)		(Liquid)ø6.35(1/4) (Gas)ø12.7(1/2)			(Liquid)ø9.52(3/8) (Gas)ø15.88(5/8)				
	CONNECT METHOD, STD LENGTH m (ft)		flared type, 5.0(16.4)			flared type, 5.0(16.4)				
	PIPE LENGTH RANGE m (ft)		5 ~ 75 (16.4 ~ 246.1)						~	~
	I/D&O/D HEIGHT DIFFERENCE m (ft)		15 (OD located lower) / 30 (OD located higher) (49.2/98.4)							
	ADD GAS AMOUNT g/m (oz/ft)		50 (0.538)							
	PIPE LENGTH FOR ADDITIONAL GAS m (ft)		20 (65.6)							

*1: In case it is necessary to indicate the air □ow volume in (l/s), the value in (m^3/min.) shall be multiplied by 16.7 and rounded down the decimal point.
*2: If the EUROVENT Certi□ed models can be operated under the □extra-low□temperature condition, -7□C dry bulb and -8□C wet-bulb temperatures with rated voltage 230 V shall be used.
*3: Network Impedance shall be applicable for EUROPE and CHINA models.
*4: The annual consumption is calculated by multiplying the input power at 230 V (400 V) by an average of 500 hours per year in cooling mode.
*5: EER and COP classification is at 230 V (400 V) only in accordance with EU directive 2002/31/EC.
*6: SEER and SCOP classification is at 230V(400V) only in accordance with EN-14825. For heating, SCOP indicates the value of only Average heating season, Other fiche data indicates in an attached sheet.

Single-Type

1-1. Unit Specifications

PE1

1. 4-Way Cassette Type S-60PU1E5A / U-60PE1E5A

INDOOR		MODEL	S-60PU1E5A							
PANEL		MODEL	CZ-KPU21			-				
OUTDOOR		MODEL				U-60PE1E5A				
Branch pipe		MODEL	-							
PERFORMANCE TEST CONDITION			ISO5151 / EN14511 / EN14825 / EN12102							
POWER SUPPLY		ø, Hz	1ø 50Hz			1ø 50Hz				
		V	220	230	240	220	230	240	Min	Max
COOLING	CAPACITY	kW	6.0	6.0	6.0				2.5	7.1
		BTU/h	20500	20500	20500				8500	24200
	CURRENT	A	0.32	0.31	0.30	7.15	6.90	6.70	-	-
	INPUT POWER	W	35	35	35	1.445k	1.445k	1.445k	-	-
		TOTAL W		-		1.480k	1.480k	1.480k	450	2.000k
	ANNUAL CONSUMPTION	TOTAL kWh ※4		-		-	740	-	-	-
	EER/EER CLASS	TOTAL(W/W)※5("A"~"G")	-	-	-	4.05	4.05 / A	4.05	5.56	3.55
	Erp ※6 Pdsign	kW	-	-	-	-	6.0	-		
	Erp ※6 SEER	(W/W)	-	-	-	-	7.4	-		
	Erp ※6 Annual consumption	kWh	-	-	-	-	284	-		
	Erp ※6 Class		-	-	-	-	A++	-		
	POWER FACTOR	%	-	-	-	92	91	90	-	-
	NOISE INDOOR (H/M/L)	dB-A		36/31/28						
		Power Level dB		53/48/45						
	NOISE OUTDOOR (H/L)	dB-A					48/-			
		Power Level dB					65/-			
HEATING	CAPACITY	kW	7.0	7.0	7.0				2.0	8.0
		BTU/h	23900	23900	23900				6800	27300
	CURRENT	A	0.30	0.30	0.29	8.50	8.20	7.95	-	-
	INPUT POWER	W	35	35	35	1.775k	1.775k	1.775k	-	-
		TOTAL W		-		1.810k	1.810k	1.810k	400	2.480k
	COP/COP CLASS	TOTAL(W/W)※5("A"~"G")	-	-	-	3.87	3.87 / A	3.87	5.00	3.23
	Erp ※6 Pdsign	kW	-	-	-	-	6.0	-		
	Erp ※6 Tbivalen	°C	-	-	-	-	-10	-		
	Erp ※6 SCOP	(W/W)	-	-	-	-	4.1	-		
	Erp ※6 Annual consumption	kWh	-	-	-	-	2047	-		
	Erp ※6 Class		-	-	-	-	A+	-		
	POWER FACTOR	%	-	-	-	95	94	93	-	-
	NOISE INDOOR (H/M/L)	dB-A		36/31/28			-		/	/
		Power Level dB		53/48/45			-			
	NOISE OUTDOOR (H/L)	dB-A		-			50/-		/	/
		Power Level dB		-			67/-			
EXTRA LOW TEMP	Total CAPACITY(kW)/INPUT POWER(W)/COP					-				
MAX CURRENT(A)/MAX INPUT POWER(W)			0.32/35	0.31/35	0.30/35	18.0/3.800k	18.0/3.930k	18.0/4.060k	/	
STARTING CURRENT(A)/COMP OUTPUT(W)			-	-	-	8.50/1.7k	8.20/1.7k	7.95/1.7k	/	
NETWORK IMPEDANCE (ΩMAX.)				-			-			
FM OUTPUT (W)				60			90		/	
MOISTURE REMOVAL VOLUME		L/h(Pt/h)		3.4 (7.1)			-			
External static pressure		Pa		-						
I/D AIR FLOW	COOL	m^3/min (ft^3/min)		21/17/14 (742/600/494)						
	HEAT	m^3/min (ft^3/min)		21/17/14 (742/600/494)						
O/D AIR FLOW	COOL	m^3/min (ft^3/min)				60		(2119)		
	HEAT	m^3/min (ft^3/min)				60		(2119)		
REFRIGERANT TYPE, AMOUNT g(oz)						R410A	2.00k	(70.5)	/	
PROD IM	HEIGHT : H mm(inch)			256 (10-3/32)			996 (39-7/32)		/	
	WIDTH : W mm(inch)			840 (33-3/32)			940 (37-1/32)		/	
	DEPTH : D mm(inch)			840 (33-3/32)			340 (13-13/32)		/	
PACK IM	HEIGHT : H mm			298			1136		/	
	WIDTH : W mm			929			1055		/	
	DEPTH : D mm			929			485		/	
MASS	(NET) kg(lb)			24 (53)			68 (150)		/	
	(GROSS) kg(lb)			30 (67)			76 (168)		/	
LAYERS LIMIT (actually)				11 (12)			2 (3)			
Operation Condition		Cool (DBT)		18°C ~ 32°C			-15°C ~ 46°C			
		Heat (DBT)		16°C ~ 30°C			-20°C ~ 24°C			
PIPING	PIPE DIAMETER mm (inch)		(Liquid)ø9.52(3/8) (Gas)ø15.88(5/8)			(Liquid)ø9.52(3/8) (Gas)ø15.88(5/8)				
	CONNECT METHOD, STD LENGTH m (ft)		flared type, 5.0(16.4)			flared type, 5.0(16.4)				
	PIPE LENGTH RANGE m (ft)		5 ~ 50 (16.4 ~ 164.0)						~	~
	I/D&O/D HEIGHT DIFFERENCE m (ft)		15 (OD located lower) / 30 (OD located higher) (49.2/98.4)							
	ADD GAS AMOUNT g/m (oz/ft)		50 (0.538)							
	PIPE LENGTH FOR ADDITIONAL GAS m (ft)		30 (98.4)							

*1: In case it is necessary to indicate the air flow volume in (l/s), the value in (m^3/min.) shall be multiplied by 16.7 and rounded down the decimal point.
*2: If the EUROVENT Certified models can be operated under the extra-low temperature condition, -7°C dry bulb and -8°C wet-bulb temperatures with rated voltage 230 V shall be used.
*3: Network Impedance shall be applicable for EUROPE and CHINA models.
*4: The annual consumption is calculated by multiplying the input power at 230 V (400 V) by an average of 500 hours per year in cooling mode.
*5: EER and COP classification is at 230 V (400 V) only in accordance with EU directive 2002/31/EC.
*6: SEER and SCOP classification is at 230V(400V) only in accordance with EN-14825. For heating, SCOP indicates the value of only Average heating season, Other fiche data indicates in an attached sheet.

Simultaneous (Twin) -Type

1-1. Unit Speci□cations

PE1

1. 4-Way Cassette Type S-60PU1E5A×2 / U-125PE1E5A

INDOOR		MODEL	S-60PU1E5A×2							
PANEL		MODEL	CZ-KPU21×2			-				
OUTDOOR		MODEL				U-125PE1E5A				
Branch pipe		MODEL	CZ-P155BK1							
PERFORMANCE TEST CONDITION			ISO5151 / EN14511 / EN12102							
POWER SUPPLY		ø, Hz	1ø 50Hz			1ø 50Hz				
		V	220	230	240	220	230	240	Min	Max
COOLING	CAPACITY	kW	12.5	12.5	12.5				3.3	14.0
		BTU/h	42700	42700	42700				11300	47800
	CURRENT	A	0.32×2	0.31×2	0.30×2	15.9	15.4	14.9	-	-
	INPUT POWER	W	35×2	35×2	35×2	3.400k	3.400k	3.400k	-	-
		TOTAL W		-		3.470k	3.470k	3.470k	840	4.600k
	ANNUAL CONSUMPTION	TOTAL kWh ※4		-		-	1735	-	-	-
	EER/EER CLASS	TOTAL(W/W) ※5/("A"~"G")	-	-	-	3.60	3.60 / A	3.60	3.93	3.04
	Erp ※6 Pdsign	kW	-	-	-	-	-	-		
	Erp ※6 SEER	(W/W)	-	-	-	-	-	-		
	Erp ※6 Annual consumption	kWh	-	-	-	-	-	-		
	Erp ※6 Class		-	-	-	-	-	-		
	POWER FACTOR	%	-	-	-	97	96	95	-	-
	NOISE INDOOR (H/M/L)	dB-A		36/31/28						
		Power Level dB		53/48/45						
	NOISE OUTDOOR (H/L)	dB-A					53/-			
		Power Level dB					70/-			
HEATING	CAPACITY	kW	14.0	14.0	14.0				4.1	16.0
		BTU/h	47800	47800	47800				14000	54600
	CURRENT	A	0.30×2	0.30×2	0.29×2	16.0	15.5	15.0	-	-
	INPUT POWER	W	35×2	35×2	35×2	3.430k	3.430k	3.430k	-	-
		TOTAL W		-		3.500k	3.500k	3.500k	900	5.200k
	COP/COP CLASS	TOTAL(W/W) ※5/("A"~"G")	-	-	-	4.00	4.00 / A	4.00	4.56	3.08
	Erp ※6 Pdsign	kW	-	-	-	-	-	-	-	-
	Erp ※6 Tbivalen	°C	-	-	-	-	-	-		
	Erp ※6 SCOP	(W/W)	-	-	-	-	-	-		
	Erp ※6 Annual consumption	kWh	-	-	-	-	-	-		
	Erp ※6 Class		-	-	-	-	-	-		
	POWER FACTOR	%	-	-	-	97	96	95	-	-
	NOISE INDOOR (H/M/L)	dB-A		36/31/28			-		/	/
		Power Level dB		53/48/45			-			
	NOISE OUTDOOR (H/L)	dB-A		-			53/-		/	/
		Power Level dB		-			70/-			
EXTRA LOW TEMP	Total CAPACITY(kW)/INPUT POWER(W)/COP					-				
MAX CURRENT(A)/MAX INPUT POWER(W)			0.32×2/35×2	0.31×2/35×2	0.30×2/35×2	28.0/6.000k	28.0/6.200k	28.0/6.400k	/	
STARTING CURRENT(A)/COMP OUTPUT(W)			-	-	-	16.0/3.0k	15.5/3.0k	15.0/3.0k	/	
NETWORK IMPEDANCE (ΩMAX.)				-			-			
FM OUTPUT (W)				60×2			90x2		/	
MOISTURE REMOVAL VOLUME		L/h(Pt/h)	7.9	(3.95×2)	(16.6)		-			
External static pressure		Pa		-						
I/D AIR FLOW	COOL	m^3/min (ft^3/min)		[21/17/14 (742/600/494)]×2						
	HEAT	m^3/min (ft^3/min)		[21/17/14 (742/600/494)]×2						
O/D AIR FLOW	COOL	m^3/min (ft^3/min)				130		(4591)		
	HEAT	m^3/min (ft^3/min)				110		(3885)		
REFRIGERANT TYPE, AMOUNT g(oz)						R410A	3.40k	(119.9)	/	
PROD IM	HEIGHT : H mm(inch)			256 (10-3/32)			1416 (55-3/4)		/	
	WIDTH : W mm(inch)			840 (33-3/32)			940 (37-1/32)		/	
	DEPTH : D mm(inch)			840 (33-3/32)			340 (13-13/32)		/	
PACK IM	HEIGHT : H mm			298			1556		/	
	WIDTH : W mm			929			1055		/	
	DEPTH : D mm			929			485		/	
MASS	(NET) kg(lb)			24 (53)			98 (216)		/	
	(GROSS) kg(lb)			30 (67)			108 (238)		/	
LAYERS LIMIT (actually)				11 (12)			1 (2)			
Operation Condition		Cool (DBT)		18°C ~ 32°C			-15°C ~ 46°C			
		Heat (DBT)		16°C ~ 30°C			-20°C ~ 24°C			
PIPING	PIPE DIAMETER mm (inch)		(Liquid)ø9.52(3/8) (Gas)ø15.88(5/8)			(Liquid)ø9.52(3/8) (Gas)ø15.88(5/8)				
	CONNECT METHOD, STD LENGTH m (ft)		flared type, 5.0(16.4)			flared type, 5.0(16.4)				
	PIPE LENGTH RANGE m (ft)		5 ~ 75 (16.4 ~ 246.1)						~	~
	I/D&O/D HEIGHT DIFFERENCE m (ft)		15 (OD located lower) / 30 (OD located higher) (49.2/98.4)							
	ADD GAS AMOUNT g/m (oz/ft)		50 (0.538)							
	PIPE LENGTH FOR ADDITIONAL GAS m (ft)		30 (98.4)							

*1: In case it is necessary to indicate the air □ow volume in (l/s), the value in (m^3/min.) shall be multiplied by 16.7 and rounded down the decimal point.
*2: If the EUROVENT Certi□ed models can be operated under the □extra-low□temperature condition, -7□C dry bulb and -8□C wet-bulb temperatures with rated voltage 230 V shall be used.
*3: Network Impedance shall be applicable for EUROPE and CHINA models.
*4: The annual consumption is calculated by multiplying the input power at 230 V (400 V) by an average of 500 hours per year in cooling mode.
*5: EER and COP classification is at 230 V (400 V) only in accordance with EU directive 2002/31/EC.
*6: SEER and SCOP classification is at 230V(400V) only in accordance with EN-14825. For heating, SCOP indicates the value of only Average heating season, Other fiche data indicates in an attached sheet.

Single-Type

1-1. Unit Specifications

PE1

1. 4-Way Cassette Type S-71PU1E5A / U-71PE1E5A

INDOOR		MODEL	S-71PU1E5A							
PANEL		MODEL	CZ-KPU21			-				
OUTDOOR		MODEL				U-71PE1E5A				
Branch pipe		MODEL	-							
PERFORMANCE TEST CONDITION			ISO5151 / EN14511 / EN14825 / EN12102							
POWER SUPPLY		ø, Hz	1ø 50Hz			1ø 50Hz				
		V	220	230	240	220	230	240	Min	Max
COOLING	CAPACITY	kW	7.1	7.1	7.1				2.5	8.0
		BTU/h	24200	24200	24200				8500	27300
	CURRENT	A	0.36	0.33	0.32	8.40	8.10	7.90	-	-
	INPUT POWER	W	40	40	40	1.760k	1.760k	1.760k	-	-
		TOTAL W		-		1.800k	1.800k	1.800k	450	2.650k
	ANNUAL CONSUMPTION	TOTAL kWh ※4		-		-	900	-	-	-
	EER/EER CLASS	TOTAL(W/W)※5("A"~"G")	-	-	-	3.94	3.94 / A	3.94	5.56	3.02
	Erp ※6	Pdsign kW	-	-	-	-	7.1	-		
		SEER (W/W)	-	-	-	-	7.4	-		
		Annual consumption kWh	-	-	-	-	336	-		
		Class	-	-	-	-	A++	-		
	POWER FACTOR	%	-	-	-	95	94	93	-	-
	NOISE INDOOR (H/M/L)	dB-A		37/31/28						
		Power Level dB		54/48/45						
	NOISE OUTDOOR (H/L)	dB-A					48/-			
		Power Level dB					65/-			
HEATING	CAPACITY	kW	8.0	8.0	8.0				2.0	9.0
		BTU/h	27300	27300	27300				6800	30700
	CURRENT	A	0.35	0.32	0.31	9.30	9.00	8.70	-	-
	INPUT POWER	W	40	40	40	1.960k	1.960k	1.960k	-	-
		TOTAL W		-		2.000k	2.000k	2.000k	400	2.900k
	COP/COP CLASS	TOTAL(W/W)※5("A"~"G")	-	-	-	4.00	4.00 / A	4.00	5.00	3.10
	Erp ※6	Pdsign kW	-	-	-	-	7.1	-		
		Tbivalen °C	-	-	-	-	-9	-		
		SCOP (W/W)	-	-	-	-	4.1	-		
		Annual consumption kWh	-	-	-	-	2424	-		
		Class	-	-	-	-	A+	-		
	POWER FACTOR	%	-	-	-	96	95	94	-	-
	NOISE INDOOR (H/M/L)	dB-A		37/31/28			-		/	/
		Power Level dB		54/48/45			-			
	NOISE OUTDOOR (H/L)	dB-A		-			50/-		/	/
		Power Level dB		-			67/-			
EXTRA LOW TEMP	Total CAPACITY(kW)/INPUT POWER(W)/COP					-				
MAX CURRENT(A)/MAX INPUT POWER(W)			0.36/40	0.33/40	0.32/40	18.0/3.800k	18.0/3.930k	18.0/4.060k	/	
STARTING CURRENT(A)/COMP OUTPUT(W)			-	-	-	9.30/2.0k	9.00/2.0k	8.70/2.0k	/	
NETWORK IMPEDANCE (ΩMAX.)				-			-			
FM OUTPUT (W)				60			90		/	
MOISTURE REMOVAL VOLUME		L/h(Pt/h)	4.2		(8.8)		-			
External static pressure		Pa		-						
I/D AIR FLOW	COOL	m^3/min (ft^3/min)		22/17/14 (777/600/494)						
	HEAT	m^3/min (ft^3/min)		22/17/14 (777/600/494)						
O/D AIR FLOW	COOL	m^3/min (ft^3/min)				60		(2119)		
	HEAT	m^3/min (ft^3/min)				60		(2119)		
REFRIGERANT TYPE, AMOUNT g(oz)						R410A	2.35k	(82.9)	/	
PROD IM	HEIGHT : H mm(inch)			256 (10-3/32)			996 (39-7/32)		/	
	WIDTH : W mm(inch)			840 (33-3/32)			940 (37-1/32)		/	
	DEPTH : D mm(inch)			840 (33-3/32)			340 (13-13/32)		/	
PACK IM	HEIGHT : H mm			298			1136		/	
	WIDTH : W mm			929			1055		/	
	DEPTH : D mm			929			485		/	
MASS	(NET) kg(lb)			24 (53)			69 (152)		/	
	(GROSS) kg(lb)			30 (67)			77 (170)		/	
LAYERS LIMIT (actually)				11 (12)			2 (3)			
Operation Condition		Cool (DBT)		18°C ~ 32°C			-15°C ~ 46°C			
		Heat (DBT)		16°C ~ 30°C			-20°C ~ 24°C			
PIPING	PIPE DIAMETER mm (inch)		(Liquid)ø9.52(3/8) (Gas)ø15.88(5/8)			(Liquid)ø9.52(3/8) (Gas)ø15.88(5/8)				
	CONNECT METHOD, STD LENGTH m (ft)		flared type, 5.0(16.4)			flared type, 5.0(16.4)				
	PIPE LENGTH RANGE m (ft)		5 ~ 50 (16.4 ~ 164.0)						~	~
	I/D&O/D HEIGHT DIFFERENCE m (ft)		15 (OD located lower) / 30 (OD located higher) (49.2/98.4)							
	ADD GAS AMOUNT g/m (oz/ft)		50 (0.538)							
	PIPE LENGTH FOR ADDITIONAL GAS m (ft)		30 (98.4)							

*1: In case it is necessary to indicate the air flow volume in (l/s), the value in (m^3/min.) shall be multiplied by 16.7 and rounded down the decimal point.
*2: If the EUROVENT Certified models can be operated under the extra-low temperature condition, -7°C dry bulb and -8°C wet-bulb temperatures with rated voltage 230 V shall be used.
*3: Network Impedance shall be applicable for EUROPE and CHINA models.
*4: The annual consumption is calculated by multiplying the input power at 230 V (400 V) by an average of 500 hours per year in cooling mode.
*5: EER and COP classification is at 230 V (400 V) only in accordance with EU directive 2002/31/EC.
*6: SEER and SCOP classification is at 230V(400V) only in accordance with EN-14825. For heating, SCOP indicates the value of only Average heating season, Other fiche data indicates in an attached sheet.

Simultaneous (Twin) -Type

1-1. Unit Speci□cations

PE1

1. 4-Way Cassette Type S-71PU1E5A×2 / U-140PE1E5A

INDOOR		MODEL	S-71PU1E5A×2							
PANEL		MODEL	CZ-KPU21×2			-				
OUTDOOR		MODEL				U-140PE1E5A				
Branch pipe		MODEL	CZ-P155BK1							
PERFORMANCE TEST CONDITION			ISO5151 / EN14511 / EN12102							
POWER SUPPLY		ø, Hz	1ø 50Hz			1ø 50Hz				
		V	220	230	240	220	230	240	Min	Max
COOLING	CAPACITY	kW	14.0	14.0	14.0				3.3	15.5
		BTU/h	47800	47800	47800				11300	52900
	CURRENT	A	0.36×2	0.33×2	0.32×2	19.8	19.2	18.6	-	-
	INPUT POWER	W	40×2	40×2	40×2	4.230k	4.230k	4.230k	-	-
		TOTAL W		-		4.310k	4.310k	4.310k	840	6.000k
	ANNUAL CONSUMPTION	TOTAL kWh ※4		-		-	2155	-	-	-
	EER/EER CLASS	TOTAL(W/W) ※5("A"~"G")	-	-	-	3.25	3.25 / A	3.25	3.93	2.58
	Erp ※6 Pdsign	kW	-	-	-	-	-	-		
	Erp ※6 SEER	(W/W)	-	-	-	-	-	-		
	Erp ※6 Annual consumption	kWh	-	-	-	-	-	-		
	Erp ※6 Class		-	-	-	-	-	-		
	POWER FACTOR	%	-	-	-	97	96	95	-	-
	NOISE INDOOR (H/M/L)	dB-A		37/31/28						
		Power Level dB		54/48/45						
	NOISE OUTDOOR (H/L)	dB-A					54/-			
		Power Level dB					71/-			
HEATING	CAPACITY	kW	16.0	16.0	16.0				4.1	18.0
		BTU/h	54600	54600	54600				14000	61400
	CURRENT	A	0.35×2	0.32×2	0.31×2	19.9	19.3	18.7	-	-
	INPUT POWER	W	40×2	40×2	40×2	4.250k	4.250k	4.250k	-	-
		TOTAL W		-		4.330k	4.330k	4.330k	900	5.900k
	COP/COP CLASS	TOTAL(W/W) ※5("A"~"G")	-	-	-	3.70	3.70 / A	3.70	4.56	3.05
	Erp ※6 Pdsign	kW	-	-	-	-	-	-	-	-
	Erp ※6 Tbivalen	°C	-	-	-	-	-	-		
	Erp ※6 SCOP	(W/W)	-	-	-	-	-	-		
	Erp ※6 Annual consumption	kWh	-	-	-	-	-	-		
	Erp ※6 Class		-	-	-	-	-	-		
	POWER FACTOR	%	-	-	-	97	96	95	-	-
	NOISE INDOOR (H/M/L)	dB-A		37/31/28			-		/	/
		Power Level dB		54/48/45			-			
	NOISE OUTDOOR (H/L)	dB-A		-			55/-		/	/
		Power Level dB		-			71/-			
EXTRA LOW TEMP	Total CAPACITY(kW)/INPUT POWER(W)/COP				-					
MAX CURRENT(A)/MAX INPUT POWER(W)			0.36×2/40×2	0.33×2/40×2	0.32×2/40×2	30.0/6.450k	30.0/6.650k	30.0/6.850k	/	
STARTING CURRENT(A)/COMP OUTPUT(W)			-	-	-	19.9/3.0k	19.3/3.0k	18.7/3.0k	/	
NETWORK IMPEDANCE (ΩMAX.)				-			-			
FM OUTPUT (W)				60×2			90x2		/	
MOISTURE REMOVAL VOLUME		L/h(Pt/h)	9.0	(4.5×2)	(18.9)		-			
External static pressure		Pa		-						
I/D AIR FLOW	COOL	m³/min (ft³/min)		[22/17/14 (777/600/494)]×2						
	HEAT	m³/min (ft³/min)		[22/17/14 (777/600/494)]×2						
O/D AIR FLOW	COOL	m³/min (ft³/min)				135		(4767)		
	HEAT	m³/min (ft³/min)				120		(4238)		
REFRIGERANT TYPE, AMOUNT g(oz)						R410A	3.40k	(119.9)	/	
PROD	HEIGHT : H mm(inch)			256 (10-3/32)			1416 (55-3/4)		/	
	WIDTH : W mm(inch)			840 (33-3/32)			940 (37-1/32)		/	
	DEPTH : D mm(inch)			840 (33-3/32)			340 (13-13/32)		/	
PACK	HEIGHT : H mm			298			1556		/	
	WIDTH : W mm			929			1055		/	
	DEPTH : D mm			929			485		/	
MASS	(NET) kg(lb)			24 (53)			98 (216)		/	
	(GROSS) kg(lb)			30 (67)			108 (238)		/	
LAYERS LIMIT (actually)				11 (12)			1 (2)			
Operation Condition		Cool (DBT)		18°C ~ 32°C			-15°C ~ 46°C			
		Heat (DBT)		16°C ~ 30°C			-20°C ~ 24°C			
PIPING	PIPE DIAMETER mm (inch)		(Liquid)ø9.52(3/8) (Gas)ø15.88(5/8)			(Liquid)ø9.52(3/8) (Gas)ø15.88(5/8)				
	CONNECT METHOD, STD LENGTH m (ft)		flared type, 5.0(16.4)			flared type, 5.0(16.4)				
	PIPE LENGTH RANGE m (ft)		5 ~ 75 (16.4 ~ 246.1)						~	~
	I/D&O/D HEIGHT DIFFERENCE m (ft)		15 (OD located lower) / 30(OD located higher) (49.2/98.4)							
	ADD GAS AMOUNT g/m (oz/ft)		50 (0.538)							
	PIPE LENGTH FOR ADDITIONAL GAS m (ft)		30 (98.4)							

*1: In case it is necessary to indicate the air □ow volume in (l/s), the value in (m^3/min.) shall be multiplied by 16.7 and rounded down the decimal point.
*2: If the EUROVENT Certi□ed models can be operated under the □extra-low□temperature condition, -7□C dry bulb and -8□C wet-bulb temperatures with rated voltage 230 V shall be used.
*3: Network Impedance shall be applicable for EUROPE and CHINA models.
*4: The annual consumption is calculated by multiplying the input power at 230 V (400 V) by an average of 500 hours per year in cooling mode.
*5: EER and COP classification is at 230 V (400 V) only in accordance with EU directive 2002/31/EC.
*6: SEER and SCOP classification is at 230V(400V) only in accordance with EN-14825. For heating, SCOP indicates the value of only Average heating season, Other fiche data indicates in an attached sheet.

Single-Type

1-1. Unit Specifications

PE1

1. 4-Way Cassette Type S-100PU1E5A / U-100PE1E5A

INDOOR		MODEL	S-100PU1E5A							
PANEL		MODEL	CZ-KPU21			-				
OUTDOOR		MODEL				U-100PE1E5A				
Branch pipe		MODEL	-							
PERFORMANCE TEST CONDITION			ISO5151 / EN14511 / EN14825 / EN12102							
POWER SUPPLY		ø, Hz	1ø 50Hz			1ø 50Hz				
		V	220	230	240	220	230	240	Min	Max
COOLING	CAPACITY	kW	10.0	10.0	10.0				3.3	12.5
		BTU/h	34100	34100	34100				11300	42700
	CURRENT	A	0.73	0.71	0.71	10.7	10.3	9.90	-	-
	INPUT POWER	W	95	95	95	2.285k	2.285k	2.285k	-	-
		TOTAL W		-		2.380k	2.380k	2.380k	840	3.700k
	ANNUAL CONSUMPTION	TOTAL kWh ※4		-		-	1190	-	-	-
	EER/EER CLASS	TOTAL(W/W)※5("A"~"G")	-	-	-	4.20	4.20 / A	4.20	3.93	3.38
	Erp ※6 Pdsign	kW	-	-	-	-	10.0	-		
	Erp ※6 SEER	(W/W)	-	-	-	-	6.6	-		
	Erp ※6 Annual consumption	kWh	-	-	-	-	530	-		
	Erp ※6 Class		-	-	-	-	A++	-		
	POWER FACTOR	%	-	-	-	97	96	96	-	-
	NOISE INDOOR (H/M/L)	dB-A		44/38/32						
		Power Level dB		62/55/49						
	NOISE OUTDOOR (H/L)	dB-A					52/-			
		Power Level dB					69/-			
HEATING	CAPACITY	kW	11.2	11.2	11.2				4.1	14.0
		BTU/h	38200	38200	38200				14000	47800
	CURRENT	A	0.66	0.65	0.64	11.8	11.4	11.0	-	-
	INPUT POWER	W	85	85	85	2.515k	2.515k	2.515k	-	-
		TOTAL W		-		2.600k	2.600k	2.600k	900	4.400k
	COP/COP CLASS	TOTAL(W/W)※5("A"~"G")	-	-	-	4.31	4.31 / A	4.31	4.56	3.18
	Erp ※6 Pdsign	kW	-	-	-	-	10.0	-	-	-
	Erp ※6 Tbivalen	°C	-	-	-	-	-10	-		
	Erp ※6 SCOP	(W/W)	-	-	-	-	4.2	-		
	Erp ※6 Annual consumption	kWh	-	-	-	-	3333	-		
	Erp ※6 Class		-	-	-	-	A+	-		
	POWER FACTOR	%	-	-	-	97	96	95	-	-
	NOISE INDOOR (H/M/L)	dB-A		44/38/32			-		/	/
		Power Level dB		62/55/49			-			
	NOISE OUTDOOR (H/L)	dB-A		-			52/-		/	/
		Power Level dB		-			69/-			
EXTRA LOW TEMP	Total CAPACITY(kW)/INPUT POWER(W)/COP					-				
MAX CURRENT(A)/MAX INPUT POWER(W)			0.73/95	0.71/95	0.71/95	25.0/5.350k	25.0/5.550k	25.0/5.750k	/	
STARTING CURRENT(A)/COMP OUTPUT(W)			-	-	-	11.8/3.0k	11.4/3.0k	11.0/3.0k	/	
NETWORK IMPEDANCE (ΩMAX.)				-			-			
FM OUTPUT (W)				90			90x2		/	
MOISTURE REMOVAL VOLUME		L/h(Pt/h)	6.0		(12.6)		-			
External static pressure		Pa		-						
I/D AIR FLOW	COOL	m^3/min (ft^3/min)		33/27/21 (1165/953/742)						
	HEAT	m^3/min (ft^3/min)		33/27/21 (1165/953/742)						
O/D AIR FLOW	COOL	m^3/min (ft^3/min)				110		(3885)		
	HEAT	m^3/min (ft^3/min)				95		(3355)		
REFRIGERANT TYPE, AMOUNT g(oz)						R410A	3.40k	(119.9)	/	
PROD IM	HEIGHT : H mm(inch)			319 (12-9/16)			1416 (55-3/4)		/	
	WIDTH : W mm(inch)			840 (33-3/32)			940 (37-1/32)		/	
	DEPTH : D mm(inch)			840 (33-3/32)			340 (13-13/32)		/	
PACK IM	HEIGHT : H mm			361			1556		/	
	WIDTH : W mm			929			1055		/	
	DEPTH : D mm			929			485		/	
MASS	(NET) kg(lb)			27 (60)			98 (216)		/	
	(GROSS) kg(lb)			34 (75)			108 (238)		/	
LAYERS LIMIT (actually)				11 (12)			1 (2)			
Operation Condition		Cool (DBT)		18°C ~ 32°C			-15°C ~ 46°C			
		Heat (DBT)		16°C ~ 30°C			-20°C ~ 24°C			
PIPING	PIPE DIAMETER mm (inch)		(Liquid)ø9.52(3/8) (Gas)ø15.88(5/8)			(Liquid)ø9.52(3/8) (Gas)ø15.88(5/8)				
	CONNECT METHOD, STD LENGTH m (ft)		flared type, 5.0(16.4)			flared type, 5.0(16.4)				
	PIPE LENGTH RANGE m (ft)		5 ~ 75 (16.4 ~ 246.1)						~	~
	I/D&O/D HEIGHT DIFFERENCE m (ft)		15 (OD located lower) / 30 (OD located higher) (49.2/98.4)							
	ADD GAS AMOUNT g/m (oz/ft)		50 (0.538)							
	PIPE LENGTH FOR ADDITIONAL GAS m (ft)		30 (98.4)							

*1: In case it is necessary to indicate the air flow volume in (l/s), the value in (m^3/min.) shall be multiplied by 16.7 and rounded down the decimal point.
*2: If the EUROVENT Certified models can be operated under the "extra-low" temperature condition, -7°C dry bulb and -8°C wet-bulb temperatures with rated voltage 230 V shall be used.
*3: Network Impedance shall be applicable for EUROPE and CHINA models.
*4: The annual consumption is calculated by multiplying the input power at 230 V (400 V) by an average of 500 hours per year in cooling mode.
*5: EER and COP classification is at 230 V (400 V) only in accordance with EU directive 2002/31/EC.
*6: SEER and SCOP classification is at 230V(400V) only in accordance with EN-14825. For heating, SCOP indicates the value of only Average heating season, Other fiche data indicates in an attached sheet.

Single-Type

1-1. Unit Specifications

PE1

1. 4-Way Cassette Type S-125PU1E5A / U-125PE1E5A

INDOOR		MODEL	S-125PU1E5A							
PANEL		MODEL	CZ-KPU21			-				
OUTDOOR		MODEL				U-125PE1E5A				
Branch pipe		MODEL	-							
PERFORMANCE TEST CONDITION			ISO5151 / EN14511 / EN12102							
POWER SUPPLY		ø, Hz	1ø 50Hz			1ø 50Hz				
		V	220	230	240	220	230	240	Min	Max
COOLING	CAPACITY	kW	12.5	12.5	12.5				3.3	14.0
		BTU/h	42700	42700	42700				11300	47800
	CURRENT	A	0.77	0.76	0.73	15.8	15.3	14.8	-	-
	INPUT POWER	W	100	100	100	3.370k	3.370k	3.370k	-	-
		TOTAL W		-		3.470k	3.470k	3.470k	840	4.600k
	ANNUAL CONSUMPTION	TOTAL kWh ※4		-		-	1735	-	-	-
	EER/EER CLASS	TOTAL(W/W) ※5/("A"~"G")	-	-	-	3.60	3.60 / A	3.60	3.93	3.04
	Erp ※6 Pdsign	kW	-	-	-	-	-	-		
	Erp ※6 SEER	(W/W)	-	-	-	-	-	-		
	Erp ※6 Annual consumption	kWh	-	-	-	-	-	-		
	Erp ※6 Class		-	-	-	-	-	-		
	POWER FACTOR	%	-	-	-	97	96	95	-	-
	NOISE INDOOR (H/M/L)	dB-A		45/39/33						
		Power Level dB		63/56/50						
	NOISE OUTDOOR (H/L)	dB-A					53/-			
		Power Level dB					70/-			
HEATING	CAPACITY	kW	14.0	14.0	14.0				4.1	16.0
		BTU/h	47800	47800	47800				14000	54600
	CURRENT	A	0.75	0.73	0.73	15.9	15.4	14.9	-	-
	INPUT POWER	W	100	100	100	3.400k	3.400k	3.400k	-	-
		TOTAL W		-		3.500k	3.500k	3.500k	900	5.200k
	COP/COP CLASS	TOTAL(W/W) ※5/("A"~"G")	-	-	-	4.00	4.00 / A	4.00	4.56	3.08
	Erp ※6 Pdsign	kW	-	-	-	-	-	-		
	Erp ※6 Tbivalen	°C	-	-	-	-	-	-		
	Erp ※6 SCOP	(W/W)	-	-	-	-	-	-		
	Erp ※6 Annual consumption	kWh	-	-	-	-	-	-		
	Erp ※6 Class		-	-	-	-	-	-		
	POWER FACTOR	%	-	-	-	97	96	95	-	-
	NOISE INDOOR (H/M/L)	dB-A		45/39/33			-		/	/
		Power Level dB		63/56/50			-			
	NOISE OUTDOOR (H/L)	dB-A		-			53/-		/	/
		Power Level dB		-			70/-			
EXTRA LOW TEMP	Total CAPACITY(kW)/INPUT POWER(W)/COP					-				
MAX CURRENT(A)/MAX INPUT POWER(W)			0.77/100	0.76/100	0.73/100	28.0/6.000k	28.0/6.200k	28.0/6.400k	/	
STARTING CURRENT(A)/COMP OUTPUT(W)			-	-	-	15.9/3.0k	15.4/3.0k	14.9/3.0k	/	
NETWORK IMPEDANCE (ΩMAX.)				-			-			
FM OUTPUT (W)				90			90x2		/	
MOISTURE REMOVAL VOLUME		L/h(Pt/h)	7.9		(16.6)		-			
External static pressure		Pa		-						
I/D AIR FLOW	COOL	m^3/min (ft^3/min)		35/28/22 (1236/989/777)						
	HEAT	m^3/min (ft^3/min)		35/28/22 (1236/989/777)						
O/D AIR FLOW	COOL	m^3/min (ft^3/min)				130		(4591)		
	HEAT	m^3/min (ft^3/min)				110		(3885)		
REFRIGERANT TYPE, AMOUNT g(oz)						R410A	3.40k	(119.9)	/	
PROD	HEIGHT : H mm(inch)			319 (12-9/16)			1416 (55-3/4)		/	
	WIDTH : W mm(inch)			840 (33-3/32)			940 (37-1/32)		/	
	DEPTH : D mm(inch)			840 (33-3/32)			340 (13-13/32)		/	
PACK	HEIGHT : H mm			361			1556		/	
	WIDTH : W mm			929			1055		/	
	DEPTH : D mm			929			485		/	
MASS	(NET) kg(lb)			27 (60)			98 (216)		/	
	(GROSS) kg(lb)			34 (75)			108 (238)		/	
LAYERS LIMIT (actually)				11 (12)			1 (2)			
Operation Condition		Cool (DBT)		18°C ~ 32°C			-15°C ~ 46°C			
		Heat (DBT)		16°C ~ 30°C			-20°C ~ 24°C			
PIPING	PIPE DIAMETER mm (inch)		(Liquid)ø9.52(3/8) (Gas)ø15.88(5/8)			(Liquid)ø9.52(3/8) (Gas)ø15.88(5/8)				
	CONNECT METHOD, STD LENGTH m (ft)		flared type, 5.0(16.4)			flared type, 5.0(16.4)				
	PIPE LENGTH RANGE m (ft)		5 ~ 75 (16.4 ~ 246.1)						~	~
	I/D&O/D HEIGHT DIFFERENCE m (ft)		15(OD located lower) /30 (OD located higher) (49.2/98.4)							
	ADD GAS AMOUNT g/m (oz/ft)		50 (0.538)							
	PIPE LENGTH FOR ADDITIONAL GAS m (ft)		30 (98.4)							

*1: In case it is necessary to indicate the air flow volume in (l/s), the value in (m^3/min.) shall be multiplied by 16.7 and rounded down the decimal point.
*2: If the EUROVENT Certified models can be operated under the extra-low temperature condition, -7°C dry bulb and -8°C wet-bulb temperatures with rated voltage 230 V shall be used.
*3: Network Impedance shall be applicable for EUROPE and CHINA models.
*4: The annual consumption is calculated by multiplying the input power at 230 V (400 V) by an average of 500 hours per year in cooling mode.
*5: EER and COP classification is at 230 V (400 V) only in accordance with EU directive 2002/31/EC.
*6: SEER and SCOP classification is at 230V(400V) only in accordance with EN-14825. For heating, SCOP indicates the value of only Average heating season, Other fiche data indicates in an attached sheet.

Single-Type

1-1. Unit Specifications

PE1

1. 4-Way Cassette Type S-140PU1E5A / U-140PE1E5A

INDOOR		MODEL	S-140PU1E5A							
PANEL		MODEL	CZ-KPU21			-				
OUTDOOR		MODEL				U-140PE1E5A				
Branch pipe		MODEL	-							
PERFORMANCE TEST CONDITION			ISO5151 / EN14511 / EN12102							
POWER SUPPLY		ø, Hz	1ø 50Hz			1ø 50Hz				
		V	220	230	240	220	230	240	Min	Max
COOLING	CAPACITY	kW	14.0	14.0	14.0				3.3	15.5
		BTU/h	47800	47800	47800				11300	52900
	CURRENT	A	0.90	0.89	0.87	19.6	19.0	18.4	-	-
	INPUT POWER	W	115	115	115	4.195k	4.195k	4.195k	-	-
		TOTAL W		-		4.310k	4.310k	4.310k	840	6.000k
	ANNUAL CONSUMPTION	TOTAL kWh ※4		-		-	2155	-	-	-
	EER/EER CLASS	TOTAL(W/W) ※5("A"~"G")	-	-	-	3.25	3.25 / A	3.25	3.93	2.58
	Erp ※6 Pdsign	kW	-	-	-	-	-	-		
	Erp ※6 SEER	(W/W)	-	-	-	-	-	-		
	Erp ※6 Annual consumption	kWh	-	-	-	-	-	-		
	Erp ※6 Class		-	-	-	-	-	-		
	POWER FACTOR	%	-	-	-	97	96	95	-	-
	NOISE INDOOR (H/M/L)	dB-A		46/40/34						
		Power Level dB		64/57/51						
	NOISE OUTDOOR (H/L)	dB-A					54/-			
		Power Level dB					71/-			
HEATING	CAPACITY	kW	16.0	16.0	16.0				4.1	18.0
		BTU/h	54600	54600	54600				14000	61400
	CURRENT	A	0.83	0.80	0.79	19.8	19.2	18.6	-	-
	INPUT POWER	W	105	105	105	4.225k	4.225k	4.225k	-	-
		TOTAL W		-		4.330k	4.330k	4.330k	900	5.900k
	COP/COP CLASS	TOTAL(W/W) ※5("A"~"G")	-	-	-	3.70	3.70 / A	3.70	4.56	3.05
	Erp ※6 Pdsign	kW	-	-	-	-	-	-	-	-
	Erp ※6 Tbivalen	°C	-	-	-	-	-	-		
	Erp ※6 SCOP	(W/W)	-	-	-	-	-	-		
	Erp ※6 Annual consumption	kWh	-	-	-	-	-	-		
	Erp ※6 Class		-	-	-	-	-	-		
	POWER FACTOR	%	-	-	-	97	96	95	-	-
	NOISE INDOOR (H/M/L)	dB-A		46/40/34			-		/	/
		Power Level dB		64/57/51			-			
	NOISE OUTDOOR (H/L)	dB-A		-			55/-		/	/
		Power Level dB		-			71/-			
EXTRA LOW TEMP	Total CAPACITY(kW)/INPUT POWER(W)/COP					-				
MAX CURRENT(A)/MAX INPUT POWER(W)			0.90/115	0.89/115	0.87/115	30.0/6.450k	30.0/6.650k	30.0/6.850k	/	
STARTING CURRENT(A)/COMP OUTPUT(W)			-	-	-	19.8/3.0k	19.2/3.0k	18.6/3.0k	/	
NETWORK IMPEDANCE (ΩMAX.)				-			-			
FM OUTPUT (W)				90			90x2		/	
MOISTURE REMOVAL VOLUME		L/h(Pt/h)	9.0		(18.9)		-			
External static pressure		Pa		-						
I/D AIR FLOW	COOL	m³/min (ft³/min)		36/29/23 (1271/1024/812)						
	HEAT	m³/min (ft³/min)		36/29/23 (1271/1024/812)						
O/D AIR FLOW	COOL	m³/min (ft³/min)					135	(4767)		
	HEAT	m³/min (ft³/min)					120	(4238)		
REFRIGERANT TYPE, AMOUNT g(oz)						R410A	3.40k	(119.9)	/	
PROD	HEIGHT : H mm(inch)			319 (12-9/16)			1416 (55-3/4)		/	
	WIDTH : W mm(inch)			840 (33-3/32)			940 (37-1/32)		/	
	DEPTH : D mm(inch)			840 (33-3/32)			340 (13-13/32)		/	
PACK	HEIGHT : H mm			361			1556		/	
	WIDTH : W mm			929			1055		/	
	DEPTH : D mm			929			485		/	
MASS	(NET) kg(lb)			27 (60)			98 (216)		/	
	(GROSS) kg(lb)			34 (75)			108 (238)		/	
LAYERS LIMIT (actually)				11 (12)			1 (2)			
Operation Condition		Cool (DBT)		18°C ~ 32°C			-15°C ~ 46°C			
		Heat (DBT)		16°C ~ 30°C			-20°C ~ 24°C			
PIPING	PIPE DIAMETER mm (inch)		(Liquid)ø9.52(3/8) (Gas)ø15.88(5/8)			(Liquid)ø9.52(3/8) (Gas)ø15.88(5/8)				
	CONNECT METHOD, STD LENGTH m (ft)		flared type, 5.0(16.4)			flared type, 5.0(16.4)				
	PIPE LENGTH RANGE m (ft)		5 ~ 75 (16.4 ~ 246.1)						~	~
	I/D&O/D HEIGHT DIFFERENCE m (ft)		15 (OD located lower) / 30 (OD located higher) (49.2/98.4)							
	ADD GAS AMOUNT g/m (oz/ft)		50 (0.538)							
	PIPE LENGTH FOR ADDITIONAL GAS m (ft)		30 (98.4)							

*1: In case it is necessary to indicate the air flow volume in (l/s), the value in (m^3/min.) shall be multiplied by 16.7 and rounded down the decimal point.
*2: If the EUROVENT Certified models can be operated under the extra-low temperature condition, -7°C dry bulb and -8°C wet-bulb temperatures with rated voltage 230 V shall be used.
*3: Network Impedance shall be applicable for EUROPE and CHINA models.
*4: The annual consumption is calculated by multiplying the input power at 230 V (400 V) by an average of 500 hours per year in cooling mode.
*5: EER and COP classification is at 230 V (400 V) only in accordance with EU directive 2002/31/EC.
*6: SEER and SCOP classification is at 230V(400V) only in accordance with EN-14825. For heating, SCOP indicates the value of only Average heating season, Other fiche data indicates in an attached sheet.

Simultaneous (Twin) -Type

1-1. Unit Speci□cations

PE1

1. 4-Way Cassette Type S-36PU1E5A×2 / U-71PE1E8A

INDOOR		MODEL	S-36PU1E5A×2							
PANEL		MODEL	CZ-KPU21×2			-				
OUTDOOR		MODEL				U-71PE1E8A				
Branch pipe		MODEL	CZ-P155BK1							
PERFORMANCE TEST CONDITION			ISO5151 / EN14511 / EN14825 / EN12102							
POWER SUPPLY		ø, Hz	1ø 50Hz			3ø 50Hz				
		V	220	230	240	380	400	415	Min	Max
COOLING	CAPACITY	kW	7.1	7.1	7.1				3.2	8.2
		BTU/h	24200	24200	24200				10900	28000
	CURRENT	A	0.19×2	0.19×2	0.18×2	2.80	2.70	2.60	-	-
	INPUT POWER	W	20×2	20×2	20×2	1.760k	1.760k	1.760k	-	-
		TOTAL W		-		1.800k	1.800k	1.800k	560	2.700k
	ANNUAL CONSUMPTION	TOTAL kWh ※4		-		-	900	-	-	-
	EER/EER CLASS	TOTAL(W/W)※5("A"~"G")	-	-	-	3.94	3.94 / A	3.94	5.71	3.04
	Erp ※6 Pdsign	kW	-	-	-	-	7.1	-		
	Erp ※6 SEER	(W/W)	-	-	-	-	6.8	-		
	Erp ※6 Annual consumption	kWh	-	-	-	-	365	-		
	Erp ※6 Class		-	-	-	-	A++	-		
	POWER FACTOR	%	-	-	-	96	94	94	-	-
	NOISE INDOOR (H/M/L)	dB-A		30/28/27						
		Power Level dB		47/45/44						
	NOISE OUTDOOR (H/L)	dB-A					48/-			
		Power Level dB					65/-			
HEATING	CAPACITY	kW	8.0	8.0	8.0				2.8	9.0
		BTU/h	27300	27300	27300				9600	30700
	CURRENT	A	0.17×2	0.17×2	0.16×2	3.10	3.00	2.90	-	-
	INPUT POWER	W	20×2	20×2	20×2	1.960k	1.960k	1.960k	-	-
		TOTAL W		-		2.000k	2.000k	2.000k	500	2.900k
	COP/COP CLASS	TOTAL(W/W)※5("A"~"G")	-	-	-	4.00	4.00 / A	4.00	5.60	3.10
	Erp ※6 Pdsign	kW	-	-	-	-	7.1	-		
	Erp ※6 Tbivalen	°C	-	-	-	-	-8	-		
	Erp ※6 SCOP	(W/W)	-	-	-	-	4.0	-		
	Erp ※6 Annual consumption	kWh	-	-	-	-	2485	-		
	Erp ※6 Class		-	-	-	-	A+	-		
	POWER FACTOR	%	-	-	-	96	94	94	-	-
	NOISE INDOOR (H/M/L)	dB-A		30/28/27			-		/	/
		Power Level dB		47/45/44			-			
	NOISE OUTDOOR (H/L)	dB-A		-			50/-		/	/
		Power Level dB		-			67/-			
EXTRA LOW TEMP	Total CAPACITY(kW)/INPUT POWER(W)/COP					-				
MAX CURRENT(A)/MAX INPUT POWER(W)			0.19×2/20×2	0.19×2/20×2	0.18×2/20×2	7.0/4.150k	7.0/4.360k	7.0/4.530k	/	
STARTING CURRENT(A)/COMP OUTPUT(W)			-	-	-	3.10/2.0k	3.00/2.0k	2.90/2.0k	/	
NETWORK IMPEDANCE (ΩMAX.)				-			-			
FM OUTPUT (W)				60×2			90		/	
MOISTURE REMOVAL VOLUME		L/h(Pt/h)	4.2	(2.1×2)	(8.8)		-			
External static pressure		Pa		-						
I/D AIR FLOW	COOL	m^3/min (ft^3/min)		[14/13/12 (494/459/424)]×2						
	HEAT	m^3/min (ft^3/min)		[14/13/12 (494/459/424)]×2						
O/D AIR FLOW	COOL	m^3/min (ft^3/min)				60		(2119)		
	HEAT	m^3/min (ft^3/min)				60		(2119)		
REFRIGERANT TYPE, AMOUNT g(oz)						R410A	2.35k	(82.9)	/	
PROD	HEIGHT : H mm(inch)			256 (10-3/32)			996 (39-7/32)		/	
	WIDTH : W mm(inch)			840 (33-3/32)			940 (37-1/32)		/	
	DEPTH : D mm(inch)			840 (33-3/32)			340 (13-13/32)		/	
PACK	HEIGHT : H mm			298			1136		/	
	WIDTH : W mm			929			1055		/	
	DEPTH : D mm			929			485		/	
MASS	(NET) kg(lb)			23 (51)			71 (157)		/	
	(GROSS) kg(lb)			29 (64)			79 (174)		/	
LAYERS LIMIT (actually)				11 (12)			2 (3)			
Operation Condition		Cool (DBT)		18°C ~ 32°C			-15°C ~ 46°C			
		Heat (DBT)		16°C ~ 30°C			-20°C ~ 24°C			
PIPING	PIPE DIAMETER mm (inch)		(Liquid)ø6.35(1/4) (Gas)ø12.7(1/2)			(Liquid)ø9.52(3/8) (Gas)ø15.88(5/8)				
	CONNECT METHOD, STD LENGTH m (ft)		flared type, 5.0(16.4)			flared type, 5.0(16.4)				
	PIPE LENGTH RANGE m (ft)		5 ~ 50 (16.4 ~ 164.0)						~	~
	I/D&O/D HEIGHT DIFFERENCE m (ft)		15 (OD located lower) / 30 (OD located higher) (49.2/98.4)							
	ADD GAS AMOUNT g/m (oz/ft)		50 (0.538)							
	PIPE LENGTH FOR ADDITIONAL GAS m (ft)		30 (98.4)							

*1: In case it is necessary to indicate the air □ow volume in (l/s), the value in (m^3/min.) shall be multiplied by 16.7 and rounded down the decimal point.
*2: If the EUROVENT Certi□ed models can be operated under the □extra-low□temperature condition, -7□C dry bulb and -8□C wet-bulb temperatures with rated voltage 230 V shall be used.
*3: Network Impedance shall be applicable for EUROPE and CHINA models.
*4: The annual consumption is calculated by multiplying the input power at 230 V (400 V) by an average of 500 hours per year in cooling mode.
*5: EER and COP classification is at 230 V (400 V) only in accordance with EU directive 2002/31/EC.
*6: SEER and SCOP classification is at 230V(400V) only in accordance with EN-14825. For heating, SCOP indicates the value of only Average heating season, Other fiche data indicates in an attached sheet.

Simultaneous (Triple) -Type

1-1. Unit Speci□cations

PE1

1. 4-Way Cassette Type S-36PU1E5A×3 / U-100PE1E8A

INDOOR		MODEL	S-36PU1E5A×3							
PANEL		MODEL	CZ-KPU21×3			-				
OUTDOOR		MODEL				U-100PE1E8A				
Branch pipe		MODEL	CZ-P3HPC2							
PERFORMANCE TEST CONDITION			ISO5151 / EN14511 / EN14825 / EN12102							
POWER SUPPLY		ø, Hz	1ø 50Hz			3ø 50Hz				
		V	220	230	240	380	400	415	Min	Max
COOLING	CAPACITY	kW	10.0	10.0	10.0				3.3	12.5
		BTU/h	34100	34100	34100				11300	42700
	CURRENT	A	0.19×3	0.19×3	0.18×3	3.75	3.55	3.45	-	-
	INPUT POWER	W	20×3	20×3	20×3	2.320k	2.320k	2.320k	-	-
		TOTAL W		-		2.380k	2.380k	2.380k	840	3.700k
	ANNUAL CONSUMPTION	TOTAL kWh ※4		-		-	1190	-	-	-
	EER/EER CLASS	TOTAL(W/W)※5/("A"~"G")	-	-	-	4.20	4.20 / A	4.20	3.93	3.38
	Erp ※6 Pdsign	kW	-	-	-	-	10.0	-		
	Erp ※6 SEER	(W/W)	-	-	-	-	6.5	-		
	Erp ※6 Annual consumption	kWh	-	-	-	-	538	-		
	Erp ※6 Class		-	-	-	-	A++	-		
	POWER FACTOR	%	-	-	-	94	94	94	-	-
	NOISE INDOOR (H/M/L)	dB-A		30/28/27						
		Power Level dB		47/45/44						
	NOISE OUTDOOR (H/L)	dB-A					52/-			
		Power Level dB					69/-			
HEATING	CAPACITY	kW	11.2	11.2	11.2				4.1	14.0
		BTU/h	38200	38200	38200				14000	47800
	CURRENT	A	0.17×3	0.17×3	0.16×3	4.10	3.90	3.80	-	-
	INPUT POWER	W	20×3	20×3	20×3	2.540k	2.540k	2.540k	-	-
		TOTAL W		-		2.600k	2.600k	2.600k	900	4.400k
	COP/COP CLASS	TOTAL(W/W)※5/("A"~"G")	-	-	-	4.31	4.31 / A	4.31	4.56	3.18
	Erp ※6 Pdsign	kW	-	-	-	-	10.0	-	-	-
	Erp ※6 Tbivalen	°C	-	-	-	-	-10	-		
	Erp ※6 SCOP	(W/W)	-	-	-	-	4.2	-		
	Erp ※6 Annual consumption	kWh	-	-	-	-	3333	-		
	Erp ※6 Class		-	-	-	-	A+	-		
	POWER FACTOR	%	-	-	-	94	94	93	-	-
	NOISE INDOOR (H/M/L)	dB-A		30/28/27			-		/	/
		Power Level dB		47/45/44			-			
	NOISE OUTDOOR (H/L)	dB-A		-			52/-		/	/
		Power Level dB		-			69/-			
EXTRA LOW TEMP	Total CAPACITY(kW)/INPUT POWER(W)/COP					-				
MAX CURRENT(A)/MAX INPUT POWER(W)			0.19×3/20×3	0.19×3/20×3	0.18×3/20×3	9.00/5.550k	9.00/5.850k	9.00/6.100k	/	
STARTING CURRENT(A)/COMP OUTPUT(W)			-	-	-	4.10/3.0k	3.90/3.0k	3.80/3.0k	/	
NETWORK IMPEDANCE (ΩMAX.)				-			-			
FM OUTPUT (W)				60×3			90x2		/	
MOISTURE REMOVAL VOLUME		L/h(Pt/h)	6.0	(2.0×3)	(12.6)		-			
External static pressure		Pa		-						
I/D AIR FLOW	COOL	m^3/min (ft^3/min)		[14/13/12 (494/459/424)]×3						
	HEAT	m^3/min (ft^3/min)		[14/13/12 (494/459/424)]×3						
O/D AIR FLOW	COOL	m^3/min (ft^3/min)				110		(3885)		
	HEAT	m^3/min (ft^3/min)				95		(3355)		
REFRIGERANT TYPE, AMOUNT g(oz)						R410A	3.40k	(119.9)	/	
PROD	HEIGHT : H mm(inch)			256 (10-3/32)			1416 (55-3/4)		/	
	WIDTH : W mm(inch)			840 (33-3/32)			940 (37-1/32)		/	
	DEPTH : D mm(inch)			840 (33-3/32)			340 (13-13/32)		/	
PACK	HEIGHT : H mm			298			1556		/	
	WIDTH : W mm			929			1055		/	
	DEPTH : D mm			929			485		/	
MASS	(NET) kg(lb)			23 (51)			98 (216)		/	
	(GROSS) kg(lb)			29 (64)			108 (238)		/	
LAYERS LIMIT (actually)				11 (12)			1 (2)			
Operation Condition		Cool (DBT)		18°C ~ 32°C			-15°C ~ 46°C			
		Heat (DBT)		16°C ~ 30°C			-20°C ~ 24°C			
PIPING	PIPE DIAMETER mm (inch)		(Liquid)ø6.35(1/4) (Gas)ø12.7(1/2)			(Liquid)ø9.52(3/8) (Gas)ø15.88(5/8)				
	CONNECT METHOD, STD LENGTH m (ft)		flared type, 5.0(16.4)			flared type, 5.0(16.4)				
	PIPE LENGTH RANGE m (ft)			5 ~ 75 (16.4 ~ 246.1)					~	~
	I/D&O/D HEIGHT DIFFERENCE m (ft)		15 (OD located lower) / 30 (OD located higher) (49.2/98.4)							
	ADD GAS AMOUNT g/m (oz/ft)			50 (0.538)						
	PIPE LENGTH FOR ADDITIONAL GAS m (ft)			20 (65.6)						

*1: In case it is necessary to indicate the air □ow volume in (l/s), the value in (m^3/min.) shall be multiplied by 16.7 and rounded down the decimal point.
*2: If the EUROVENT Certi□ed models can be operated under the □extra-low□temperature condition, -7□C dry bulb and -8□C wet-bulb temperatures with rated voltage 230 V shall be used.
*3: Network Impedance shall be applicable for EUROPE and CHINA models.
*4: The annual consumption is calculated by multiplying the input power at 230 V (400 V) by an average of 500 hours per year in cooling mode.
*5: EER and COP classification is at 230 V (400 V) only in accordance with EU directive 2002/31/EC.
*6: SEER and SCOP classification is at 230V(400V) only in accordance with EN-14825. For heating, SCOP indicates the value of only Average heating season, Other fiche data indicates in an attached sheet.

Simultaneous (Double-Twin) -Type

1-1. Unit Speci□cations

PE1

1. 4-Way Cassette Type S-36PU1E5A×4 / U-125PE1E8A

INDOOR		MODEL	S-36PU1E5A×4							
PANEL		MODEL	CZ-KPU21×4			-				
OUTDOOR		MODEL				U-125PE1E8A				
Branch pipe		MODEL	CZ-P155BK1×3							
PERFORMANCE TEST CONDITION			ISO5151 / EN14511 / EN12102							
POWER SUPPLY		ø, Hz	1ø 50Hz			3ø 50Hz				
		V	220	230	240	380	400	415	Min	Max
COOLING	CAPACITY	kW	12.5	12.5	12.5				3.3	14.0
		BTU/h	42700	42700	42700				11300	47800
	CURRENT	A	0.19×4	0.19×4	0.18×4	5.50	5.20	5.05	-	-
	INPUT POWER	W	20×4	20×4	20×4	3.390k	3.390k	3.390k	-	-
		TOTAL W		-		3.470k	3.470k	3.470k	840	4.600k
	ANNUAL CONSUMPTION	TOTAL kWh ※4		-		-	1735	-	-	-
	EER/EER CLASS	TOTAL(W/W)※5/("A"~"G")	-	-	-	3.60	3.60 / A	3.60	3.93	3.04
	Erp ※6 Pdsign	kW	-	-	-	-	-	-		
	Erp ※6 SEER	(W/W)	-	-	-	-	-	-		
	Erp ※6 Annual consumption	kWh	-	-	-	-	-	-		
	Erp ※6 Class		-	-	-	-	-	-		
	POWER FACTOR	%	-	-	-	94	94	93	-	-
	NOISE INDOOR (H/M/L)	dB-A		30/28/27						
		Power Level dB		47/45/44						
	NOISE OUTDOOR (H/L)	dB-A					53/-			
		Power Level dB					70/-			
HEATING	CAPACITY	kW	14.0	14.0	14.0				4.1	16.0
		BTU/h	47800	47800	47800				14000	54600
	CURRENT	A	0.17×4	0.17×4	0.16×4	5.55	5.25	5.10	-	-
	INPUT POWER	W	20×4	20×4	20×4	3.420k	3.420k	3.420k	-	-
		TOTAL W		-		3.500k	3.500k	3.500k	900	5.200k
	COP/COP CLASS	TOTAL(W/W)※5/("A"~"G")	-	-	-	4.00	4.00 / A	4.00	4.56	3.08
	Erp ※6 Pdsign	kW	-	-	-	-	-	-	-	-
	Erp ※6 Tbivalen	°C	-	-	-	-	-	-		
	Erp ※6 SCOP	(W/W)	-	-	-	-	-	-		
	Erp ※6 Annual consumption	kWh	-	-	-	-	-	-		
	Erp ※6 Class		-	-	-	-	-	-		
	POWER FACTOR	%	-	-	-	94	94	93	-	-
	NOISE INDOOR (H/M/L)	dB-A		30/28/27			-		/	/
		Power Level dB		47/45/44			-			
	NOISE OUTDOOR (H/L)	dB-A		-			53/-		/	/
		Power Level dB		-			70/-			
EXTRA LOW TEMP	Total CAPACITY(kW)/INPUT POWER(W)/COP					-				
MAX CURRENT(A)/MAX INPUT POWER(W)			0.19×4/20×4	0.19×4/20×4	0.18×4/20×4	10.0/6.200k	10.0/6.500k	10.0/6.750k	/	
STARTING CURRENT(A)/COMP OUTPUT(W)			-	-	-	5.55/3.0k	5.25/3.0k	5.10/3.0k	/	
NETWORK IMPEDANCE (ΩMAX.)				-			-			
FM OUTPUT (W)				60×4			90x2		/	
MOISTURE REMOVAL VOLUME		L/h(Pt/h)	7.9	(1.98×4)	(16.6)		-			
External static pressure		Pa		-						
I/D AIR FLOW	COOL	m^3/min (ft^3/min)		[14/13/12 (494/459/424)]×4						
	HEAT	m^3/min (ft^3/min)		[14/13/12 (494/459/424)]×4						
O/D AIR FLOW	COOL	m^3/min (ft^3/min)				130		(4591)		
	HEAT	m^3/min (ft^3/min)				110		(3885)		
REFRIGERANT TYPE, AMOUNT g(oz)						R410A	3.40k	(119.9)	/	
PROD IM	HEIGHT : H mm(inch)			256 (10-3/32)			1416 (55-3/4)		/	
	WIDTH : W mm(inch)			840 (33-3/32)			940 (37-1/32)		/	
	DEPTH : D mm(inch)			840 (33-3/32)			340 (13-13/32)		/	
PACK IM	HEIGHT : H mm			298			1556		/	
	WIDTH : W mm			929			1055		/	
	DEPTH : D mm			929			485		/	
MASS	(NET) kg(lb)			23 (51)			98 (216)		/	
	(GROSS) kg(lb)			29 (64)			108 (238)		/	
LAYERS LIMIT (actually)				11 (12)			1 (2)			
Operation Condition		Cool (DBT)		18°C ~ 32°C			-15°C ~ 46°C			
		Heat (DBT)		16°C ~ 30°C			-20°C ~ 24°C			
PIPING	PIPE DIAMETER mm (inch)		(Liquid)ø6.35(1/4) (Gas)ø12.7(1/2)			(Liquid)ø9.52(3/8) (Gas)ø15.88(5/8)				
	CONNECT METHOD, STD LENGTH m (ft)		flared type, 5.0(16.4)			flared type, 5.0(16.4)				
	PIPE LENGTH RANGE m (ft)		5 ~ 75 (16.4 ~ 246.1)						~	~
	I/D&O/D HEIGHT DIFFERENCE m (ft)		15 (OD located lower) / 30 (OD located higher) (49.2/98.4)							
	ADD GAS AMOUNT g/m (oz/ft)		50 (0.538)							
	PIPE LENGTH FOR ADDITIONAL GAS m (ft)		20 (65.6)							

*1: In case it is necessary to indicate the air □ow volume in (l/s), the value in (m^3/min.) shall be multiplied by 16.7 and rounded down the decimal point.
*2: If the EUROVENT Certi□ed models can be operated under the □extra-low□temperature condition, -7□C dry bulb and -8□C wet-bulb temperatures with rated voltage 230 V shall be used.
*3: Network Impedance shall be applicable for EUROPE and CHINA models.
*4: The annual consumption is calculated by multiplying the input power at 230 V (400 V) by an average of 500 hours per year in cooling mode.
*5: EER and COP classification is at 230 V (400 V) only in accordance with EU directive 2002/31/EC.
*6: SEER and SCOP classification is at 230V(400V) only in accordance with EN-14825. For heating, SCOP indicates the value of only Average heating season, Other fiche data indicates in an attached sheet.

Simultaneous (Triple) -Type

1-1. Unit Speci□cations

PE1

1. 4-Way Cassette Type S-45PU1E5A×3 / U-125PE1E8A

INDOOR		MODEL	S-45PU1E5A×3							
PANEL		MODEL	CZ-KPU21×3			-				
OUTDOOR		MODEL				U-125PE1E8A				
Branch pipe		MODEL	CZ-P3HPC2							
PERFORMANCE TEST CONDITION			ISO5151 / EN14511 / EN12102							
POWER SUPPLY		ø, Hz	1ø 50Hz			3ø 50Hz				
		V	220	230	240	380	400	415	Min	Max
COOLING	CAPACITY	kW	12.5	12.5	12.5				3.3	14.0
		BTU/h	42700	42700	42700				11300	47800
	CURRENT	A	0.19×3	0.19×3	0.19×3	5.50	5.25	5.05	-	-
	INPUT POWER	W	20×3	20×3	20×3	3.410k	3.410k	3.410k	-	-
		TOTAL W		-		3.470k	3.470k	3.470k	840	4.600k
	ANNUAL CONSUMPTION	TOTAL kWh ※4		-		-	1735	-	-	-
	EER/EER CLASS	TOTAL(W/W)※5("A"~"G")	-	-	-	3.60	3.60 / A	3.60	3.93	3.04
	Erp ※6 Pdsign	kW	-	-	-	-	-	-		
	Erp ※6 SEER	(W/W)	-	-	-	-	-	-		
	Erp ※6 Annual consumption	kWh	-	-	-	-	-	-		
	Erp ※6 Class		-	-	-	-	-	-		
	POWER FACTOR	%	-	-	-	94	94	94	-	-
	NOISE INDOOR (H/M/L)	dB-A		31/28/27						
		Power Level dB		48/45/44						
	NOISE OUTDOOR (H/L)	dB-A					53/-			
		Power Level dB					70/-			
HEATING	CAPACITY	kW	14.0	14.0	14.0				4.1	16.0
		BTU/h	47800	47800	47800				14000	54600
	CURRENT	A	0.17×3	0.17×3	0.17×3	5.55	5.30	5.10	-	-
	INPUT POWER	W	20×3	20×3	20×3	3.440k	3.440k	3.440k	-	-
		TOTAL W		-		3.500k	3.500k	3.500k	900	5.200k
	COP/COP CLASS	TOTAL(W/W)※5("A"~"G")	-	-	-	4.00	4.00 / A	4.00	4.56	3.08
	Erp ※6 Pdsign	kW	-	-	-	-	-	-	-	-
	Erp ※6 Tbivalen	°C	-	-	-	-	-	-		
	Erp ※6 SCOP	(W/W)	-	-	-	-	-	-		
	Erp ※6 Annual consumption	kWh	-	-	-	-	-	-		
	Erp ※6 Class		-	-	-	-	-	-		
	POWER FACTOR	%	-	-	-	94	94	94	-	-
	NOISE INDOOR (H/M/L)	dB-A		31/28/27			-		/	/
		Power Level dB		48/45/44			-			
	NOISE OUTDOOR (H/L)	dB-A		-			53/-		/	/
		Power Level dB		-			70/-			
EXTRA LOW TEMP	Total CAPACITY(kW)/INPUT POWER(W)/COP					-				
MAX CURRENT(A)/MAX INPUT POWER(W)			0.19×3/20×3	0.19×3/20×3	0.18×3/20×3	10.0/6.200k	10.0/6.500k	10.0/6.750k	/	
STARTING CURRENT(A)/COMP OUTPUT(W)			-	-	-	5.55/3.0k	5.30/3.0k	5.10/3.0k	/	
NETWORK IMPEDANCE (ΩMAX.)				-			-			
FM OUTPUT (W)				60×3			90x2		/	
MOISTURE REMOVAL VOLUME		L/h(Pt/h)	7.9	(2.63×3)	(16.6)		-			
External static pressure		Pa		-						
I/D AIR FLOW	COOL	m^3/min (ft^3/min)		[15/13/12 (530/459/424)]×3						
	HEAT	m^3/min (ft^3/min)		[15/13/12 (530/459/424)]×3						
O/D AIR FLOW	COOL	m^3/min (ft^3/min)				130		(4591)		
	HEAT	m^3/min (ft^3/min)				110		(3885)		
REFRIGERANT TYPE, AMOUNT g(oz)						R410A	3.40k	(119.9)	/	
PROD DIM	HEIGHT : H mm(inch)			256 (10-3/32)			1416 (55-3/4)		/	
	WIDTH : W mm(inch)			840 (33-3/32)			940 (37-1/32)		/	
	DEPTH : D mm(inch)			840 (33-3/32)			340 (13-13/32)		/	
PACK DIM	HEIGHT : H mm			298			1556		/	
	WIDTH : W mm			929			1055		/	
	DEPTH : D mm			929			485		/	
MASS	(NET) kg(lb)			23 (51)			98 (216)		/	
	(GROSS) kg(lb)			29 (64)			108 (238)		/	
LAYERS LIMIT (actually)				11 (12)			1 (2)			
Operation Condition		Cool (DBT)		18°C ~ 32°C			-15°C ~ 46°C			
		Heat (DBT)		16°C ~ 30°C			-20°C ~ 24°C			
PIPING	PIPE DIAMETER mm (inch)		(Liquid)ø6.35(1/4) (Gas)ø12.7(1/2)			(Liquid)ø9.52(3/8) (Gas)ø15.88(5/8)				
	CONNECT METHOD, STD LENGTH m (ft)		flared type, 5.0(16.4)			flared type, 5.0(16.4)				
	PIPE LENGTH RANGE m (ft)		5 ~ 75 (16.4 ~ 246.1)						~	~
	I/D&O/D HEIGHT DIFFERENCE m (ft)		15 (OD located lower) / 30 (OD located higher) (49.2/98.4)							
	ADD GAS AMOUNT g/m (oz/ft)		50 (0.538)							
	PIPE LENGTH FOR ADDITIONAL GAS m (ft)		20 (65.6)							

*1: In case it is necessary to indicate the air □ow volume in (l/s), the value in (m^3/min.) shall be multiplied by 16.7 and rounded down the decimal point.
*2: If the EUROVENT Certi□ed models can be operated under the □extra-low□temperature condition, -7□C dry bulb and -8□C wet-bulb temperatures with rated voltage 230 V shall be used.
*3: Network Impedance shall be applicable for EUROPE and CHINA models.
*4: The annual consumption is calculated by multiplying the input power at 230 V (400 V) by an average of 500 hours per year in cooling mode.
*5: EER and COP classification is at 230 V (400 V) only in accordance with EU directive 2002/31/EC.
*6: SEER and SCOP classification is at 230V(400V) only in accordance with EN-14825. For heating, SCOP indicates the value of only Average heating season, Other fiche data indicates in an attached sheet.

Simultaneous (Twin) -Type

1-1. Unit Speci□cations

PE1

1. 4-Way Cassette Type S-50PU1E5A×2 / U-100PE1E8A

INDOOR		MODEL	S-50PU1E5A×2							
PANEL		MODEL	CZ-KPU21×2			-				
OUTDOOR		MODEL				U-100PE1E8A				
Branch pipe		MODEL	CZ-P155BK1							
PERFORMANCE TEST CONDITION			ISO5151 / EN14511 / EN14825 / EN12102							
POWER SUPPLY		ø, Hz	1ø 50Hz			3ø 50Hz				
		V	220	230	240	380	400	415	Min	Max
COOLING	CAPACITY	kW	10.0	10.0	10.0				3.3	12.5
		BTU/h	34100	34100	34100				11300	42700
	CURRENT	A	0.22×2	0.22×2	0.21×2	3.75	3.55	3.45	-	-
	INPUT POWER	W	25×2	25×2	25×2	2.330k	2.330k	2.330k	-	-
		TOTAL W		-		2.380k	2.380k	2.380k	840	3.700k
	ANNUAL CONSUMPTION	TOTAL kWh ※4		-		-	1190	-	-	-
	EER/EER CLASS	TOTAL(W/W)※5("A"~"G")	-	-	-	4.20	4.20 / A	4.20	3.93	3.38
	Erp ※6 Pdsign	kW	-	-	-	-	10.0	-		
	Erp ※6 SEER	(W/W)	-	-	-	-	6.5	-		
	Erp ※6 Annual consumption	kWh	-	-	-	-	538	-		
	Erp ※6 Class		-	-	-	-	A++	-		
	POWER FACTOR	%	-	-	-	94	95	94	-	-
	NOISE INDOOR (H/M/L)	dB-A		32/29/27						
		Power Level dB		49/46/44						
	NOISE OUTDOOR (H/L)	dB-A					52/-			
		Power Level dB					69/-			
HEATING	CAPACITY	kW	11.2	11.2	11.2				4.1	14.0
		BTU/h	38200	38200	38200				14000	47800
	CURRENT	A	0.20×2	0.20×2	0.19×2	4.10	3.90	3.80	-	-
	INPUT POWER	W	25×2	25×2	25×2	2.550k	2.550k	2.550k	-	-
		TOTAL W		-		2.600k	2.600k	2.600k	900	4.400k
	COP/COP CLASS	TOTAL(W/W)※5("A"~"G")	-	-	-	4.31	4.31 / A	4.31	4.56	3.18
	Erp ※6 Pdsign	kW	-	-	-	-	10.0	-	-	-
	Erp ※6 Tbivalen	°C	-	-	-	-	-10	-		
	Erp ※6 SCOP	(W/W)	-	-	-	-	4.2	-		
	Erp ※6 Annual consumption	kWh	-	-	-	-	3333	-		
	Erp ※6 Class		-	-	-	-	A+	-		
	POWER FACTOR	%	-	-	-	94	94	93	-	-
	NOISE INDOOR (H/M/L)	dB-A		32/29/27			-		/	/
		Power Level dB		49/46/44			-			
	NOISE OUTDOOR (H/L)	dB-A		-			52/-		/	/
		Power Level dB		-			69/-			
EXTRA LOW TEMP	Total CAPACITY(kW)/INPUT POWER(W)/COP					-				
MAX CURRENT(A)/MAX INPUT POWER(W)			0.22×2/25×2	0.22×2/25×2	0.21×2/25×2	9.00/5.550k	9.00/5.850k	9.00/6.100k	/	
STARTING CURRENT(A)/COMP OUTPUT(W)			-	-	-	4.10/3.0k	3.90/3.0k	3.80/3.0k	/	
NETWORK IMPEDANCE (ΩMAX.)				-			-			
FM OUTPUT (W)				60×2			90x2		/	
MOISTURE REMOVAL VOLUME		L/h(Pt/h)	6.0	(3.0×2)	(12.6)		-			
External static pressure		Pa		-						
I/D AIR FLOW	COOL	m^3/min (ft^3/min)		[16/13.5/12 (565/477/424)]×2						
	HEAT	m^3/min (ft^3/min)		[16/13.5/12 (565/477/424)]×2						
O/D AIR FLOW	COOL	m^3/min (ft^3/min)				110		(3885)		
	HEAT	m^3/min (ft^3/min)				95		(3355)		
REFRIGERANT TYPE, AMOUNT g(oz)						R410A	3.40k	(119.9)	/	
PROD	HEIGHT : H mm(inch)			256 (10-3/32)			1416 (55-3/4)		/	
	WIDTH : W mm(inch)			840 (33-3/32)			940 (37-1/32)		/	
	DEPTH : D mm(inch)			840 (33-3/32)			340 (13-13/32)		/	
PACK	HEIGHT : H mm			298			1556		/	
	WIDTH : W mm			929			1055		/	
	DEPTH : D mm			929			485		/	
MASS	(NET) kg(lb)			23 (51)			98 (216)		/	
	(GROSS) kg(lb)			29 (64)			108 (238)		/	
LAYERS LIMIT (actually)				11 (12)			1 (2)			
Operation Condition		Cool (DBT)		18°C ~ 32°C			-15°C ~ 46°C			
		Heat (DBT)		16°C ~ 30°C			-20°C ~ 24°C			
PIPING	PIPE DIAMETER mm (inch)		(Liquid)ø6.35(1/4) (Gas)ø12.7(1/2)			(Liquid)ø9.52(3/8) (Gas)ø15.88(5/8)				
	CONNECT METHOD, STD LENGTH m (ft)		flared type, 5.0(16.4)			flared type, 5.0(16.4)				
	PIPE LENGTH RANGE m (ft)		5 ~ 75 (16.4 ~ 246.1)						~	~
	I/D&O/D HEIGHT DIFFERENCE m (ft)		15 (OD located lower) / 30 (OD located higher) (49.2/98.4)							
	ADD GAS AMOUNT g/m (oz/ft)		50 (0.538)							
	PIPE LENGTH FOR ADDITIONAL GAS m (ft)		30 (98.4)							

*1: In case it is necessary to indicate the air □ow volume in (l/s), the value in (m^3/min.) shall be multiplied by 16.7 and rounded down the decimal point.
*2: If the EUROVENT Certi□ed models can be operated under the □extra-low□temperature condition, -7□C dry bulb and -8□C wet-bulb temperatures with rated voltage 230 V shall be used.
*3: Network Impedance shall be applicable for EUROPE and CHINA models.
*4: The annual consumption is calculated by multiplying the input power at 230 V (400 V) by an average of 500 hours per year in cooling mode.
*5: EER and COP classification is at 230 V (400 V) only in accordance with EU directive 2002/31/EC.
*6: SEER and SCOP classification is at 230V(400V) only in accordance with EN-14825. For heating, SCOP indicates the value of only Average heating season, Other fiche data indicates in an attached sheet.

Simultaneous (Triple) -Type

1-1. Unit Speci□cations

PE1

1. 4-Way Cassette Type S-50PU1E5A×3 / U-140PE1E8A

INDOOR		MODEL	S-50PU1E5A×3							
PANEL		MODEL	CZ-KPU21×3			-				
OUTDOOR		MODEL				U-140PE1E8A				
Branch pipe		MODEL	CZ-P3HPC2							
PERFORMANCE TEST CONDITION			ISO5151 / EN14511 / EN12102							
POWER SUPPLY		ø, Hz	1ø 50Hz			3ø 50Hz				
		V	220	230	240	380	400	415	Min	Max
COOLING	CAPACITY	kW	14.0	14.0	14.0				3.3	15.5
		BTU/h	47800	47800	47800				11300	52900
	CURRENT	A	0.22×3	0.22×3	0.21×3	6.80	6.50	6.25	-	-
	INPUT POWER	W	25×3	25×3	25×3	4.235k	4.235k	4.235k	-	-
		TOTAL W		-		4.310k	4.310k	4.310k	840	6.000k
	ANNUAL CONSUMPTION	TOTAL kWh ※4		-		-	2155	-	-	-
	EER/EER CLASS	TOTAL(W/W)※5("A"~"G")	-	-	-	3.25	3.25 / A	3.25	3.93	2.58
	Erp ※6 Pdsign	kW	-	-	-	-	-	-		
	Erp ※6 SEER	(W/W)	-	-	-	-	-	-		
	Erp ※6 Annual consumption	kWh	-	-	-	-	-	-		
	Erp ※6 Class		-	-	-	-	-	-		
	POWER FACTOR	%	-	-	-	95	94	94	-	-
	NOISE INDOOR (H/M/L)	dB-A		32/29/27						
		Power Level dB		49/46/44						
	NOISE OUTDOOR (H/L)	dB-A					54/-			
		Power Level dB					71/-			
HEATING	CAPACITY	kW	16.0	16.0	16.0				4.1	18.0
		BTU/h	54600	54600	54600				14000	61400
	CURRENT	A	0.20×3	0.20×3	0.19×3	6.90	6.55	6.30	-	-
	INPUT POWER	W	25×3	25×3	25×3	4.255k	4.255k	4.255k	-	-
		TOTAL W		-		4.330k	4.330k	4.330k	900	5.900k
	COP/COP CLASS	TOTAL(W/W)※5("A"~"G")	-	-	-	3.70	3.70 / A	3.70	4.56	3.05
	Erp ※6 Pdsign	kW	-	-	-	-	-	-	-	-
	Erp ※6 Tbivalen	°C	-	-	-	-	-	-		
	Erp ※6 SCOP	(W/W)	-	-	-	-	-	-		
	Erp ※6 Annual consumption	kWh	-	-	-	-	-	-		
	Erp ※6 Class		-	-	-	-	-	-		
	POWER FACTOR	%	-	-	-	94	94	94	-	-
	NOISE INDOOR (H/M/L)	dB-A		32/29/27			-		/	/
		Power Level dB		49/46/44			-			
	NOISE OUTDOOR (H/L)	dB-A		-			55/-		/	/
		Power Level dB		-			71/-			
EXTRA LOW TEMP	Total CAPACITY(kW)/INPUT POWER(W)/COP					-				
MAX CURRENT(A)/MAX INPUT POWER(W)			0.22×3/25×3	0.22×3/25×3	0.21×3/25×3	11.0/6.800k	11.0/7.150k	11.0/7.450k	/	
STARTING CURRENT(A)/COMP OUTPUT(W)			-	-	-	6.90/3.0k	6.55/3.0k	6.30/3.0k	/	
NETWORK IMPEDANCE (ΩMAX.)				-			-			
FM OUTPUT (W)				60×3			90x2		/	
MOISTURE REMOVAL VOLUME		L/h(Pt/h)	9.0	(3.0×3)	(18.9)		-			
External static pressure		Pa		-						
I/D AIR FLOW	COOL	m³/min (ft³/min)		[16/13.5/12 (565/477/424)]×3						
	HEAT	m³/min (ft³/min)		[16/13.5/12 (565/477/424)]×3						
O/D AIR FLOW	COOL	m³/min (ft³/min)				135		(4767)		
	HEAT	m³/min (ft³/min)				120		(4238)		
REFRIGERANT TYPE, AMOUNT g(oz)						R410A	3.40k	(119.9)	/	
PROD IM	HEIGHT : H mm(inch)			256 (10-3/32)			1416 (55-3/4)		/	
	WIDTH : W mm(inch)			840 (33-3/32)			940 (37-1/32)		/	
	DEPTH : D mm(inch)			840 (33-3/32)			340 (13-13/32)		/	
PACK DIM	HEIGHT : H mm			298			1556		/	
	WIDTH : W mm			929			1055		/	
	DEPTH : D mm			929			485		/	
MASS	(NET) kg(lb)			23 (51)			98 (216)		/	
	(GROSS) kg(lb)			29 (64)			108 (238)		/	
LAYERS LIMIT (actually)				11 (12)			1 (2)			
Operation Condition		Cool (DBT)		18°C ~ 32°C			-15°C ~ 46°C			
		Heat (DBT)		16°C ~ 30°C			-20°C ~ 24°C			
PIPING	PIPE DIAMETER mm (inch)		(Liquid)ø6.35(1/4) (Gas)ø12.7(1/2)			(Liquid)ø9.52(3/8) (Gas)ø15.88(5/8)				
	CONNECT METHOD, STD LENGTH m (ft)		flared type, 5.0(16.4)			flared type, 5.0(16.4)				
	PIPE LENGTH RANGE m (ft)			5 ~ 75 (16.4 ~ 246.1)					~	~
	I/D&O/D HEIGHT DIFFERENCE m (ft)		15 (OD located lower) / 30 (OD located higher) (49.2/98.4)							
	ADD GAS AMOUNT g/m (oz/ft)			50 (0.538)						
	PIPE LENGTH FOR ADDITIONAL GAS m (ft)			20 (65.6)						

*1: In case it is necessary to indicate the air □ow volume in (l/s), the value in (m³/min.) shall be multiplied by 16.7 and rounded down the decimal point.
*2: If the EUROVENT Certi□ed models can be operated under the □extra-low□temperature condition, -7□C dry bulb and -8□C wet-bulb temperatures with rated voltage 230 V shall be used.
*3: Network Impedance shall be applicable for EUROPE and CHINA models.
*4: The annual consumption is calculated by multiplying the input power at 230 V (400 V) by an average of 500 hours per year in cooling mode.
*5: EER and COP classification is at 230 V (400 V) only in accordance with EU directive 2002/31/EC.
*6: SEER and SCOP classification is at 230V(400V) only in accordance with EN-14825. For heating, SCOP indicates the value of only Average heating season, Other fiche data indicates in an attached sheet.

Simultaneous (Twin) -Type

1-1. Unit Specifications

PE1

1. 4-Way Cassette Type S-60PU1E5A×2 / U-125PE1E8A

INDOOR		MODEL	S-60PU1E5A×2							
PANEL		MODEL	CZ-KPU21×2			-				
OUTDOOR		MODEL				U-125PE1E8A				
Branch pipe		MODEL	CZ-P155BK1							
PERFORMANCE TEST CONDITION			ISO5151 / EN14511 / EN12102							
POWER SUPPLY		ø, Hz	1ø 50Hz			3ø 50Hz				
		V	220	230	240	380	400	415	Min	Max
COOLING	CAPACITY	kW	12.5	12.5	12.5				3.3	14.0
		BTU/h	42700	42700	42700				11300	47800
	CURRENT	A	0.32×2	0.31×2	0.30×2	5.50	5.20	5.05	-	-
	INPUT POWER	W	35×2	35×2	35×2	3.400k	3.400k	3.400k	-	-
		TOTAL W		-		3.470k	3.470k	3.470k	840	4.600k
	ANNUAL CONSUMPTION	TOTAL kWh ※4		-		-	1735	-	-	-
	EER/EER CLASS	TOTAL(W/W)※5("A"~"G")	-	-	-	3.60	3.60 / A	3.60	3.93	3.04
	Erp ※6 Pdsign	kW	-	-	-	-	-	-		
	Erp ※6 SEER	(W/W)	-	-	-	-	-	-		
	Erp ※6 Annual consumption	kWh	-	-	-	-	-	-		
	Erp ※6 Class		-	-	-	-	-	-		
	POWER FACTOR	%	-	-	-	94	94	94	-	-
	NOISE INDOOR (H/M/L)	dB-A		36/31/28						
		Power Level dB		53/48/45						
	NOISE OUTDOOR (H/L)	dB-A					53/-			
		Power Level dB					70/-			
HEATING	CAPACITY	kW	14.0	14.0	14.0				4.1	16.0
		BTU/h	47800	47800	47800				14000	54600
	CURRENT	A	0.30×2	0.30×2	0.29×2	5.55	5.25	5.10	-	-
	INPUT POWER	W	35×2	35×2	35×2	3.430k	3.430k	3.430k	-	-
		TOTAL W		-		3.500k	3.500k	3.500k	900	5.200k
	COP/COP CLASS	TOTAL(W/W)※5("A"~"G")	-	-	-	4.00	4.00 / A	4.00	4.56	3.08
	Erp ※6 Pdsign	kW	-	-	-	-	-	-	-	-
	Erp ※6 Tbivalen	°C	-	-	-	-	-	-		
	Erp ※6 SCOP	(W/W)	-	-	-	-	-	-		
	Erp ※6 Annual consumption	kWh	-	-	-	-	-	-		
	Erp ※6 Class		-	-	-	-	-	-		
	POWER FACTOR	%	-	-	-	94	94	94	-	-
	NOISE INDOOR (H/M/L)	dB-A		36/31/28			-		/	/
		Power Level dB		53/48/45			-			
	NOISE OUTDOOR (H/L)	dB-A		-			53/-		/	/
		Power Level dB		-			70/-			
EXTRA LOW TEMP	Total CAPACITY(kW)/INPUT POWER(W)/COP					-				
MAX CURRENT(A)/MAX INPUT POWER(W)			0.32×2/35×2	0.31×2/35×2	0.30×2/35×2	10.0/6.200k	10.0/6.500k	10.0/6.750k	/	
STARTING CURRENT(A)/COMP OUTPUT(W)			-	-	-	5.55/3.0k	5.25/3.0k	5.10/3.0k	/	
NETWORK IMPEDANCE (ΩMAX.)				-			-			
FM OUTPUT (W)				60×2			90x2		/	
MOISTURE REMOVAL VOLUME		L/h(Pt/h)	7.9	(3.95×2)	(16.6)		-			
External static pressure		Pa		-						
I/D AIR FLOW	COOL	m^3/min (ft^3/min)		[21/17/14 (742/600/494)]×2						
	HEAT	m^3/min (ft^3/min)		[21/17/14 (742/600/494)]×2						
O/D AIR FLOW	COOL	m^3/min (ft^3/min)				130		(4591)		
	HEAT	m^3/min (ft^3/min)				110		(3885)		
REFRIGERANT TYPE, AMOUNT g(oz)						R410A	3.40k	(119.9)	/	
PROD DIM	HEIGHT : H mm(inch)			256 (10-3/32)			1416 (55-3/4)		/	
	WIDTH : W mm(inch)			840 (33-3/32)			940 (37-1/32)		/	
	DEPTH : D mm(inch)			840 (33-3/32)			340 (13-13/32)		/	
PACK DIM	HEIGHT : H mm			298			1556		/	
	WIDTH : W mm			929			1055		/	
	DEPTH : D mm			929			485		/	
MASS	(NET) kg(lb)			24 (53)			98 (216)		/	
	(GROSS) kg(lb)			30 (67)			108 (238)		/	
LAYERS LIMIT (actually)				11 (12)			1 (2)			
Operation Condition		Cool (DBT)		18°C ~ 32°C			-15°C ~ 46°C			
		Heat (DBT)		16°C ~ 30°C			-20°C ~ 24°C			
PIPING	PIPE DIAMETER mm (inch)		(Liquid)ø9.52(3/8) (Gas)ø15.88(5/8)			(Liquid)ø9.52(3/8) (Gas)ø15.88(5/8)				
	CONNECT METHOD, STD LENGTH m (ft)		flared type, 5.0(16.4)			flared type, 5.0(16.4)				
	PIPE LENGTH RANGE m (ft)		5 ~ 75 (16.4 ~ 246.1)						~	~
	I/D&O/D HEIGHT DIFFERENCE m (ft)		15 (OD located lower) / 30 (OD located higher) (49.2/98.4)							
	ADD GAS AMOUNT g/m (oz/ft)		50 (0.538)							
	PIPE LENGTH FOR ADDITIONAL GAS m (ft)		30 (98.4)							

*1: In case it is necessary to indicate the air flow volume in (l/s), the value in (m^3/min.) shall be multiplied by 16.7 and rounded down the decimal point.
*2: If the EUROVENT Certified models can be operated under the extra-low temperature condition, -7°C dry bulb and -8°C wet-bulb temperatures with rated voltage 230 V shall be used.
*3: Network Impedance shall be applicable for EUROPE and CHINA models.
*4: The annual consumption is calculated by multiplying the input power at 230 V (400 V) by an average of 500 hours per year in cooling mode.
*5: EER and COP classification is at 230 V (400 V) only in accordance with EU directive 2002/31/EC.
*6: SEER and SCOP classification is at 230V(400V) only in accordance with EN-14825. For heating, SCOP indicates the value of only Average heating season, Other fiche data indicates in an attached sheet.

Single-Type

1-1. Unit Specifications

PE1

1. 4-Way Cassette Type S-71PU1E5A / U-71PE1E8A

INDOOR		MODEL	S-71PU1E5A							
PANEL		MODEL	CZ-KPU21			-				
OUTDOOR		MODEL				U-71PE1E8A				
Branch pipe		MODEL	-							
PERFORMANCE TEST CONDITION			ISO5151 / EN14511 / EN14825 / EN12102							
POWER SUPPLY		ø, Hz	1ø 50Hz			3ø 50Hz				
		V	220	230	240	380	400	415	Min	Max
COOLING	CAPACITY	kW	7.1	7.1	7.1				3.2	8.0
		BTU/h	24200	24200	24200				10900	27300
	CURRENT	A	0.36	0.33	0.32	2.80	2.70	2.60	-	-
	INPUT POWER	W	40	40	40	1.760k	1.760k	1.760k	-	-
		TOTAL W		-		1.800k	1.800k	1.800k	560	2.650k
	ANNUAL CONSUMPTION	TOTAL kWh ※4		-		-	900	-	-	-
	EER/EER CLASS	TOTAL(W/W)※5("A"~"G")	-	-	-	3.94	3.94 / A	3.94	5.71	3.02
	Erp ※6 Pdsign	kW	-	-	-	-	7.1	-		
	Erp ※6 SEER	(W/W)	-	-	-	-	6.8	-		
	Erp ※6 Annual consumption	kWh	-	-	-	-	365	-		
	Erp ※6 Class		-	-	-	-	A++	-		
	POWER FACTOR	%	-	-	-	96	94	94	-	-
	NOISE INDOOR (H/M/L)	dB-A		37/31/28						
		Power Level dB		54/48/45						
	NOISE OUTDOOR (H/L)	dB-A					48			
		Power Level dB					65			
HEATING	CAPACITY	kW	8.0	8.0	8.0				2.8	9.0
		BTU/h	27300	27300	27300				9600	30700
	CURRENT	A	0.35	0.32	0.31	3.10	3.00	2.90	-	-
	INPUT POWER	W	40	40	40	1.960k	1.960k	1.960k	-	-
		TOTAL W		-		2.000k	2.000k	2.000k	500	2.900k
	COP/COP CLASS	TOTAL(W/W)※5("A"~"G")	-	-	-	4.00	4.00 / A	4.00	5.60	3.10
	Erp ※6 Pdsign	kW	-	-	-	-	7.1	-		
	Erp ※6 Tbivalen	°C	-	-	-	-	-9	-		
	Erp ※6 SCOP	(W/W)	-	-	-	-	4.0	-		
	Erp ※6 Annual consumption	kWh	-	-	-	-	2485	-		
	Erp ※6 Class		-	-	-	-	A+	-		
	POWER FACTOR	%	-	-	-	96	94	94	-	-
	NOISE INDOOR (H/M/L)	dB-A		37/31/28			-		/	/
		Power Level dB		54/48/45			-			
	NOISE OUTDOOR (H/L)	dB-A		-			50		/	/
		Power Level dB		-			67			
EXTRA LOW TEMP	Total CAPACITY(kW)/INPUT POWER(W)/COP					-				
MAX CURRENT(A)/MAX INPUT POWER(W)			0.36/40	0.33/40	0.32/40	7.0/4.150k	7.0/4.360k	7.0/4.530k	/	
STARTING CURRENT(A)/COMP OUTPUT(W)			-	-	-	3.10/2.0k	3.00/2.0k	2.90/2.0k	/	
NETWORK IMPEDANCE (ΩMAX.)				-			-			
FM OUTPUT (W)				60			90		/	
MOISTURE REMOVAL VOLUME		L/h(Pt/h)	4.2		(8.8)		-			
External static pressure		Pa		-						
I/D AIR FLOW	COOL	m^3/min (ft^3/min)		22/17/14 (777/600/494)						
	HEAT	m^3/min (ft^3/min)		22/17/14 (777/600/494)						
O/D AIR FLOW	COOL	m^3/min (ft^3/min)				60		(2119)		
	HEAT	m^3/min (ft^3/min)				60		(2119)		
REFRIGERANT TYPE, AMOUNT g(oz)						R410A	2.35k	(82.9)	/	
PROD	HEIGHT : H mm(inch)			256 (10-3/32)			996 (39-7/32)		/	
	WIDTH : W mm(inch)			840 (33-3/32)			940 (37-1/32)		/	
	DEPTH : D mm(inch)			840 (33-3/32)			340 (13-13/32)		/	
PACK	HEIGHT : H mm			298			1136		/	
	WIDTH : W mm			929			1055		/	
	DEPTH : D mm			929			485		/	
MASS	(NET) kg(lb)			24 (53)			71 (157)		/	
	(GROSS) kg(lb)			30 (67)			79 (174)		/	
LAYERS LIMIT (actually)				11 (12)			2 (3)			
Operation Condition		Cool (DBT)		18°C ~ 32°C			-15°C ~ 46°C			
		Heat (DBT)		16°C ~ 30°C			-20°C ~ 24°C			
PIPING	PIPE DIAMETER mm (inch)		(Liquid)ø9.52(3/8) (Gas)ø15.88(5/8)			(Liquid)ø9.52(3/8) (Gas)ø15.88(5/8)				
	CONNECT METHOD, STD LENGTH m (ft)		flared type, 5.0(16.4)			flared type, 5.0(16.4)				
	PIPE LENGTH RANGE m (ft)		5 ~ 50 (16.4 ~ 164.0)						~	~
	I/D&O/D HEIGHT DIFFERENCE m (ft)		15 (OD located lower) / 30 (OD located higher) (49.2/98.4)							
	ADD GAS AMOUNT g/m (oz/ft)		50 (0.538)							
	PIPE LENGTH FOR ADDITIONAL GAS m (ft)		30 (98.4)							

*1: In case it is necessary to indicate the air flow volume in (l/s), the value in (m^3/min.) shall be multiplied by 16.7 and rounded down the decimal point.
*2: If the EUROVENT Certified models can be operated under the extra-low temperature condition, -7°C dry bulb and -8°C wet-bulb temperatures with rated voltage 230 V shall be used.
*3: Network Impedance shall be applicable for EUROPE and CHINA models.
*4: The annual consumption is calculated by multiplying the input power at 230 V (400 V) by an average of 500 hours per year in cooling mode.
*5: EER and COP classification is at 230 V (400 V) only in accordance with EU directive 2002/31/EC.
*6: SEER and SCOP classification is at 230V(400V) only in accordance with EN-14825. For heating, SCOP indicates the value of only Average heating season, Other fiche data indicates in an attached sheet.

Simultaneous (Twin) -Type

1-1. Unit Speci□cations

PE1

1. 4-Way Cassette Type S-71PU1E5A×2 / U-140PE1E8A

INDOOR		MODEL	S-71PU1E5A×2							
PANEL		MODEL	CZ-KPU21×2			-				
OUTDOOR		MODEL				U-140PE1E8A				
Branch pipe		MODEL	CZ-P155BK1							
PERFORMANCE TEST CONDITION			ISO5151 / EN14511 / EN12102							
POWER SUPPLY		ø, Hz	1ø 50Hz			3ø 50Hz				
		V	220	230	240	380	400	415	Min	Max
COOLING	CAPACITY	kW	14.0	14.0	14.0				3.3	15.5
		BTU/h	47800	47800	47800				11300	52900
	CURRENT	A	0.36×2	0.33×2	0.32×2	6.80	6.50	6.25	-	-
	INPUT POWER	W	40×2	40×2	40×2	4.230k	4.230k	4.230k	-	-
		TOTAL W		-		4.310k	4.310k	4.310k	840	6.000k
	ANNUAL CONSUMPTION	TOTAL kWh ※4		-		-	2155	-	-	-
	EER/EER CLASS	TOTAL(W/W) ※5("A"~"G")	-	-	-	3.25	3.25 / A	3.25	3.93	2.58
	Erp ※6 Pdsign	kW	-	-	-	-	-	-		
	Erp ※6 SEER	(W/W)	-	-	-	-	-	-		
	Erp ※6 Annual consumption	kWh	-	-	-	-	-	-		
	Erp ※6 Class		-	-	-	-	-	-		
	POWER FACTOR	%	-	-	-	95	94	94	-	-
	NOISE INDOOR (H/M/L)	dB-A		37/31/28						
		Power Level dB		54/48/45						
	NOISE OUTDOOR (H/L)	dB-A					54/-			
		Power Level dB					71/-			
HEATING	CAPACITY	kW	16.0	16.0	16.0				4.1	18.0
		BTU/h	54600	54600	54600				14000	61400
	CURRENT	A	0.35×2	0.32×2	0.31×2	6.90	6.55	6.30	-	-
	INPUT POWER	W	40×2	40×2	40×2	4.250k	4.250k	4.250k	-	-
		TOTAL W		-		4.330k	4.330k	4.330k	900	5.900k
	COP/COP CLASS	TOTAL(W/W) ※5("A"~"G")	-	-	-	3.70	3.70 / A	3.70	4.56	3.05
	Erp ※6 Pdsign	kW	-	-	-	-	-	-	-	-
	Erp ※6 Tbivalen	°C	-	-	-	-	-	-		
	Erp ※6 SCOP	(W/W)	-	-	-	-	-	-		
	Erp ※6 Annual consumption	kWh	-	-	-	-	-	-		
	Erp ※6 Class		-	-	-	-	-	-		
	POWER FACTOR	%	-	-	-	94	94	94	-	-
	NOISE INDOOR (H/M/L)	dB-A		37/31/28			-		/	/
		Power Level dB		54/48/45			-			
	NOISE OUTDOOR (H/L)	dB-A		-			55/-		/	/
		Power Level dB		-			71/-			
EXTRA LOW TEMP	Total CAPACITY(kW)/INPUT POWER(W)/COP					-				
MAX CURRENT(A)/MAX INPUT POWER(W)			0.36×2/40×2	0.33×2/40×2	0.32×2/40×2	11.0/6.800k	11.0/7.150k	11.0/7.450k	/	
STARTING CURRENT(A)/COMP OUTPUT(W)			-	-	-	6.90/3.0k	6.55/3.0k	6.30/3.0k	/	
NETWORK IMPEDANCE (ΩMAX.)				-			-			
FM OUTPUT (W)				60×2			90x2		/	
MOISTURE REMOVAL VOLUME		L/h(Pt/h)	9.0	(4.5×2)	(18.9)		-			
External static pressure		Pa		-						
I/D AIR FLOW	COOL	m³/min (ft³/min)		[22/17/14 (777/600/494)]×2						
	HEAT	m³/min (ft³/min)		[22/17/14 (777/600/494)]×2						
O/D AIR FLOW	COOL	m³/min (ft³/min)				135		(4767)		
	HEAT	m³/min (ft³/min)				120		(4238)		
REFRIGERANT TYPE, AMOUNT g(oz)						R410A	3.40k	(119.9)	/	
PROD	HEIGHT : H mm(inch)			256 (10-3/32)			1416 (55-3/4)		/	
	WIDTH : W mm(inch)			840 (33-3/32)			940 (37-1/32)		/	
	DEPTH : D mm(inch)			840 (33-3/32)			340 (13-13/32)		/	
PACK	HEIGHT : H mm			298			1556		/	
	WIDTH : W mm			929			1055		/	
	DEPTH : D mm			929			485		/	
MASS	(NET) kg(lb)			24 (53)			98 (216)		/	
	(GROSS) kg(lb)			30 (67)			108 (238)		/	
LAYERS LIMIT (actually)				11 (12)			1 (2)			
Operation Condition		Cool (DBT)		18°C ~ 32°C			-15°C ~ 46°C			
		Heat (DBT)		16°C ~ 30°C			-20°C ~ 24°C			
PIPING	PIPE DIAMETER mm (inch)		(Liquid)ø9.52(3/8) (Gas)ø15.88(5/8)			(Liquid)ø9.52(3/8) (Gas)ø15.88(5/8)				
	CONNECT METHOD, STD LENGTH m (ft)		flared type, 5.0(16.4)			flared type, 5.0(16.4)				
	PIPE LENGTH RANGE m (ft)		5 ~ 75 (16.4 ~ 246.1)						~	~
	I/D&O/D HEIGHT DIFFERENCE m (ft)		15 (OD located lower) / 30(OD located higher) (49.2/98.4)							
	ADD GAS AMOUNT g/m (oz/ft)		50 (0.538)							
	PIPE LENGTH FOR ADDITIONAL GAS m (ft)		30 (98.4)							

*1: In case it is necessary to indicate the air □ow volume in (l/s), the value in (m^3/min.) shall be multiplied by 16.7 and rounded down the decimal point.
*2: If the EUROVENT Certi□ed models can be operated under the □extra-low□temperature condition, -7□C dry bulb and -8□C wet-bulb temperatures with rated voltage 230 V shall be used.
*3: Network Impedance shall be applicable for EUROPE and CHINA models.
*4: The annual consumption is calculated by multiplying the input power at 230 V (400 V) by an average of 500 hours per year in cooling mode.
*5: EER and COP classification is at 230 V (400 V) only in accordance with EU directive 2002/31/EC.
*6: SEER and SCOP classification is at 230V(400V) only in accordance with EN-14825. For heating, SCOP indicates the value of only Average heating season, Other fiche data indicates in an attached sheet.

Single-Type

1-1. Unit Speci□cations

PE1

1. 4-Way Cassette Type S-100PU1E5A / U-100PE1E8A

INDOOR		MODEL	S-100PU1E5A							
PANEL		MODEL	CZ-KPU21			-				
OUTDOOR		MODEL				U-100PE1E8A				
Branch pipe		MODEL	-							
PERFORMANCE TEST CONDITION			ISO5151 / EN14511 / EN14825 / EN12102							
POWER SUPPLY		ø, Hz	1ø 50Hz			3ø 50Hz				
		V	220	230	240	380	400	415	Min	Max
COOLING	CAPACITY	kW	10.0	10.0	10.0				3.3	12.5
		BTU/h	34100	34100	34100				11300	42700
	CURRENT	A	0.73	0.71	0.71	3.70	3.50	3.40	-	-
	INPUT POWER	W	95	95	95	2.285k	2.285k	2.285k	-	-
		TOTAL W		-		2.380k	2.380k	2.380k	840	3.700k
	ANNUAL CONSUMPTION	TOTAL kWh ※4		-		-	1190	-	-	-
	EER/EER CLASS	TOTAL(W/W)※5("A"~"G")	-	-	-	4.20	4.20 / A	4.20	3.93	3.38
	Erp ※6 Pdsign	kW	-	-	-	-	10.0	-		
	Erp ※6 SEER	(W/W)	-	-	-	-	6.5	-		
	Erp ※6 Annual consumption	kWh	-	-	-	-	538	-		
	Erp ※6 Class		-	-	-	-	A++	-		
	POWER FACTOR	%	-	-	-	94	94	93	-	-
	NOISE INDOOR (H/M/L)	dB-A		44/38/32						
		Power Level dB		62/55/49						
	NOISE OUTDOOR (H/L)	dB-A					52/-			
		Power Level dB					69/-			
HEATING	CAPACITY	kW	11.2	11.2	11.2				4.1	14.0
		BTU/h	38200	38200	38200				14000	47800
	CURRENT	A	0.66	0.65	0.64	4.05	3.85	3.75	-	-
	INPUT POWER	W	85	85	85	2.515k	2.515k	2.515k	-	-
		TOTAL W		-		2.600k	2.600k	2.600k	900	4.400k
	COP/COP CLASS	TOTAL(W/W)※5("A"~"G")	-	-	-	4.31	4.31 / A	4.31	4.56	3.18
	Erp ※6 Pdsign	kW	-	-	-	-	10.0	-	-	-
	Erp ※6 Tbivalen	°C	-	-	-	-	-10	-		
	Erp ※6 SCOP	(W/W)	-	-	-	-	4.2	-		
	Erp ※6 Annual consumption	kWh	-	-	-	-	3333	-		
	Erp ※6 Class		-	-	-	-	A+	-		
	POWER FACTOR	%	-	-	-	94	94	93	-	-
	NOISE INDOOR (H/M/L)	dB-A		44/38/32			-		/	/
		Power Level dB		62/55/49			-			
	NOISE OUTDOOR (H/L)	dB-A		-			52/-		/	/
		Power Level dB		-			69/-			
EXTRA LOW TEMP	Total CAPACITY(kW)/INPUT POWER(W)/COP					-				
MAX CURRENT(A)/MAX INPUT POWER(W)			0.73/95	0.71/95	0.71/95	9.00/5.550k	9.00/5.850k	9.00/6.100k	/	
STARTING CURRENT(A)/COMP OUTPUT(W)			-	-	-	4.05/3.0k	3.85/3.0k	3.75/3.0k	/	
NETWORK IMPEDANCE (ΩMAX.)				-			-			
FM OUTPUT (W)				90			90x2		/	
MOISTURE REMOVAL VOLUME		L/h(Pt/h)	6.0		(12.6)		-			
External static pressure		Pa		-						
I/D AIR FLOW	COOL	m^3/min (ft^3/min)		33/27/21 (1165/953/742)						
	HEAT	m^3/min (ft^3/min)		33/27/21 (1165/953/742)						
O/D AIR FLOW	COOL	m^3/min (ft^3/min)				110		(3885)		
	HEAT	m^3/min (ft^3/min)				95		(3355)		
REFRIGERANT TYPE, AMOUNT g(oz)						R410A	3.40k	(119.9)	/	
PROD IM	HEIGHT : H mm(inch)			319 (12-9/16)			1416 (55-3/4)		/	
	WIDTH : W mm(inch)			840 (33-3/32)			940 (37-1/32)		/	
	DEPTH : D mm(inch)			840 (33-3/32)			340 (13-13/32)		/	
PACK IM	HEIGHT : H mm			361			1556		/	
	WIDTH : W mm			929			1055		/	
	DEPTH : D mm			929			485		/	
MASS	(NET) kg(lb)			27 (60)			98 (216)		/	
	(GROSS) kg(lb)			34 (75)			108 (238)		/	
LAYERS LIMIT (actually)				11 (12)			1 (2)			
Operation Condition		Cool (DBT)		18°C ~ 32°C			-15°C ~ 46°C			
		Heat (DBT)		16°C ~ 30°C			-20°C ~ 24°C			
PIPING	PIPE DIAMETER mm (inch)		(Liquid)ø9.52(3/8) (Gas)ø15.88(5/8)			(Liquid)ø9.52(3/8) (Gas)ø15.88(5/8)				
	CONNECT METHOD, STD LENGTH m (ft)		flared type, 5.0(16.4)			flared type, 5.0(16.4)				
	PIPE LENGTH RANGE m (ft)		5 ~ 75 (16.4 ~ 246.1)						~	~
	I/D&O/D HEIGHT DIFFERENCE m (ft)		15 (OD located lower) / 30 (OD located higher) (49.2/98.4)							
	ADD GAS AMOUNT g/m (oz/ft)		50 (0.538)							
	PIPE LENGTH FOR ADDITIONAL GAS m (ft)		30 (98.4)							

*1: In case it is necessary to indicate the air □ow volume in (l/s), the value in (m^3/min.) shall be multiplied by 16.7 and rounded down the decimal point.
*2: If the EUROVENT Certi□ed models can be operated under the □extra-low□temperature condition, -7□C dry bulb and -8□C wet-bulb temperatures with rated voltage 230 V shall be used.
*3: Network Impedance shall be applicable for EUROPE and CHINA models.
*4: The annual consumption is calculated by multiplying the input power at 230 V (400 V) by an average of 500 hours per year in cooling mode.
*5: EER and COP classification is at 230 V (400 V) only in accordance with EU directive 2002/31/EC.
*6: SEER and SCOP classification is at 230V(400V) only in accordance with EN-14825. For heating, SCOP indicates the value of only Average heating season, Other fiche data indicates in an attached sheet.

Single-Type

1-1. Unit Speci□cations

PE1

1. 4-Way Cassette Type S-125PU1E5A / U-125PE1E8A

INDOOR		MODEL	S-125PU1E5A							
PANEL		MODEL	CZ-KPU21			-				
OUTDOOR		MODEL				U-125PE1E8A				
Branch pipe		MODEL	-							
PERFORMANCE TEST CONDITION			ISO5151 / EN14511 / EN12102							
POWER SUPPLY		ø, Hz	1ø 50Hz			3ø 50Hz				
		V	220	230	240	380	400	415	Min	Max
COOLING	CAPACITY	kW	12.5	12.5	12.5				3.3	14.0
		BTU/h	42700	42700	42700				11300	47800
	CURRENT	A	0.77	0.76	0.73	5.45	5.15	5.00	-	-
	INPUT POWER	W	100	100	100	3.370k	3.370k	3.370k	-	-
		TOTAL W		-		3.470k	3.470k	3.470k	840	4.600k
	ANNUAL CONSUMPTION	TOTAL kWh ※4		-		-	1735	-	-	-
	EER/EER CLASS	TOTAL(W/W)※5("A"~"G")	-	-	-	3.60	3.60 / A	3.60	3.93	3.04
	Erp ※6 Pdsign	kW	-	-	-	-	-	-		
	Erp ※6 SEER	(W/W)	-	-	-	-	-	-		
	Erp ※6 Annual consumption	kWh	-	-	-	-	-	-		
	Erp ※6 Class		-	-	-	-	-	-		
	POWER FACTOR	%	-	-	-	94	94	94	-	-
	NOISE INDOOR (H/M/L)	dB-A		45/39/33						
		Power Level dB		63/56/50						
	NOISE OUTDOOR (H/L)	dB-A					53/-			
		Power Level dB					70/-			
HEATING	CAPACITY	kW	14.0	14.0	14.0				4.1	16.0
		BTU/h	47800	47800	47800				14000	54600
	CURRENT	A	0.75	0.73	0.73	5.50	5.20	5.05	-	-
	INPUT POWER	W	100	100	100	3.400k	3.400k	3.400k	-	-
		TOTAL W		-		3.500k	3.500k	3.500k	900	5.200k
	COP/COP CLASS	TOTAL(W/W)※5("A"~"G")	-	-	-	4.00	4.00 / A	4.00	4.56	3.08
	Erp ※6 Pdsign	kW	-	-	-	-	-	-		
	Erp ※6 Tbivalen	°C	-	-	-	-	-	-		
	Erp ※6 SCOP	(W/W)	-	-	-	-	-	-		
	Erp ※6 Annual consumption	kWh	-	-	-	-	-	-		
	Erp ※6 Class		-	-	-	-	-	-		
	POWER FACTOR	%	-	-	-	94	94	94	-	-
	NOISE INDOOR (H/M/L)	dB-A		45/39/33			-		/	/
		Power Level dB		63/56/50			-			
	NOISE OUTDOOR (H/L)	dB-A		-			53/-		/	/
		Power Level dB		-			70/-			
EXTRA LOW TEMP	Total CAPACITY(kW)/INPUT POWER(W)/COP					-				
MAX CURRENT(A)/MAX INPUT POWER(W)			0.77/100	0.76/100	0.73/100	10.0/6.200k	10.0/6.500k	10.0/6.750k	/	
STARTING CURRENT(A)/COMP OUTPUT(W)			-	-	-	5.50/3.0k	5.20/3.0k	5.05/3.0k	/	
NETWORK IMPEDANCE (ΩMAX.)				-			-			
FM OUTPUT (W)				90			90x2		/	
MOISTURE REMOVAL VOLUME		L/h(Pt/h)	7.9		(16.6)		-			
External static pressure		Pa		-						
I/D AIR FLOW	COOL	m^3/min (ft^3/min)		35/28/22 (1236/989/777)						
	HEAT	m^3/min (ft^3/min)		35/28/22 (1236/989/777)						
O/D AIR FLOW	COOL	m^3/min (ft^3/min)				130		(4591)		
	HEAT	m^3/min (ft^3/min)				110		(3885)		
REFRIGERANT TYPE, AMOUNT g(oz)						R410A	3.40k	(119.9)	/	
PROD	HEIGHT : H mm(inch)			319 (12-9/16)			1416 (55-3/4)		/	
	WIDTH : W mm(inch)			840 (33-3/32)			940 (37-1/32)		/	
	DEPTH : D mm(inch)			840 (33-3/32)			340 (13-13/32)		/	
PACK	HEIGHT : H mm			361			1556		/	
	WIDTH : W mm			929			1055		/	
	DEPTH : D mm			929			485		/	
MASS	(NET) kg(lb)			27 (60)			98 (216)		/	
	(GROSS) kg(lb)			34 (75)			108 (238)		/	
LAYERS LIMIT (actually)				11 (12)			1 (2)			
Operation Condition		Cool (DBT)		18°C ~ 32°C			-15°C ~ 46°C			
		Heat (DBT)		16°C ~ 30°C			-20°C ~ 24°C			
PIPING	PIPE DIAMETER mm (inch)		(Liquid)ø9.52(3/8) (Gas)ø15.88(5/8)			(Liquid)ø9.52(3/8) (Gas)ø15.88(5/8)				
	CONNECT METHOD, STD LENGTH m (ft)		flared type, 5.0(16.4)			flared type, 5.0(16.4)				
	PIPE LENGTH RANGE m (ft)		5 ~ 75 (16.4 ~ 246.1)						~	~
	I/D&O/D HEIGHT DIFFERENCE m (ft)		15(OD located lower) /3 0 (OD located higher) (49.2/98.4)							
	ADD GAS AMOUNT g/m (oz/ft)		50 (0.538)							
	PIPE LENGTH FOR ADDITIONAL GAS m (ft)		30 (98.4)							

*1: In case it is necessary to indicate the air □ow volume in (l/s), the value in (m^3/min.) shall be multiplied by 16.7 and rounded down the decimal point.
*2: If the EUROVENT Certi□ed models can be operated under the □extra-low□temperature condition, -7□C dry bulb and -8□C wet-bulb temperatures with rated voltage 230 V shall be used.
*3: Network Impedance shall be applicable for EUROPE and CHINA models.
*4: The annual consumption is calculated by multiplying the input power at 230 V (400 V) by an average of 500 hours per year in cooling mode.
*5: EER and COP classification is at 230 V (400 V) only in accordance with EU directive 2002/31/EC.
*6: SEER and SCOP classification is at 230V(400V) only in accordance with EN-14825. For heating, SCOP indicates the value of only Average heating season, Other fiche data indicates in an attached sheet.

Single-Type

1-1. Unit Speci□cations

PE1

1. 4-Way Cassette Type S-140PU1E5A / U-140PE1E8A

INDOOR		MODEL	S-140PU1E5A							
PANEL		MODEL	CZ-KPU21			-				
OUTDOOR		MODEL				U-140PE1E8A				
Branch pipe		MODEL	-							
PERFORMANCE TEST CONDITION			ISO5151 / EN14511 / EN12102							
POWER SUPPLY		ø, Hz	1ø 50Hz			3ø 50Hz				
		V	220	230	240	380	400	415	Min	Max
COOLING	CAPACITY	kW	14.0	14.0	14.0				3.3	15.5
		BTU/h	47800	47800	47800				11300	52900
	CURRENT	A	0.90	0.89	0.87	6.75	6.45	6.20	-	-
	INPUT POWER	W	115	115	115	4.195k	4.195k	4.195k	-	-
		TOTAL W		-		4.310k	4.310k	4.310k	840	6.000k
	ANNUAL CONSUMPTION	TOTAL kWh ※4		-		-	2155	-	-	-
	EER/EER CLASS	TOTAL(W/W) ※5/("A"~"G")	-	-	-	3.25	3.25 / A	3.25	3.93	2.58
	Erp ※6 Pdsign	kW	-	-	-	-	-	-		
	Erp ※6 SEER	(W/W)	-	-	-	-	-	-		
	Erp ※6 Annual consumption	kWh	-	-	-	-	-	-		
	Erp ※6 Class		-	-	-	-	-	-		
	POWER FACTOR	%	-	-	-	94	94	94	-	-
	NOISE INDOOR (H/M/L)	dB-A		46/40/34						
		Power Level dB		64/57/51						
	NOISE OUTDOOR (H/L)	dB-A					54/-			
		Power Level dB					71/-			
HEATING	CAPACITY	kW	16.0	16.0	16.0				4.1	18.0
		BTU/h	54600	54600	54600				14000	61400
	CURRENT	A	0.83	0.80	0.79	6.85	6.50	6.25	-	-
	INPUT POWER	W	105	105	105	4.225k	4.225k	4.225k	-	-
		TOTAL W		-		4.330k	4.330k	4.330k	900	5.900k
	COP/COP CLASS	TOTAL(W/W) ※5/("A"~"G")	-	-	-	3.70	3.70 / A	3.70	4.56	3.05
	Erp ※6 Pdsign	kW	-	-	-	-	-	-	-	-
	Erp ※6 Tbivalen	°C	-	-	-	-	-	-		
	Erp ※6 SCOP	(W/W)	-	-	-	-	-	-		
	Erp ※6 Annual consumption	kWh	-	-	-	-	-	-		
	Erp ※6 Class		-	-	-	-	-	-		
	POWER FACTOR	%	-	-	-	94	94	94	-	-
	NOISE INDOOR (H/M/L)	dB-A		46/40/34			-		/	/
		Power Level dB		64/57/51			-			
	NOISE OUTDOOR (H/L)	dB-A		-			55/-		/	/
		Power Level dB		-			71/-			
EXTRA LOW TEMP	Total CAPACITY(kW)/INPUT POWER(W)/COP					-				
MAX CURRENT(A)/MAX INPUT POWER(W)			0.90/115	0.89/115	0.87/115	11.0/6.800k	11.0/7.150k	11.0/7.450k	/	
STARTING CURRENT(A)/COMP OUTPUT(W)			-	-	-	6.85/3.0k	6.50/3.0k	6.25/3.0k	/	
NETWORK IMPEDANCE (ΩMAX.)				-			-			
FM OUTPUT (W)				90			90x2		/	
MOISTURE REMOVAL VOLUME		L/h(Pt/h)	9.0		(18.9)		-			
External static pressure		Pa		-						
I/D AIR FLOW	COOL	m^3/min (ft^3/min)		36/29/23 (1271/1024/812)						
	HEAT	m^3/min (ft^3/min)		36/29/23 (1271/1024/812)						
O/D AIR FLOW	COOL	m^3/min (ft^3/min)				135		(4767)		
	HEAT	m^3/min (ft^3/min)				120		(4238)		
REFRIGERANT TYPE, AMOUNT g(oz)						R410A	3.40k	(119.9)	/	
PROD	HEIGHT : H mm(inch)			319 (12-9/16)			1416 (55-3/4)		/	
	WIDTH : W mm(inch)			840 (33-3/32)			940 (37-1/32)		/	
	DEPTH : D mm(inch)			840 (33-3/32)			340 (13-13/32)		/	
PACK	HEIGHT : H mm			361			1556		/	
	WIDTH : W mm			929			1055		/	
	DEPTH : D mm			929			485		/	
MASS	(NET) kg(lb)			27 (60)			98 (216)		/	
	(GROSS) kg(lb)			34 (75)			108 (238)		/	
LAYERS LIMIT (actually)				11 (12)			1 (2)			
Operation Condition		Cool (DBT)		18°C ~ 32°C			-15°C ~ 46°C			
		Heat (DBT)		16°C ~ 30°C			-20°C ~ 24°C			
PIPING	PIPE DIAMETER mm (inch)		(Liquid)ø9.52(3/8) (Gas)ø15.88(5/8)			(Liquid)ø9.52(3/8) (Gas)ø15.88(5/8)				
	CONNECT METHOD, STD LENGTH m (ft)		flared type, 5.0(16.4)			flared type, 5.0(16.4)				
	PIPE LENGTH RANGE m (ft)		5 ~ 75 (16.4 ~ 246.1)						~	~
	I/D&O/D HEIGHT DIFFERENCE m (ft)		15 (OD located lower) / 30 (OD located higher) (49.2/98.4)							
	ADD GAS AMOUNT g/m (oz/ft)		50 (0.538)							
	PIPE LENGTH FOR ADDITIONAL GAS m (ft)		30 (98.4)							

*1: In case it is necessary to indicate the air □ow volume in (l/s), the value in (m^3/min.) shall be multiplied by 16.7 and rounded down the decimal point.
*2: If the EUROVENT Certi□ed models can be operated under the □extra-low□temperature condition, -7□C dry bulb and -8□C wet-bulb temperatures with rated voltage 230 V shall be used.
*3: Network Impedance shall be applicable for EUROPE and CHINA models.
*4: The annual consumption is calculated by multiplying the input power at 230 V (400 V) by an average of 500 hours per year in cooling mode.
*5: EER and COP classification is at 230 V (400 V) only in accordance with EU directive 2002/31/EC.
*6: SEER and SCOP classification is at 230V(400V) only in accordance with EN-14825. For heating, SCOP indicates the value of only Average heating season, Other fiche data indicates in an attached sheet.

Simultaneous (Twin) -Type

1-1. Unit Speci□cations

PE1

2. Ceiling Type S-36PT2E5A×2 / U-71PE1E5A

INDOOR		MODEL	S-36PT2E5A×2							
PANEL		MODEL	-			-				
OUTDOOR		MODEL				U-71PE1E5A				
Branch pipe		MODEL	CZ-P155BK1							
PERFORMANCE TEST CONDITION			ISO5151 / EN14511 / EN14825 / EN12102							
POWER SUPPLY		ø, Hz	1ø 50Hz			1ø 50Hz				
		V	220	230	240	220	230	240	Min	Max
COOLING	CAPACITY	kW	7.1	7.1	7.1				2.5	8.0
		BTU/h	24200	24200	24200				8500	27300
	CURRENT	A	0.37×2	0.36×2	0.35×2	9.00	8.70	8.40	-	-
	INPUT POWER	W	35×2	35×2	35×2	1.875k	1.875k	1.875k	-	-
		TOTAL W		-		1.945k	1.945k	1.945k	450	2.780k
	ANNUAL CONSUMPTION	TOTAL kWh ※4		-		-	973	-	-	-
	EER/EER CLASS	TOTAL(W/W)※5("A"~"G")	-	-	-	3.65	3.65 / A	3.65	5.56	2.88
	Erp ※6 Pdsign	kW	-	-	-	-	7.1	-		
	Erp ※6 SEER	(W/W)	-	-	-	-	6.2	-		
	Erp ※6 Annual consumption	kWh	-	-	-	-	401	-		
	Erp ※6 Class		-	-	-	-	A++	-		
	POWER FACTOR	%	-	-	-	95	94	93	-	-
	NOISE INDOOR (H/M/L)	dB-A		36/32/29						
		Power Level dB		54/50/47						
	NOISE OUTDOOR (H/L)	dB-A					48/-			
		Power Level dB					65/-			
HEATING	CAPACITY	kW	8.0	8.0	8.0				2.0	9.0
		BTU/h	27300	27300	27300				6800	30700
	CURRENT	A	0.37×2	0.36×2	0.36×2	8.90	8.60	8.30	-	-
	INPUT POWER	W	35×2	35×2	35×2	1.875k	1.875k	1.875k	-	-
		TOTAL W		-		1.945k	1.945k	1.945k	400	2.900k
	COP/COP CLASS	TOTAL(W/W)※5("A"~"G")	-	-	-	4.11	4.11 / A	4.11	5.00	3.10
	Erp ※6 Pdsign	kW	-	-	-	-	7.1	-		
	Erp ※6 Tbivalen	°C	-	-	-	-	-9	-		
	Erp ※6 SCOP	(W/W)	-	-	-	-	4.0	-		
	Erp ※6 Annual consumption	kWh	-	-	-	-	2485	-		
	Erp ※6 Class		-	-	-	-	A+	-		
	POWER FACTOR	%	-	-	-	96	95	94	-	-
	NOISE INDOOR (H/M/L)	dB-A		36/32/29			-		/	/
		Power Level dB		54/50/47			-			
	NOISE OUTDOOR (H/L)	dB-A		-			50/-		/	/
		Power Level dB		-			67/-			
EXTRA LOW TEMP	Total CAPACITY(kW)/INPUT POWER(W)/COP				-					
MAX CURRENT(A)/MAX INPUT POWER(W)			0.37×2/35×2	0.36×2/35×2	0.35×2/35×2	18.0/3.76k	18.0/3.89k	18.0/4.02k	/	
STARTING CURRENT(A)/COMP OUTPUT(W)			-	-	-	9.00/2.0k	8.70/2.0k	8.40/2.0k	/	
NETWORK IMPEDANCE (ΩMAX.)				-			-			
FM OUTPUT (W)				43			90		/	
MOISTURE REMOVAL VOLUME		L/h(Pt/h)	4.2	(2.1×2)	(8.8)		-			
External static pressure		Pa		-						
I/D AIR FLOW	COOL	m^3/min (ft^3/min)		[14/12/10.5 (494/424/371)]×2						
	HEAT	m^3/min (ft^3/min)		[14/12/10.5 (494/424/371)]×2						
O/D AIR FLOW	COOL	m^3/min (ft^3/min)				60		(2119)		
	HEAT	m^3/min (ft^3/min)				60		(2119)		
REFRIGERANT TYPE, AMOUNT g(oz)						R410A	2.35k	(82.9)	/	
PROD IM	HEIGHT : H mm(inch)			235 (9-1/4)			996 (39-7/32)		/	
	WIDTH : W mm(inch)			960 (37-25/32)			940 (37-1/32)		/	
	DEPTH : D mm(inch)			690 (27-5/32)			340 (13-13/32)		/	
PAC DIM	HEIGHT : H mm			360			1136		/	
	WIDTH : W mm			1025			1055		/	
	DEPTH : D mm			820			485		/	
MASS	(NET) kg(lb)			27 (60)			69 (152)		/	
	(GROSS) kg(lb)			34 (75)			77 (170)		/	
LAYERS LIMIT (actually)				9 (10)			2 (3)			
Operation Condition		Cool O.D(DBT)		18°C ~ 32°C			-15°C ~ 46°C			
		Heat O.D(DBT)		16°C ~ 30°C			-20°C ~ 24°C			
PIPING	PIPE DIAMETER mm (inch)		(Liquid)ø6.35(1/4) (Gas)ø12.7(1/2)			(Liquid)ø9.52(3/8) (Gas)ø15.88(5/8)				
	CONNECT METHOD, STD LENGTH m (ft)		flared type, 5.0(16.4)			flared type, 5.0(16.4)				
	PIPE LENGTH RANGE m (ft)			5 ~ 50 (16.4 ~ 164)					~	~
	I/D&O/D HEIGHT DIFFERENCE m (ft)		15 (OD located lower) / 30 (OD located higher) (49.2/98.4)							
	ADD GAS AMOUNT g/m (oz/ft)			50 (0.538)						
	PIPE LENGTH FOR ADDITIONAL GAS m (ft)			30 (98.4)						

*1: In case it is necessary to indicate the air □ow volume in (l/s), the value in (m^3/min.) shall be multiplied by 16.7 and rounded down the decimal point.
*2: If the EUROVENT Certi□ed models can be operated under the □extra-low□temperature condition, -7□C dry bulb and -8□C wet-bulb temperatures with rated voltage 230 V shall be used.
*3: Network Impedance shall be applicable for EUROPE and CHINA models.
*4: The annual consumption is calculated by multiplying the input power at 230 V (400 V) by an average of 500 hours per year in cooling mode.
*5: EER and COP classification is at 230 V (400 V) only in accordance with EU directive 2002/31/EC.
*6: SEER and SCOP classification is at 230V(400V) only in accordance with EN-14825. For heating, SCOP indicates the value of only Average heating season, Other fiche data indicates in an attached sheet.

Simultaneous (Triple) -Type

1-1. Unit Speci□cations

PE1

2. Ceiling Type S-36PT2E5A×3 / U-100PE1E5A

INDOOR		MODEL	S-36PT2E5A×3							
PANEL		MODEL	-			-				
OUTDOOR		MODEL				U-100PE1E5A				
Branch pipe		MODEL	CZ-P3HPC2BM							
PERFORMANCE TEST CONDITION			ISO5151 / EN14511 / EN14825 / EN12102							
POWER SUPPLY		ø, Hz	1ø 50Hz			1ø 50Hz				
		V	220	230	240	220	230	240	Min	Max
COOLING	CAPACITY	kW	10.0	10.0	10.0				3.3	15.5
		BTU/h	34100	34100	34100				11300	42700
	CURRENT	A	0.37×3	0.36×3	0.35×3	11.5	11.1	10.6	-	-
	INPUT POWER	W	35×3	35×3	35×3	2.450k	2.450k	2.450k	-	-
		TOTAL W		-		2.555k	2.555k	2.555k	840	3.850k
	ANNUAL CONSUMPTION	TOTAL kWh ※4		-		-	1278	-	-	-
	EER/EER CLASS	TOTAL(W/W)※5/("A"~"G")	-	-	-	3.91	3.91 / A	3.91	3.93	3.25
	Erp ※6 Pdsign	kW	-	-	-	-	10.0	-		
	Erp ※6 SEER	(W/W)	-	-	-	-	6.5	-		
	Erp ※6 Annual consumption	kWh	-	-	-	-	539	-		
	Erp ※6 Class		-	-	-	-	A++	-		
	POWER FACTOR	%	-	-	-	97	96	96	-	-
	NOISE INDOOR (H/M/L)	dB-A		36/32/29						
		Power Level dB		54/50/47						
	NOISE OUTDOOR (H/L)	dB-A					52/-			
		Power Level dB					69/-			
HEATING	CAPACITY	kW	11.2	11.2	11.2				4.1	14.0
		BTU/h	38200	38200	38200				14000	47800
	CURRENT	A	0.37×3	0.36×3	0.35×3	11.8	11.4	11.0	-	-
	INPUT POWER	W	35×3	35×3	35×3	2.520k	2.520k	2.520k	-	-
		TOTAL W		-		2.625k	2.625k	2.625k	900	4.400k
	COP/COP CLASS	TOTAL(W/W)※5/("A"~"G")	-	-	-	4.27	4.27 / A	4.27	4.56	3.18
	Erp ※6 Pdsign	kW	-	-	-	-	10.0	-		
	Erp ※6 Tbivalen	°C	-	-	-	-	-10	-		
	Erp ※6 SCOP	(W/W)	-	-	-	-	4.3	-		
	Erp ※6 Annual consumption	kWh	-	-	-	-	3256	-		
	Erp ※6 Class		-	-	-	-	A+	-		
	POWER FACTOR	%	-	-	-	97	96	95	-	-
	NOISE INDOOR (H/M/L)	dB-A		36/32/29			-		/	/
		Power Level dB		54/50/47			-			
	NOISE OUTDOOR (H/L)	dB-A		-			52/-		/	/
		Power Level dB		-			69/-			
EXTRA LOW TEMP	Total CAPACITY(kW)/INPUT POWER(W)/COP					-				
MAX CURRENT(A)/MAX INPUT POWER(W)			0.37×3/35×3	0.36×3/35×3	0.35×3/35×3	25.0/5.34k	25.0/5.52k	25.0/5.70k	/	
STARTING CURRENT(A)/COMP OUTPUT(W)			-	-	-	11.8/3.0k	11.4/3.0k	11.0/3.0k	/	
NETWORK IMPEDANCE (ΩMAX.)				-			-			
FM OUTPUT (W)				43			90×2		/	
MOISTURE REMOVAL VOLUME		L/h(Pt/h)	6.0	(2.0×3)	(12.6)		-			
External static pressure		Pa		-						
I/D AIR FLOW	COOL	m^3/min (ft^3/min)		[14/12/10.5 (494/424/371)]×3						
	HEAT	m^3/min (ft^3/min)		[14/12/10.5 (494/424/371)]×3						
O/D AIR FLOW	COOL	m^3/min (ft^3/min)				110		(3885)		
	HEAT	m^3/min (ft^3/min)				95		(3355)		
REFRIGERANT TYPE, AMOUNT g(oz)						R410A	3.40k	(119.9)	/	
PROD IM	HEIGHT : H mm(inch)			235 (9-1/4)			1416 (55-3/4)		/	
	WIDTH : W mm(inch)			960 (37-25/32)			940 (37-1/32)		/	
	DEPTH : D mm(inch)			690 (27-5/32)			340 (13-13/32)		/	
PACK IM	HEIGHT : H mm			360			1556		/	
	WIDTH : W mm			1025			1055		/	
	DEPTH : D mm			820			485		/	
MASS	(NET) kg(lb)			27 (60)			98 (216)		/	
	(GROSS) kg(lb)			34 (75)			108 (238)		/	
LAYERS LIMIT (actually)				9 (10)			1 (2)			
Operation Condition		Cool O.D(DBT)		18°C ~ 32°C			-15°C ~ 46°C			
		Heat O.D(DBT)		16°C ~ 30°C			-20°C ~ 24°C			
PIPING	PIPE DIAMETER mm (inch)		(Liquid)ø6.35(1/4) (Gas)ø12.7(1/2)			(Liquid)ø9.52(3/8) (Gas)ø15.88(5/8)				
	CONNECT METHOD, STD LENGTH m (ft)		flared type, 5.0(16.4)			flared type, 5.0(16.4)				
	PIPE LENGTH RANGE m (ft)			5 ~ 75 (16.4 ~ 246.1)					~	~
	I/D&O/D HEIGHT DIFFERENCE m (ft)		15 (OD located lower) / 30 (OD located higher) (49.2/98.4)							
	ADD GAS AMOUNT g/m (oz/ft)			50 (0.538)						
	PIPE LENGTH FOR ADDITIONAL GAS m (ft)			20 (65.6)						

*1: In case it is necessary to indicate the air □ow volume in (l/s), the value in (m^3/min.) shall be multiplied by 16.7 and rounded down the decimal point.
*2: If the EUROVENT Certi□ed models can be operated under the □extra-low□temperature condition, -7□C dry bulb and -8□C wet-bulb temperatures with rated voltage 230 V shall be used.
*3: Network Impedance shall be applicable for EUROPE and CHINA models.
*4: The annual consumption is calculated by multiplying the input power at 230 V (400 V) by an average of 500 hours per year in cooling mode.
*5: EER and COP classification is at 230 V (400 V) only in accordance with EU directive 2002/31/EC.
*6: SEER and SCOP classification is at 230V(400V) only in accordance with EN-14825. For heating, SCOP indicates the value of only Average heating season, Other fiche data indicates in an attached sheet.

Simultaneous (Double-Twin) -Type

1-1. Unit Speci□cations

PE1

2. Ceiling Type S-36PT2E5A×4 / U-125PE1E5A

INDOOR		MODEL	S-36PT2E5A×4							
PANEL		MODEL	-			-				
OUTDOOR		MODEL				U-125PE1E5A				
Branch pipe		MODEL	CZ-P155BK1							
PERFORMANCE TEST CONDITION			ISO5151 / EN14511 / EN12102							
POWER SUPPLY		ø, Hz	1ø 50Hz			1ø 50Hz				
		V	220	230	240	220	230	240	Min	Max
COOLING	CAPACITY	kW	12.5	12.5	12.5				3.3	14.0
		BTU/h	42700	42700	42700				11300	47800
	CURRENT	A	0.37×4	0.36×4	0.35×4	17.0	16.4	15.8	-	-
	INPUT POWER	W	35×4	35×4	35×4	3.620k	3.620k	3.620k	-	-
		TOTAL W		-		3.760k	3.760k	3.760k	840	4.860k
	ANNUAL CONSUMPTION	TOTAL kWh ※4		-		-	1880	-	-	-
	EER/EER CLASS	TOTAL(W/W)※5("A"~"G")	-	-	-	3.32	3.32 / A	3.32	3.93	2.88
	Erp ※6 Pdsign	kW	-	-	-	-	-	-		
	Erp ※6 SEER	(W/W)	-	-	-	-	-	-		
	Erp ※6 Annual consumption	kWh	-	-	-	-	-	-		
	Erp ※6 Class		-	-	-	-	-	-		
	POWER FACTOR	%	-	-	-	97	96	95	-	-
	NOISE INDOOR (H/M/L)	dB-A		36/32/29						
		Power Level dB		54/50/47						
	NOISE OUTDOOR (H/L)	dB-A					53/-			
		Power Level dB					70/-			
HEATING	CAPACITY	kW	14.0	14.0	14.0				4.1	16.0
		BTU/h	47800	47800	47800				14000	54600
	CURRENT	A	0.37×4	0.36×4	0.35×4	16.0	15.4	14.9	-	-
	INPUT POWER	W	35×4	35×4	35×4	3.400k	3.400k	3.400k	-	-
		TOTAL W		-		3.540k	3.540k	3.540k	900	5.210k
	COP/COP CLASS	TOTAL(W/W)※5("A"~"G")	-	-	-	3.95	3.95 / A	3.95	4.56	3.07
	Erp ※6 Pdsign	kW	-	-	-	-	-	-		
	Erp ※6 Tbivalen	°C	-	-	-	-	-	-		
	Erp ※6 SCOP	(W/W)	-	-	-	-	-	-		
	Erp ※6 Annual consumption	kWh	-	-	-	-	-	-		
	Erp ※6 Class		-	-	-	-	-	-		
	POWER FACTOR	%	-	-	-	97	96	95	-	-
	NOISE INDOOR (H/M/L)	dB-A		36/32/29			-		/	/
		Power Level dB		54/50/47			-			
	NOISE OUTDOOR (H/L)	dB-A		-			53/-		/	/
		Power Level dB		-			70/-			
EXTRA LOW TEMP	Total CAPACITY(kW)/INPUT POWER(W)/COP					-				
MAX CURRENT(A)/MAX INPUT POWER(W)			0.37×4/35×4	0.36×4/35×4	0.35×4/35×4	28.0/5.98k	28.0/6.18k	28.0/6.38k	/	
STARTING CURRENT(A)/COMP OUTPUT(W)			-	-	-	17.0/3.0k	16.4/3.0k	15.8/3.0k	/	
NETWORK IMPEDANCE (ΩMAX.)				-			-			
FM OUTPUT (W)				43			90×2		/	
MOISTURE REMOVAL VOLUME		L/h(Pt/h)	7.9	(1.975×4)	(16.6)		-			
External static pressure		Pa		-						
I/D AIR FLOW	COOL	m^3/min (ft^3/min)		[14/12/10.5 (494/424/371)]×4						
	HEAT	m^3/min (ft^3/min)		[14/12/10.5 (494/424/371)]×4						
O/D AIR FLOW	COOL	m^3/min (ft^3/min)				130		(4591)		
	HEAT	m^3/min (ft^3/min)				110		(3885)		
REFRIGERANT TYPE, AMOUNT g(oz)						R410A	3.40k	(119.9)	/	
PROD IM	HEIGHT : H mm(inch)			235 (9-1/4)			1416 (55-3/4)		/	
	WIDTH : W mm(inch)			960 (37-25/32)			940 (37-1/32)		/	
	DEPTH : D mm(inch)			690 (27-5/32)			340 (13-13/32)		/	
PAC D IM	HEIGHT : H mm			360			1556		/	
	WIDTH : W mm			1025			1055		/	
	DEPTH : D mm			820			485		/	
MASS	(NET) kg(lb)			27 (60)			98 (216)		/	
	(GROSS) kg(lb)			34 (75)			108 (238)		/	
LAYERS LIMIT (actually)				9 (10)			1 (2)			
Operation Condition		Cool O.D(DBT)		18°C ~ 32°C			-15°C ~ 46°C			
		Heat O.D(DBT)		16°C ~ 30°C			-20°C ~ 24°C			
PIPING	PIPE DIAMETER mm (inch)		(Liquid)ø6.35(1/4) (Gas)ø12.7(1/2)			(Liquid)ø9.52(3/8) (Gas)ø15.88(5/8)				
	CONNECT METHOD, STD LENGTH m (ft)		flared type, 5.0(16.4)			flared type, 5.0(16.4)				
	PIPE LENGTH RANGE m (ft)			5 ~ 75 (16.4 ~ 246.1)					~	~
	I/D&O/D HEIGHT DIFFERENCE m (ft)		15 (OD located lower) / 30 (OD located higher) (49.2/98.4)							
	ADD GAS AMOUNT g/m (oz/ft)			50 (0.538)						
	PIPE LENGTH FOR ADDITIONAL GAS m (ft)			20 (65.6)						

*1: In case it is necessary to indicate the air □ow volume in (l/s), the value in (m^3/min.) shall be multiplied by 16.7 and rounded down the decimal point.
*2: If the EUROVENT Certi□ed models can be operated under the □extra-low□temperature condition, -7□C dry bulb and -8□C wet-bulb temperatures with rated voltage 230 V shall be used.
*3: Network Impedance shall be applicable for EUROPE and CHINA models.
*4: The annual consumption is calculated by multiplying the input power at 230 V (400 V) by an average of 500 hours per year in cooling mode.
*5: EER and COP classification is at 230 V (400 V) only in accordance with EU directive 2002/31/EC.
*6: SEER and SCOP classification is at 230V(400V) only in accordance with EN-14825. For heating, SCOP indicates the value of only Average heating season, Other fiche data indicates in an attached sheet.

Simultaneous (Triple) -Type

1-1. Unit Speci□cations

PE1

2. Ceiling Type S-45PT2E5A×3 / U-125PE1E5A

INDOOR		MODEL	S-45PT2E5A×3							
PANEL		MODEL	-			-				
OUTDOOR		MODEL				U-125PE1E5A				
Branch pipe		MODEL	CZ-P3HPC2BM							
PERFORMANCE TEST CONDITION			ISO5151 / EN14511 / EN12102							
POWER SUPPLY		ø, Hz	1ø 50Hz			1ø 50Hz				
		V	220	230	240	220	230	240	Min	Max
COOLING	CAPACITY	kW	12.5	12.5	12.5				3.3	14.0
		BTU/h	42700	42700	42700				11300	47800
	CURRENT	A	0.39×3	0.38×3	0.37×3	17.0	16.4	15.8	-	-
	INPUT POWER	W	40×3	40×3	40×3	3.620k	3.620k	3.620k	-	-
		TOTAL W		-		3.740k	3.740k	3.740k	840	4.860k
	ANNUAL CONSUMPTION	TOTAL kWh ※4		-		-	1870	-	-	-
	EER/EER CLASS	TOTAL(W/W)※5("A"~"G")	-	-	-	3.34	3.34 / A	3.34	3.93	2.88
	Erp ※6 Pdsign	kW	-	-	-	-	-	-		
	Erp ※6 SEER	(W/W)	-	-	-	-	-	-		
	Erp ※6 Annual consumption	kWh	-	-	-	-	-	-		
	Erp ※6 Class		-	-	-	-	-	-		
	POWER FACTOR	%	-	-	-	97	96	95	-	-
	NOISE INDOOR (H/M/L)	dB-A		37/33/29						
		Power Level dB		55/51/47						
	NOISE OUTDOOR (H/L)	dB-A					53/-			
		Power Level dB					70/-			
HEATING	CAPACITY	kW	14.0	14.0	14.0				4.1	16.0
		BTU/h	47800	47800	47800				14000	54600
	CURRENT	A	0.39×3	0.38×3	0.37×3	16.0	15.4	14.9	-	-
	INPUT POWER	W	40×3	40×3	40×3	3.400k	3.400k	3.400k	-	-
		TOTAL W		-		3.520k	3.520k	3.520k	900	5.210k
	COP/COP CLASS	TOTAL(W/W)※5("A"~"G")	-	-	-	3.98	3.98 / A	3.98	4.56	3.07
	Erp ※6 Pdsign	kW	-	-	-	-	-	-		
	Erp ※6 Tbivalen	°C	-	-	-	-	-	-		
	Erp ※6 SCOP	(W/W)	-	-	-	-	-	-		
	Erp ※6 Annual consumption	kWh	-	-	-	-	-	-		
	Erp ※6 Class		-	-	-	-	-	-		
	POWER FACTOR	%	-	-	-	97	96	95	-	-
	NOISE INDOOR (H/M/L)	dB-A		37/33/29			-		/	/
		Power Level dB		55/51/47			-			
	NOISE OUTDOOR (H/L)	dB-A		-			53/-		/	/
		Power Level dB		-			70/-			
EXTRA LOW TEMP	Total CAPACITY(kW)/INPUT POWER(W)/COP					-				
MAX CURRENT(A)/MAX INPUT POWER(W)			0.39×3/40×3	0.38×3/40×3	0.37×3/40×3	28.0/5.98k	28.0/6.18k	28.0/6.38k	/	
STARTING CURRENT(A)/COMP OUTPUT(W)			-	-	-	17.0/3.0k	16.4/3.0k	15.8/3.0k	/	
NETWORK IMPEDANCE (ΩMAX.)				-			-			
FM OUTPUT (W)				43			90×2		/	
MOISTURE REMOVAL VOLUME		L/h(Pt/h)	7.9	(2.63×3)	(16.6)		-			
External static pressure		Pa		-						
I/D AIR FLOW	COOL	m^3/min (ft^3/min)		[15/12.5/10.5 (530/441/371)]×3						
	HEAT	m^3/min (ft^3/min)		[15/12.5/10.5 (530/441/371)]×3						
O/D AIR FLOW	COOL	m^3/min (ft^3/min)				130		(4591)		
	HEAT	m^3/min (ft^3/min)				110		(3885)		
REFRIGERANT TYPE, AMOUNT g(oz)						R410A	3.40k	(119.9)	/	
PROD	HEIGHT : H mm(inch)			235 (9-1/4)			1416 (55-3/4)		/	
	WIDTH : W mm(inch)			960 (37-25/32)			940 (37-1/32)		/	
	DEPTH : D mm(inch)			690 (27-5/32)			340 (13-13/32)		/	
PACK	HEIGHT : H mm			360			1556		/	
	WIDTH : W mm			1025			1055		/	
	DEPTH : D mm			820			485		/	
MASS	(NET) kg(lb)			27 (60)			98 (216)		/	
	(GROSS) kg(lb)			34 (75)			108 (238)		/	
LAYERS LIMIT (actually)				9 (10)			1 (2)			
Operation Condition		Cool O.D(DBT)		18°C ~ 32°C			-15°C ~ 46°C			
		Heat O.D(DBT)		16°C ~ 30°C			-20°C ~ 24°C			
PIPING	PIPE DIAMETER mm (inch)		(Liquid)ø6.35(1/4) (Gas)ø12.7(1/2)			(Liquid)ø9.52(3/8) (Gas)ø15.88(5/8)				
	CONNECT METHOD, STD LENGTH m (ft)		flared type, 5.0(16.4)			flared type, 5.0(16.4)				
	PIPE LENGTH RANGE m (ft)			5 ~ 75 (16.4 ~ 246.1)					~	~
	I/D&O/D HEIGHT DIFFERENCE m (ft)		15 (OD located lower) / 30 (OD located higher) (49.2/98.4)							
	ADD GAS AMOUNT g/m (oz/ft)			50 (0.538)						
	PIPE LENGTH FOR ADDITIONAL GAS m (ft)			20 (65.6)						

*1: In case it is necessary to indicate the air □ow volume in (l/s), the value in (m^3/min.) shall be multiplied by 16.7 and rounded down the decimal point.
*2: If the EUROVENT Certi□ed models can be operated under the □extra-low□temperature condition, -7□C dry bulb and -8□C wet-bulb temperatures with rated voltage 230 V shall be used.
*3: Network Impedance shall be applicable for EUROPE and CHINA models.
*4: The annual consumption is calculated by multiplying the input power at 230 V (400 V) by an average of 500 hours per year in cooling mode.
*5: EER and COP classification is at 230 V (400 V) only in accordance with EU directive 2002/31/EC.
*6: SEER and SCOP classification is at 230V(400V) only in accordance with EN-14825. For heating, SCOP indicates the value of only Average heating season, Other fiche data indicates in an attached sheet.

Single -Type

1-1. Unit Speci□cations

PE1

2. Ceiling Type S-50PT2E5A / U-50PE1E5

INDOOR		MODEL	S-50PT2E5A							
PANEL		MODEL	-			-				
OUTDOOR		MODEL				U-50PE1E5				
Branch pipe		MODEL	-							
PERFORMANCE TEST CONDITION			ISO5151 / EN14511 / EN14825 / EN12102							
POWER SUPPLY		ø, Hz	1ø 50Hz			1ø 50Hz				
		V	220	230	240	220	230	240	Min	Max
COOLING	CAPACITY	kW	5.0	5.0	5.0				1.5	5.6
		BTU/h	17100	17100	17100				5100	19100
	CURRENT	A	0.39	0.38	0.37	6.55	6.25	6.00	-	-
	INPUT POWER	W	40	40	40	1.340k	1.340k	1.340k	-	-
		TOTAL W		-		1.380k	1.380k	1.380k	260	2.050k
	ANNUAL CONSUMPTION	TOTAL kWh ※4		-		-	690	-	-	-
	EER/EER CLASS	TOTAL(W/W)※5("A"~"G")	-	-	-	3.62	3.62 / A	3.62	5.77	2.73
	Erp ※6	Pdsign kW	-	-	-	-	5.0	-		
		SEER (W/W)	-	-	-	-	6.4	-		
		Annual consumption kWh	-	-	-	-	273	-		
		Class	-	-	-	-	A++	-		
	POWER FACTOR	%	-	-	-	93	93	93	-	-
	NOISE INDOOR (H/M/L)	dB-A		37/33/29						
		Power Level dB		55/51/47						
	NOISE OUTDOOR (H/L)	dB-A					46/-			
		Power Level dB					65/-			
HEATING	CAPACITY	kW	5.6	5.6	5.6				1.5	6.5
		BTU/h	19100	19100	19100				5100	22200
	CURRENT	A	0.39	0.38	0.37	6.70	6.40	6.15	-	-
	INPUT POWER	W	40	40	40	1.370k	1.370k	1.370k	-	-
		TOTAL W		-		1.410k	1.410k	1.410k	220	2.300k
	COP/COP CLASS	TOTAL(W/W)※5("A"~"G")	-	-	-	3.97	3.97 / A	3.97	6.82	2.83
	Erp ※6	Pdsign kW	-	-	-	-	4.0	-		
		Tbivalen °C	-	-	-	-	-10	-		
		SCOP (W/W)	-	-	-	-	4.0	-		
		Annual consumption kWh	-	-	-	-	1400	-		
		Class	-	-	-	-	A+	-		
	POWER FACTOR	%	-	-	-	93	93	93	-	-
	NOISE INDOOR (H/M/L)	dB-A		37/33/29			-		/	/
		Power Level dB		55/51/47			-			
	NOISE OUTDOOR (H/L)	dB-A		-			50/-		/	/
		Power Level dB		-			69/-			
EXTRA LOW TEMP	Total CAPACITY(kW)/INPUT POWER(W)/COP					-				
MAX CURRENT(A)/MAX INPUT POWER(W)			0.39/40	0.38/40	0.37/40	12.0/2.46k	12.0/2.57k	12.0/2.68k	/	
STARTING CURRENT(A)/COMP OUTPUT(W)			-	-	-	6.70/0.9k	6.40/0.9k	6.15/0.9k	/	
NETWORK IMPEDANCE (ΩMAX.)				-			-			
FM OUTPUT (W)				43			90		/	
MOISTURE REMOVAL VOLUME		L/h(Pt/h)	2.8		(5.9)		-			
External static pressure		Pa		-						
I/D AIR FLOW	COOL	m^3/min (ft^3/min)		15/12.5/10.5 (530/441/371)						
	HEAT	m^3/min (ft^3/min)		15/12.5/10.5 (530/441/371)						
O/D AIR FLOW	COOL	m^3/min (ft^3/min)					30	(1059)		
	HEAT	m^3/min (ft^3/min)					35	(1236)		
REFRIGERANT TYPE, AMOUNT g(oz)						R410A	1.65k	(58.2)	/	
PROD	HEIGHT : H mm(inch)			235 (9-1/4)			569 (22-13/32)		/	
	WIDTH : W mm(inch)			960 (37-25/32)			790 (31-7/64)		/	
	DEPTH : D mm(inch)			690 (27-5/32)			285 (11-7/32)		/	
PACK	HEIGHT : H mm			360			645		/	
	WIDTH : W mm			1025			921		/	
	DEPTH : D mm			820			386		/	
MASS	(NET) kg(lb)			27 (60)			42 (93)		/	
	(GROSS) kg(lb)			34 (75)			46 (101)		/	
LAYERS LIMIT (actually)				9 (10)			4 (5)			
Operation Condition		Cool O.D(DBT)		18°C ~ 32°C			-15°C ~ 46°C			
		Heat O.D(DBT)		16°C ~ 30°C			-20°C ~ 24°C			
PIPING	PIPE DIAMETER mm (inch)		(Liquid)ø6.35(1/4) (Gas)ø12.7(1/2)			(Liquid)ø6.35(1/4) (Gas)ø12.7(1/2)				
	CONNECT METHOD, STD LENGTH m (ft)		flared type, 5.0(16.4)			flared type, 5.0(16.4)				
	PIPE LENGTH RANGE m (ft)		5 ~ 40 (16.4 ~ 131.2)						~	~
	I/D&O/D HEIGHT DIFFERENCE m (ft)		15 (OD located lower) / 30 (OD located higher) (49.2/98.4)							
	ADD GAS AMOUNT g/m (oz/ft)		20 (0.215)							
	PIPE LENGTH FOR ADDITIONAL GAS m (ft)		30 (98.4)							

*1: In case it is necessary to indicate the air □ow volume in (l/s), the value in (m^3/min.) shall be multiplied by 16.7 and rounded down the decimal point.
*2: If the EUROVENT Certi□ed models can be operated under the □extra-low□temperature condition, -7□C dry bulb and -8□C wet-bulb temperatures with rated voltage 230 V shall be used.
*3: Network Impedance shall be applicable for EUROPE and CHINA models.
*4: The annual consumption is calculated by multiplying the input power at 230 V (400 V) by an average of 500 hours per year in cooling mode.
*5: EER and COP classification is at 230 V (400 V) only in accordance with EU directive 2002/31/EC.
*6: SEER and SCOP classification is at 230V(400V) only in accordance with EN-14825. For heating, SCOP indicates the value of only Average heating season, Other fiche data indicates in an attached sheet.

Simultaneous (Twin) -Type

1-1. Unit Speci□cations

PE1

2. Ceiling Type S-50PT2E5A×2 / U-100PE1E5A

INDOOR		MODEL	S-50PT2E5A×2							
PANEL		MODEL	-				-			
OUTDOOR		MODEL				U-100PE1E5A				
Branch pipe		MODEL	CZ-P155BK1							
PERFORMANCE TEST CONDITION			ISO5151 / EN14511 / EN14825 / EN12102							
POWER SUPPLY		ø, Hz	1ø 50Hz			1ø 50Hz				
		V	220	230	240	220	230	240	Min	Max
COOLING	CAPACITY	kW	10.0	10.0	10.0				3.3	12.5
		BTU/h	34100	34100	34100				11300	42700
	CURRENT	A	0.39×2	0.38×2	0.37×2	11.5	11.1	10.6	-	-
	INPUT POWER	W	40×2	40×2	40×2	2.450k	2.450k	2.450k	-	-
		TOTAL W		-		2.530k	2.530k	2.530k	840	3.850k
	ANNUAL CONSUMPTION	TOTAL kWh ※4		-		-	1265	-	-	-
	EER/EER CLASS	TOTAL(W/W)※5/("A"~"G")	-	-	-	3.95	3.95 / A	3.95	3.93	3.25
	Erp ※6 Pdsign	kW	-	-	-	-	10.0	-		
	Erp ※6 SEER	(W/W)	-	-	-	-	6.5	-		
	Erp ※6 Annual consumption	kWh	-	-	-	-	539	-		
	Erp ※6 Class		-	-	-	-	A++	-		
	POWER FACTOR	%	-	-	-	97	96	96	-	-
	NOISE INDOOR (H/M/L)	dB-A		37/33/29						
		Power Level dB		55/51/47						
	NOISE OUTDOOR (H/L)	dB-A					52/-			
		Power Level dB					69/-			
HEATING	CAPACITY	kW	11.2	11.2	11.2				4.1	14.0
		BTU/h	38200	38200	38200				14000	47800
	CURRENT	A	0.39×2	0.38×2	0.37×2	11.8	11.4	11.0	-	-
	INPUT POWER	W	40×2	40×2	40×2	2.520k	2.520k	2.520k	-	-
		TOTAL W		-		2.600k	2.600k	2.600k	900	4.400k
	COP/COP CLASS	TOTAL(W/W)※5/("A"~"G")	-	-	-	4.31	4.31 / A	4.31	4.56	3.18
	Erp ※6 Pdsign	kW	-	-	-	-	10.0	-		
	Erp ※6 Tbivalen	°C	-	-	-	-	-10	-		
	Erp ※6 SCOP	(W/W)	-	-	-	-	4.3	-		
	Erp ※6 Annual consumption	kWh	-	-	-	-	3256	-		
	Erp ※6 Class		-	-	-	-	A+	-		
	POWER FACTOR	%	-	-	-	97	96	95	-	-
	NOISE INDOOR (H/M/L)	dB-A		37/33/29			-		/	/
		Power Level dB		55/51/47			-			
	NOISE OUTDOOR (H/L)	dB-A		-			52/-		/	/
		Power Level dB		-			69/-			
EXTRA LOW TEMP	Total CAPACITY(kW)/INPUT POWER(W)/COP					-				
MAX CURRENT(A)/MAX INPUT POWER(W)			0.39×2/40×2	0.38×2/40×2	0.37×2/40×2	25.0/5.34k	25.0/5.52k	25.0/5.70k	/	
STARTING CURRENT(A)/COMP OUTPUT(W)			-	-	-	11.8/3.0k	11.4/3.0k	11.0/3.0k	/	
NETWORK IMPEDANCE (ΩMAX.)				-			-			
FM OUTPUT (W)				43			90×2		/	
MOISTURE REMOVAL VOLUME		L/h(Pt/h)	6.0	(3.0×2)	(12.6)		-			
External static pressure		Pa		-						
I/D AIR FLOW	COOL	m^3/min (ft^3/min)		[15/12.5/10.5 (530/441/371)]×2						
	HEAT	m^3/min (ft^3/min)		[15/12.5/10.5 (530/441/371)]×2						
O/D AIR FLOW	COOL	m^3/min (ft^3/min)				110		(3885)		
	HEAT	m^3/min (ft^3/min)				95		(3355)		
REFRIGERANT TYPE, AMOUNT g(oz)						R410A	3.40k	(119.9)	/	
PROD	HEIGHT : H mm(inch)			235 (9-1/4)			1416 (55-3/4)		/	
	WIDTH : W mm(inch)			960 (37-25/32)			940 (37-1/32)		/	
	DEPTH : D mm(inch)			690 (27-5/32)			340 (13-13/32)		/	
PACK	HEIGHT : H mm			360			1556		/	
	WIDTH : W mm			1025			1055		/	
	DEPTH : D mm			820			485		/	
MASS	(NET) kg(lb)			27 (60)			98 (216)		/	
	(GROSS) kg(lb)			34 (75)			108 (238)		/	
LAYERS LIMIT (actually)				9 (10)			1 (2)			
Operation Condition		Cool O.D(DBT)		18°C ~ 32°C			-15°C ~ 46°C			
		Heat O.D(DBT)		16°C ~ 30°C			-20°C ~ 24°C			
PIPING	PIPE DIAMETER mm (inch)		(Liquid)ø6.35(1/4) (Gas)ø12.7(1/2)			(Liquid)ø9.52(3/8) (Gas)ø15.88(5/8)				
	CONNECT METHOD, STD LENGTH m (ft)		flared type, 5.0(16.4)			flared type, 5.0(16.4)				
	PIPE LENGTH RANGE m (ft)		5 ~ 75 (16.4 ~ 246.1)						~	~
	I/D&O/D HEIGHT DIFFERENCE m (ft)		15 (OD located lower) / 30 (OD located higher) (49.2/98.4)							
	ADD GAS AMOUNT g/m (oz/ft)		50 (0.538)							
	PIPE LENGTH FOR ADDITIONAL GAS m (ft)		30 (98.4)							

*1: In case it is necessary to indicate the air □ow volume in (l/s), the value in (m^3/min.) shall be multiplied by 16.7 and rounded down the decimal point.
*2: If the EUROVENT Certi□ed models can be operated under the □extra-low□temperature condition, -7□C dry bulb and -8□C wet-bulb temperatures with rated voltage 230 V shall be used.
*3: Network Impedance shall be applicable for EUROPE and CHINA models.
*4: The annual consumption is calculated by multiplying the input power at 230 V (400 V) by an average of 500 hours per year in cooling mode.
*5: EER and COP classification is at 230 V (400 V) only in accordance with EU directive 2002/31/EC.
*6: SEER and SCOP classification is at 230V(400V) only in accordance with EN-14825. For heating, SCOP indicates the value of only Average heating season, Other fiche data indicates in an attached sheet.

Simultaneous (Triple) -Type

1-1. Unit Speci□cations

PE1

2. Ceiling Type S-50PT2E5A×3 / U-140PE1E5A

INDOOR		MODEL	S-50PT2E5A×3							
PANEL		MODEL	-			-				
OUTDOOR		MODEL				U-140PE1E5A				
Branch pipe		MODEL	CZ-P3HPC2BM							
PERFORMANCE TEST CONDITION			ISO5151 / EN14511 / EN12102							
POWER SUPPLY		ø, Hz	1ø 50Hz			1ø 50Hz				
		V	220	230	240	220	230	240	Min	Max
COOLING	CAPACITY	kW	14.0	14.0	14.0				3.3	15.5
		BTU/h	47800	47800	47800				11300	51200
	CURRENT	A	0.39×3	0.38×3	0.37×3	21.2	20.5	19.8	-	-
	INPUT POWER	W	40×3	40×3	40×3	4.530k	4.530k	4.530k	-	-
		TOTAL W		-		4.650k	4.650k	4.650k	840	5.650k
	ANNUAL CONSUMPTION	TOTAL kWh ※4		-		-	2325	-	-	-
	EER/EER CLASS	TOTAL(W/W)※5("A"~"G")	-	-	-	3.01	3.01 / B	3.01	3.93	2.65
	Erp ※6 Pdsign	kW	-	-	-	-	-	-		
	Erp ※6 SEER	(W/W)	-	-	-	-	-	-		
	Erp ※6 Annual consumption	kWh	-	-	-	-	-	-		
	Erp ※6 Class		-	-	-	-	-	-		
	POWER FACTOR	%	-	-	-	97	96	95	-	-
	NOISE INDOOR (H/M/L)	dB-A		37/33/29						
		Power Level dB		55/51/47						
	NOISE OUTDOOR (H/L)	dB-A					54/-			
		Power Level dB					71/-			
HEATING	CAPACITY	kW	16.0	16.0	16.0				4.1	18.0
		BTU/h	54600	54600	54600				14000	61400
	CURRENT	A	0.39×3	0.38×3	0.37×3	19.8	19.2	18.5	-	-
	INPUT POWER	W	40×3	40×3	40×3	4.240k	4.240k	4.240k	-	-
		TOTAL W		-		4.360k	4.360k	4.360k	900	5.930k
	COP/COP CLASS	TOTAL(W/W)※5("A"~"G")	-	-	-	3.67	3.67 / A	3.67	4.56	3.04
	Erp ※6 Pdsign	kW	-	-	-	-	-	-		
	Erp ※6 Tbivalen	°C	-	-	-	-	-	-		
	Erp ※6 SCOP	(W/W)	-	-	-	-	-	-		
	Erp ※6 Annual consumption	kWh	-	-	-	-	-	-		
	Erp ※6 Class		-	-	-	-	-	-		
	POWER FACTOR	%	-	-	-	97	96	95	-	-
	NOISE INDOOR (H/M/L)	dB-A		37/33/29			-		/	/
		Power Level dB		55/51/47			-			
	NOISE OUTDOOR (H/L)	dB-A		-			55/-		/	/
		Power Level dB		-			71/-			
EXTRA LOW TEMP	Total CAPACITY(kW)/INPUT POWER(W)/COP					-				
MAX CURRENT(A)/MAX INPUT POWER(W)			0.39×3/40×3	0.38×3/40×3	0.37×3/40×3	30.0/6.40k	30.0/6.62k	30.0/6.84k	/	
STARTING CURRENT(A)/COMP OUTPUT(W)			-	-	-	21.2/3.0k	20.5/3.0k	19.8/3.0k	/	
NETWORK IMPEDANCE (ΩMAX.)				-			-			
FM OUTPUT (W)				43			90×2		/	
MOISTURE REMOVAL VOLUME		L/h(Pt/h)	9.0	(3.0×3)	(18.9)		-			
External static pressure		Pa		-						
I/D AIR FLOW	COOL	m^3/min (ft^3/min)		[15/12.5/10.5 (530/441/371)]×3						
	HEAT	m^3/min (ft^3/min)		[15/12.5/10.5 (530/441/371)]×3						
O/D AIR FLOW	COOL	m^3/min (ft^3/min)				135		(4767)		
	HEAT	m^3/min (ft^3/min)				120		(4238)		
REFRIGERANT TYPE, AMOUNT g(oz)						R410A	3.40k	(119.9)	/	
PROD	HEIGHT : H mm(inch)			235 (9-1/4)			1416 (55-3/4)		/	
	WIDTH : W mm(inch)			960 (37-25/32)			940 (37-1/32)		/	
	DEPTH : D mm(inch)			690 (27-5/32)			340 (13-13/32)		/	
PACK	HEIGHT : H mm			360			1556		/	
	WIDTH : W mm			1025			1055		/	
	DEPTH : D mm			820			485		/	
MASS	(NET) kg(lb)			27 (60)			98 (216)		/	
	(GROSS) kg(lb)			34 (75)			108 (238)		/	
LAYERS LIMIT (actually)				9 (10)			1 (2)			
Operation Condition		Cool O.D(DBT)		18°C ~ 32°C			-15°C ~ 46°C			
		Heat O.D(DBT)		16°C ~ 30°C			-20°C ~ 24°C			
PIPING	PIPE DIAMETER mm (inch)		(Liquid)ø6.35(1/4) (Gas)ø12.7(1/2)			(Liquid)ø9.52(3/8) (Gas)ø15.88(5/8)				
	CONNECT METHOD, STD LENGTH m (ft)		flared type, 5.0(16.4)			flared type, 5.0(16.4)				
	PIPE LENGTH RANGE m (ft)			5 ~ 75 (16.4 ~ 246.1)					~	~
	I/D&O/D HEIGHT DIFFERENCE m (ft)		15 (OD located lower) / 30 (OD located higher) (49.2/98.4)							
	ADD GAS AMOUNT g/m (oz/ft)			50 (0.538)						
	PIPE LENGTH FOR ADDITIONAL GAS m (ft)			20 (65.6)						

*1: In case it is necessary to indicate the air □ow volume in (l/s), the value in (m^3/min.) shall be multiplied by 16.7 and rounded down the decimal point.
*2: If the EUROVENT Certi□ed models can be operated under the □extra-low□temperature condition, -7□C dry bulb and -8□C wet-bulb temperatures with rated voltage 230 V shall be used.
*3: Network Impedance shall be applicable for EUROPE and CHINA models.
*4: The annual consumption is calculated by multiplying the input power at 230 V (400 V) by an average of 500 hours per year in cooling mode.
*5: EER and COP classification is at 230 V (400 V) only in accordance with EU directive 2002/31/EC.
*6: SEER and SCOP classification is at 230V(400V) only in accordance with EN-14825. For heating, SCOP indicates the value of only Average heating season, Other fiche data indicates in an attached sheet.

Single -Type

1-1. Unit Speci□cations

PE1

2. Ceiling Type S-60PT2E5A / U-60PE1E5A

INDOOR		MODEL	S-60PT2E5A							
PANEL		MODEL	-			-				
OUTDOOR		MODEL	U-60PE1E5A							
Branch pipe		MODEL	-							
PERFORMANCE TEST CONDITION			ISO5151 / EN14511 / EN14825 / EN12102							
POWER SUPPLY		ø, Hz	1ø 50Hz			1ø 50Hz				
		V	220	230	240	220	230	240	Min	Max
COOLING	CAPACITY	kW	6.0	6.0	6.0				2.5	7.1
		BTU/h	20500	20500	20500				8500	24200
	CURRENT	A	0.42	0.41	0.40	7.15	6.90	6.70	-	-
	INPUT POWER	W	50	50	50	1.440k	1.440k	1.440k	-	-
		TOTAL W		-		1.490k	1.490k	1.490k	450	2.010k
	ANNUAL CONSUMPTION	TOTAL kWh ※4		-		-	745	-	-	-
	EER/EER CLASS	TOTAL(W/W)※5("A"~"G")	-	-	-	4.03	4.03 / A	4.03	5.56	3.53
	Erp ※6 Pdsign	kW	-	-	-	-	6.0	-		
	Erp ※6 SEER	(W/W)	-	-	-	-	6.8	-		
	Erp ※6 Annual consumption	kWh	-	-	-	-	309	-		
	Erp ※6 Class		-	-	-	-	A++	-		
	POWER FACTOR	%	-	-	-	92	91	90	-	-
	NOISE INDOOR (H/M/L)	dB-A		38/34/30						
		Power Level dB		56/52/48						
	NOISE OUTDOOR (H/L)	dB-A					48/-			
		Power Level dB					65/-			
HEATING	CAPACITY	kW	7.0	7.0	7.0				2.0	8.0
		BTU/h	23900	23900	23900				6800	27300
	CURRENT	A	0.42	0.41	0.40	8.10	7.80	7.60	-	-
	INPUT POWER	W	50	50	50	1.690k	1.690k	1.690k	-	-
		TOTAL W		-		1.740k	1.740k	1.740k	400	2.480k
	COP/COP CLASS	TOTAL(W/W)※5("A"~"G")	-	-	-	4.02	4.02 / A	4.02	5.00	3.23
	Erp ※6 Pdsign	kW	-	-	-	-	6.0	-		
	Erp ※6 Tbivalen	°C	-	-	-	-	-10	-		
	Erp ※6 SCOP	(W/W)	-	-	-	-	4.1	-		
	Erp ※6 Annual consumption	kWh	-	-	-	-	2049	-		
	Erp ※6 Class		-	-	-	-	A+	-		
	POWER FACTOR	%	-	-	-	95	94	93	-	-
	NOISE INDOOR (H/M/L)	dB-A		38/34/30			-		/	/
		Power Level dB		56/52/48			-			
	NOISE OUTDOOR (H/L)	dB-A		-			50/-		/	/
		Power Level dB		-			67/-			
EXTRA LOW TEMP	Total CAPACITY(kW)/INPUT POWER(W)/COP					-				
MAX CURRENT(A)/MAX INPUT POWER(W)			0.42/50	0.41/50	0.40/50	18.0/3.76k	18.0/3.89k	18.0/4.02k	/	
STARTING CURRENT(A)/COMP OUTPUT(W)			-	-	-	8.10/1.7k	7.80/1.7k	7.60/1.7k	/	
NETWORK IMPEDANCE (ΩMAX.)				-			-			
FM OUTPUT (W)				74			90		/	
MOISTURE REMOVAL VOLUME		L/h(Pt/h)	3.4		(7.1)		-			
External static pressure		Pa		-						
I/D AIR FLOW	COOL	m^3/min (ft^3/min)		20/17/14.5 (706/600/512)						
	HEAT	m^3/min (ft^3/min)		20/17/14.5 (706/600/512)						
O/D AIR FLOW	COOL	m^3/min (ft^3/min)					60	(2119)		
	HEAT	m^3/min (ft^3/min)					60	(2119)		
REFRIGERANT TYPE, AMOUNT g(oz)						R410A	2.00k	(70.5)	/	
PROD	HEIGHT : H mm(inch)			235 (9-1/4)			996 (39-7/32)		/	
	WIDTH : W mm(inch)			1275 (50-3/16)			940 (37-1/32)		/	
	DEPTH : D mm(inch)			690 (27-5/32)			340 (13-13/32)		/	
PACK	HEIGHT : H mm			360			1136		/	
	WIDTH : W mm			1340			1055		/	
	DEPTH : D mm			820			485		/	
MASS	(NET) kg(lb)			33 (73)			68 (150)		/	
	(GROSS) kg(lb)			42 (93)			76 (168)		/	
LAYERS LIMIT (actually)				9 (10)			2 (3)			
Operation Condition		Cool O.D(DBT)		18°C ~ 32°C			-15°C ~ 46°C			
		Heat O.D(DBT)		16°C ~ 30°C			-20°C ~ 24°C			
PIPING	PIPE DIAMETER mm (inch)		(Liquid)ø9.52(3/8) (Gas)ø15.88(5/8)			(Liquid)ø9.52(3/8) (Gas)ø15.88(5/8)				
	CONNECT METHOD, STD LENGTH m (ft)		flared type, 5.0(16.4)			flared type, 5.0(16.4)				
	PIPE LENGTH RANGE m (ft)		5 ~ 50 (16.4 ~ 164)						~	~
	I/D&O/D HEIGHT DIFFERENCE m (ft)		15 (OD located lower) / 30 (OD located higher) (49.2/98.4)							
	ADD GAS AMOUNT g/m (oz/ft)		50 (0.538)							
	PIPE LENGTH FOR ADDITIONAL GAS m (ft)		30 (98.4)							

*1: In case it is necessary to indicate the air □ow volume in (l/s), the value in (m^3/min.) shall be multiplied by 16.7 and rounded down the decimal point.
*2: If the EUROVENT Certi□ed models can be operated under the □extra-low□temperature condition, -7□C dry bulb and -8□C wet-bulb temperatures with rated voltage 230 V shall be used.
*3: Network Impedance shall be applicable for EUROPE and CHINA models.
*4: The annual consumption is calculated by multiplying the input power at 230 V (400 V) by an average of 500 hours per year in cooling mode.
*5: EER and COP classification is at 230 V (400 V) only in accordance with EU directive 2002/31/EC.
*6: SEER and SCOP classification is at 230V(400V) only in accordance with EN-14825. For heating, SCOP indicates the value of only Average heating season, Other fiche data indicates in an attached sheet.

Simultaneous (Twin) -Type

1-1. Unit Speci□cations

PE1

2. Ceiling Type S-60PT2E5A×2 / U-125PE1E5A

INDOOR		MODEL	S-60PT2E5A×2							
PANEL		MODEL	-			-				
OUTDOOR		MODEL				U-125PE1E5A				
Branch pipe		MODEL	CZ-P155BK1							
PERFORMANCE TEST CONDITION			ISO5151 / EN14511 / EN12102							
POWER SUPPLY		ø, Hz	1ø 50Hz			1ø 50Hz				
		V	220	230	240	220	230	240	Min	Max
COOLING	CAPACITY	kW	12.5	12.5	12.5				3.3	14.0
		BTU/h	42700	42700	42700				11300	47800
	CURRENT	A	0.42×2	0.41×2	0.40×2	17.0	16.4	15.9	-	-
	INPUT POWER	W	50×2	50×2	50×2	3.630k	3.630k	3.630k	-	-
		TOTAL W		-		3.730k	3.730k	3.730k	840	4.860k
	ANNUAL CONSUMPTION	TOTAL kWh ※4		-		-	1865	-	-	-
	EER/EER CLASS	TOTAL(W/W) ※5/("A"~"G")	-	-	-	3.35	3.35 / A	3.35	3.93	2.88
	Erp ※6 Pdsign	kW	-	-	-	-	-	-		
	Erp ※6 SEER	(W/W)	-	-	-	-	-	-		
	Erp ※6 Annual consumption	kWh	-	-	-	-	-	-		
	Erp ※6 Class		-	-	-	-	-	-		
	POWER FACTOR	%	-	-	-	97	96	95	-	-
	NOISE INDOOR (H/M/L)	dB-A		38/34/30						
		Power Level dB		56/52/48						
	NOISE OUTDOOR (H/L)	dB-A					53/-			
		Power Level dB					70/-			
HEATING	CAPACITY	kW	14.0	14.0	14.0				4.1	16.0
		BTU/h	47800	47800	47800				14000	54600
	CURRENT	A	0.42×2	0.41×2	0.40×2	16.0	15.4	14.9	-	-
	INPUT POWER	W	50×2	50×2	50×2	3.410k	3.410k	3.410k	-	-
		TOTAL W		-		3.510k	3.510k	3.510k	900	5.210k
	COP/COP CLASS	TOTAL(W/W) ※5/("A"~"G")	-	-	-	3.99	3.99 / A	3.99	4.56	3.07
	Erp ※6 Pdsign	kW	-	-	-	-	-	-		
	Erp ※6 Tbivalen	°C	-	-	-	-	-	-		
	Erp ※6 SCOP	(W/W)	-	-	-	-	-	-		
	Erp ※6 Annual consumption	kWh	-	-	-	-	-	-		
	Erp ※6 Class		-	-	-	-	-	-		
	POWER FACTOR	%	-	-	-	97	96	95	-	-
	NOISE INDOOR (H/M/L)	dB-A		38/34/30			-		/	/
		Power Level dB		56/52/48			-			
	NOISE OUTDOOR (H/L)	dB-A		-			53/-		/	/
		Power Level dB		-			70/-			
EXTRA LOW TEMP	Total CAPACITY(kW)/INPUT POWER(W)/COP					-				
MAX CURRENT(A)/MAX INPUT POWER(W)			0.42×2/50×2	0.41×2/50×2	0.40×2/50×2	28.0/5.98k	28.0/6.18k	28.0/6.38k	/	
STARTING CURRENT(A)/COMP OUTPUT(W)			-	-	-	17.0/3.0k	16.4/3.0k	15.8/3.0k	/	
NETWORK IMPEDANCE (ΩMAX.)				-			-			
FM OUTPUT (W)				74			90×2		/	
MOISTURE REMOVAL VOLUME		L/h(Pt/h)	7.9	(3.95×2)	(16.6)		-			
External static pressure		Pa		-						
I/D AIR FLOW	COOL	m^3/min (ft^3/min)		[20/17/14.5 (706/600/512)]×2						
	HEAT	m^3/min (ft^3/min)		[20/17/14.5 (706/600/512)]×2						
O/D AIR FLOW	COOL	m^3/min (ft^3/min)				130		(4591)		
	HEAT	m^3/min (ft^3/min)				110		(3885)		
REFRIGERANT TYPE, AMOUNT g(oz)						R410A	3.40k	(119.9)	/	
PROD IM	HEIGHT : H mm(inch)			235 (9-1/4)			1416 (55-3/4)		/	
	WIDTH : W mm(inch)			1275 (50-3/16)			940 (37-1/32)		/	
	DEPTH : D mm(inch)			690 (27-5/32)			340 (13-13/32)		/	
PACK IM	HEIGHT : H mm			360			1556		/	
	WIDTH : W mm			1340			1055		/	
	DEPTH : D mm			820			485		/	
MASS	(NET) kg(lb)			33 (73)			98 (216)		/	
	(GROSS) kg(lb)			42 (93)			108 (238)		/	
LAYERS LIMIT (actually)				9 (10)			1 (2)			
Operation Condition		Cool O.D(DBT)		18°C ~ 32°C			-15°C ~ 46°C			
		Heat O.D(DBT)		16°C ~ 30°C			-20°C ~ 24°C			
PIPING	PIPE DIAMETER mm (inch)		(Liquid)ø9.52(3/8) (Gas)ø15.88(5/8)			(Liquid)ø9.52(3/8) (Gas)ø15.88(5/8)				
	CONNECT METHOD, STD LENGTH m (ft)		flared type, 5.0(16.4)			flared type, 5.0(16.4)				
	PIPE LENGTH RANGE m (ft)			5 ~ 75 (16.4 ~ 246.1)					~	~
	I/D&O/D HEIGHT DIFFERENCE m (ft)		15 (OD located lower) / 30 (OD located higher) (49.2/98.4)							
	ADD GAS AMOUNT g/m (oz/ft)			50 (0.538)						
	PIPE LENGTH FOR ADDITIONAL GAS m (ft)			30 (98.4)						

*1: In case it is necessary to indicate the air □ow volume in (l/s), the value in (m^3/min.) shall be multiplied by 16.7 and rounded down the decimal point.
*2: If the EUROVENT Certi□ed models can be operated under the □extra-low□temperature condition, -7□C dry bulb and -8□C wet-bulb temperatures with rated voltage 230 V shall be used.
*3: Network Impedance shall be applicable for EUROPE and CHINA models.
*4: The annual consumption is calculated by multiplying the input power at 230 V (400 V) by an average of 500 hours per year in cooling mode.
*5: EER and COP classification is at 230 V (400 V) only in accordance with EU directive 2002/31/EC.
*6: SEER and SCOP classification is at 230V(400V) only in accordance with EN-14825. For heating, SCOP indicates the value of only Average heating season, Other fiche data indicates in an attached sheet.

Single -Type

1-1. Unit Speci□cations

PE1

2. Ceiling Type S-71PT2E5A / U-71PE1E5A

INDOOR		MODEL	S-71PT2E5A							
PANEL		MODEL	-			-				
OUTDOOR		MODEL	U-71PE1E5A							
Branch pipe		MODEL	-							
PERFORMANCE TEST CONDITION			ISO5151 / EN14511 / EN14825 / EN12102							
POWER SUPPLY		ø, Hz	1ø 50Hz			1ø 50Hz				
		V	220	230	240	220	230	240	Min	Max
COOLING	CAPACITY	kW	7.1	7.1	7.1				2.5	8.0
		BTU/h	24200	24200	24200				8500	27300
	CURRENT	A	0.45	0.44	0.43	9.00	8.70	8.40	-	-
	INPUT POWER	W	55	55	55	1.875k	1.875k	1.875k	-	-
		TOTAL W		-		1.930k	1.930k	1.930k	450	2.780k
	ANNUAL CONSUMPTION	TOTAL kWh ※4		-		-	965	-	-	-
	EER/EER CLASS	TOTAL(W/W)※5("A"~"G")	-	-	-	3.68	3.68 / A	3.68	5.56	2.88
	Erp ※6	Pdsign kW	-	-	-	-	7.1	-		
		SEER (W/W)	-	-	-	-	6.2	-		
		Annual consumption kWh	-	-	-	-	401	-		
		Class	-	-	-	-	A++	-		
	POWER FACTOR	%	-	-	-	95	94	93	-	-
	NOISE INDOOR (H/M/L)	dB-A	39/35/31							
		Power Level dB	57/53/49							
	NOISE OUTDOOR (H/L)	dB-A				48/-				
		Power Level dB				65/-				
HEATING	CAPACITY	kW	8.0	8.0	8.0				2.0	9.0
		BTU/h	27300	27300	27300				6800	30700
	CURRENT	A	0.45	0.44	0.43	8.90	8.60	8.30	-	-
	INPUT POWER	W	55	55	55	1.875k	1.875k	1.875k	-	-
		TOTAL W		-		1.930k	1.930k	1.930k	400	2.900k
	COP/COP CLASS	TOTAL(W/W)※5("A"~"G")	-	-	-	4.15	4.15 / A	4.15	5.00	3.10
	Erp ※6	Pdsign kW	-	-	-	-	7.1	-		
		Tbivalen °C	-	-	-	-	-10	-		
		SCOP (W/W)	-	-	-	-	4.0	-		
		Annual consumption kWh	-	-	-	-	2485	-		
		Class	-	-	-	-	A+	-		
	POWER FACTOR	%	-	-	-	96	95	94	-	-
	NOISE INDOOR (H/M/L)	dB-A	39/35/31				-		/	/
		Power Level dB	57/53/49				-			
	NOISE OUTDOOR (H/L)	dB-A		-			50/-		/	/
		Power Level dB		-			67/-			
EXTRA LOW TEMP	Total CAPACITY(kW)/INPUT POWER(W)/COP					-				
MAX CURRENT(A)/MAX INPUT POWER(W)			0.45/55	0.44/55	0.43/55	18.0/3.76k	18.0/3.89k	18.0/4.02k	/	
STARTING CURRENT(A)/COMP OUTPUT(W)			-	-	-	9.00/2.0k	8.70/2.0k	8.40/2.0k	/	
NETWORK IMPEDANCE (ΩMAX.)				-			-			
FM OUTPUT (W)				74			90		/	
MOISTURE REMOVAL VOLUME		L/h(Pt/h)	4.2		(8.8)		-			
External static pressure		Pa		-						
I/D AIR FLOW	COOL	m^3/min (ft^3/min)	21/18/15.5 (742/636/547)							
	HEAT	m^3/min (ft^3/min)	21/18/15.5 (742/636/547)							
O/D AIR FLOW	COOL	m^3/min (ft^3/min)				60		(2119)		
	HEAT	m^3/min (ft^3/min)				60		(2119)		
REFRIGERANT TYPE, AMOUNT g(oz)						R410A	2.35k	(82.9)	/	
PROD	HEIGHT : H mm(inch)		235 (9-1/4)			996 (39-7/32)			/	
	WIDTH : W mm(inch)		1275 (50-3/16)			940 (37-1/32)			/	
	DEPTH : D mm(inch)		690 (27-5/32)			340 (13-13/32)			/	
PACK	HEIGHT : H mm		360			1136			/	
	WIDTH : W mm		1340			1055			/	
	DEPTH : D mm		820			485			/	
MASS	(NET) kg(lb)		33 (73)			69 (152)			/	
	(GROSS) kg(lb)		42 (93)			77 (170)			/	
LAYERS LIMIT (actually)			9 (10)			2 (3)				
Operation Condition		Cool O.D(DBT)	18°C ~ 32°C			-15°C ~ 46°C				
		Heat O.D(DBT)	16°C ~ 30°C			-20°C ~ 24°C				
PIPING	PIPE DIAMETER mm (inch)		(Liquid)ø9.52(3/8) (Gas)ø15.88(5/8)			(Liquid)ø9.52(3/8) (Gas)ø15.88(5/8)				
	CONNECT METHOD, STD LENGTH m (ft)		flared type, 5.0(16.4)			flared type, 5.0(16.4)				
	PIPE LENGTH RANGE m (ft)		5 ~ 50 (16.4 ~ 164)						~	~
	I/D&O/D HEIGHT DIFFERENCE m (ft)		15 (OD located lower) / 30 (OD located higher) (49.2/98.4)							
	ADD GAS AMOUNT g/m (oz/ft)		50 (0.538)							
	PIPE LENGTH FOR ADDITIONAL GAS m (ft)		30 (98.4)							

*1: In case it is necessary to indicate the air □ow volume in (l/s), the value in (m^3/min.) shall be multiplied by 16.7 and rounded down the decimal point.
*2: If the EUROVENT Certi□ed models can be operated under the □extra-low□temperature condition, -7□C dry bulb and -8□C wet-bulb temperatures with rated voltage 230 V shall be used.
*3: Network Impedance shall be applicable for EUROPE and CHINA models.
*4: The annual consumption is calculated by multiplying the input power at 230 V (400 V) by an average of 500 hours per year in cooling mode.
*5: EER and COP classification is at 230 V (400 V) only in accordance with EU directive 2002/31/EC.
*6: SEER and SCOP classification is at 230V(400V) only in accordance with EN-14825. For heating, SCOP indicates the value of only Average heating season, Other fiche data indicates in an attached sheet.

Simultaneous (Twin) -Type

1-1. Unit Speci□cations

PE1

2. Ceiling Type S-71PT2E5A×2 / U-140PE1E5A

INDOOR		MODEL	S-71PT2E5A×2							
PANEL		MODEL	-			-				
OUTDOOR		MODEL				U-140PE1E5A				
Branch pipe		MODEL	CZ-P155BK1							
PERFORMANCE TEST CONDITION			ISO5151 / EN14511 / EN12102							
POWER SUPPLY		ø, Hz	1ø 50Hz			1ø 50Hz				
		V	220	230	240	220	230	240	Min	Max
COOLING	CAPACITY	kW	14.0	14.0	14.0				3.3	15.0
		BTU/h	47800	47800	47800				11300	51200
	CURRENT	A	0.45×2	0.44×2	0.43×2	21.2	20.5	19.9	-	-
	INPUT POWER	W	55×2	55×2	55×2	4.540k	4.540k	4.540k	-	-
		TOTAL W		-		4.650k	4.650k	4.650k	840	5.650k
	ANNUAL CONSUMPTION	TOTAL kWh ※4		-		-	2325	-	-	-
	EER/EER CLASS	TOTAL(W/W) ※5/("A"~"G")	-	-	-	3.01	3.01 / B	3.01	3.93	2.65
	Erp ※6 Pdsign	kW	-	-	-	-	-	-		
	Erp ※6 SEER	(W/W)	-	-	-	-	-	-		
	Erp ※6 Annual consumption	kWh	-	-	-	-	-	-		
	Erp ※6 Class		-	-	-	-	-	-		
	POWER FACTOR	%	-	-	-	97	96	95	-	-
	NOISE INDOOR (H/M/L)	dB-A		39/35/31						
		Power Level dB		57/53/49						
	NOISE OUTDOOR (H/L)	dB-A					54/-			
		Power Level dB					71/-			
HEATING	CAPACITY	kW	16.0	16.0	16.0				4.1	18.0
		BTU/h	54600	54600	54600				14000	61400
	CURRENT	A	0.45×2	0.44×2	0.43×2	19.9	19.2	18.6	-	-
	INPUT POWER	W	55×2	55×2	55×2	4.250k	4.250k	4.250k	-	-
		TOTAL W		-		4.360k	4.360k	4.360k	900	5.930k
	COP/COP CLASS	TOTAL(W/W) ※5/("A"~"G")	-	-	-	3.67	3.67 / A	3.67	4.56	3.04
	Erp ※6 Pdsign	kW	-	-	-	-	-	-		
	Erp ※6 Tbivalen	°C	-	-	-	-	-	-		
	Erp ※6 SCOP	(W/W)	-	-	-	-	-	-		
	Erp ※6 Annual consumption	kWh	-	-	-	-	-	-		
	Erp ※6 Class		-	-	-	-	-	-		
	POWER FACTOR	%	-	-	-	97	96	95	-	-
	NOISE INDOOR (H/M/L)	dB-A		39/35/31			-		/	/
		Power Level dB		57/53/49			-			
	NOISE OUTDOOR (H/L)	dB-A		-			55/-		/	/
		Power Level dB		-			71/-			
EXTRA LOW TEMP	Total CAPACITY(kW)/INPUT POWER(W)/COP					-				
MAX CURRENT(A)/MAX INPUT POWER(W)			0.45×2/55×2	0.44×2/55×2	0.43×2/55×2	30.0/6.40k	30.0/6.62k	30.0/6.84k	/	
STARTING CURRENT(A)/COMP OUTPUT(W)			-	-	-	21.2/3.0k	20.5/3.0k	19.8/3.0k	/	
NETWORK IMPEDANCE (ΩMAX.)				-			-			
FM OUTPUT (W)				74			90×2		/	
MOISTURE REMOVAL VOLUME		L/h(Pt/h)	9.0	(4.5×2)	(18.9)		-			
External static pressure		Pa		-						
I/D AIR FLOW	COOL	m^3/min (ft^3/min)		[21/18/15.5 (742/636/547)]×2						
	HEAT	m^3/min (ft^3/min)		[21/18/15.5 (742/636/547)]×2						
O/D AIR FLOW	COOL	m^3/min (ft^3/min)				135		(4767)		
	HEAT	m^3/min (ft^3/min)				120		(4238)		
REFRIGERANT TYPE, AMOUNT g(oz)						R410A	3.40k	(119.9)	/	
PROD DIM	HEIGHT : H mm(inch)			235 (9-1/4)			1416 (55-3/4)		/	
	WIDTH : W mm(inch)			1275 (50-3/16)			940 (37-1/32)		/	
	DEPTH : D mm(inch)			690 (27-5/32)			340 (13-13/32)		/	
PACK DIM	HEIGHT : H mm			360			1556		/	
	WIDTH : W mm			1340			1055		/	
	DEPTH : D mm			820			485		/	
MASS	(NET) kg(lb)			33 (73)			98 (216)		/	
	(GROSS) kg(lb)			42 (93)			108 (238)		/	
LAYERS LIMIT (actually)				9 (10)			1 (2)			
Operation Condition		Cool O.D(DBT)		18°C ~ 32°C			-15°C ~ 46°C			
		Heat O.D(DBT)		16°C ~ 30°C			-20°C ~ 24°C			
PIPING	PIPE DIAMETER mm (inch)		(Liquid)ø9.52(3/8) (Gas)ø15.88(5/8)			(Liquid)ø9.52(3/8) (Gas)ø15.88(5/8)				
	CONNECT METHOD, STD LENGTH m (ft)		flared type, 5.0(16.4)			flared type, 5.0(16.4)				
	PIPE LENGTH RANGE m (ft)			5 ~ 75 (16.4 ~ 246.1)					~	~
	I/D&O/D HEIGHT DIFFERENCE m (ft)		15 (OD located lower) / 30 (OD located higher) (49.2/98.4)							
	ADD GAS AMOUNT g/m (oz/ft)			50 (0.538)						
	PIPE LENGTH FOR ADDITIONAL GAS m (ft)			30 (98.4)						

*1: In case it is necessary to indicate the air □ow volume in (l/s), the value in (m^3/min.) shall be multiplied by 16.7 and rounded down the decimal point.
*2: If the EUROVENT Certi□ed models can be operated under the □extra-low□temperature condition, -7□C dry bulb and -8□C wet-bulb temperatures with rated voltage 230 V shall be used.
*3: Network Impedance shall be applicable for EUROPE and CHINA models.
*4: The annual consumption is calculated by multiplying the input power at 230 V (400 V) by an average of 500 hours per year in cooling mode.
*5: EER and COP classification is at 230 V (400 V) only in accordance with EU directive 2002/31/EC.
*6: SEER and SCOP classification is at 230V(400V) only in accordance with EN-14825. For heating, SCOP indicates the value of only Average heating season, Other fiche data indicates in an attached sheet.

Single -Type

1-1. Unit Speci□cations

PE1

2. Ceiling Type S-100PT2E5A / U-100PE1E5A

INDOOR		MODEL	S-100PT2E5A							
PANEL		MODEL	-			-				
OUTDOOR		MODEL				U-100PE1E5A				
Branch pipe		MODEL	-							
PERFORMANCE TEST CONDITION			ISO5151 / EN14511 / EN14825 / EN12102							
POWER SUPPLY		ø, Hz	1ø 50Hz			1ø 50Hz				
		V	220	230	240	220	230	240	Min	Max
COOLING	CAPACITY	kW	10.0	10.0	10.0				3.3	12.5
		BTU/h	34100	34100	34100				11300	42700
	CURRENT	A	0.69	0.67	0.65	11.5	11.1	10.6	-	-
	INPUT POWER	W	80	80	80	2.450k	2.450k	2.450k	-	-
		TOTAL W		-		2.530k	2.530k	2.530k	840	3.850k
	ANNUAL CONSUMPTION	TOTAL kWh ※4		-		-	1265	-	-	-
	EER/EER CLASS	TOTAL(W/W)※5("A"~"G")	-	-	-	3.95	3.95 / A	3.95	3.93	3.25
	Erp ※6 Pdsign	kW	-	-	-	-	10.0	-		
	Erp ※6 SEER	(W/W)	-	-	-	-	6.7	-		
	Erp ※6 Annual consumption	kWh	-	-	-	-	523	-		
	Erp ※6 Class		-	-	-	-	A++	-		
	POWER FACTOR	%	-	-	-	97	96	96	-	-
	NOISE INDOOR (H/M/L)	dB-A		42/37/35						
		Power Level dB		60/55/53						
	NOISE OUTDOOR (H/L)	dB-A					52/-			
		Power Level dB					69/-			
HEATING	CAPACITY	kW	11.2	11.2	11.2				4.1	14.0
		BTU/h	38200	38200	38200				14000	47800
	CURRENT	A	0.69	0.67	0.65	11.8	11.4	11.0	-	-
	INPUT POWER	W	80	80	80	2.520k	2.520k	2.520k	-	-
		TOTAL W		-		2.600k	2.600k	2.600k	900	4.400k
	COP/COP CLASS	TOTAL(W/W)※5("A"~"G")	-	-	-	4.31	4.31 / A	4.31	4.56	3.18
	Erp ※6 Pdsign	kW	-	-	-	-	10.0	-		
	Erp ※6 Tbivalen	°C	-	-	-	-	-10	-		
	Erp ※6 SCOP	(W/W)	-	-	-	-	4.3	-		
	Erp ※6 Annual consumption	kWh	-	-	-	-	3256	-		
	Erp ※6 Class		-	-	-	-	A+	-		
	POWER FACTOR	%	-	-	-	97	96	95	-	-
	NOISE INDOOR (H/M/L)	dB-A		42/37/35			-		/	/
		Power Level dB		60/55/53			-			
	NOISE OUTDOOR (H/L)	dB-A		-			52/-		/	/
		Power Level dB		-			69/-			
EXTRA LOW TEMP	Total CAPACITY(kW)/INPUT POWER(W)/COP					-				
MAX CURRENT(A)/MAX INPUT POWER(W)			0.69/80	0.67/80	0.65/80	25.0/5.34k	25.0/5.52k	25.0/5.70k	/	
STARTING CURRENT(A)/COMP OUTPUT(W)			-	-	-	11.8/3.0k	11.4/3.0k	11.0/3.0k	/	
NETWORK IMPEDANCE (ΩMAX.)				-			-			
FM OUTPUT (W)				111			90×2		/	
MOISTURE REMOVAL VOLUME		L/h(Pt/h)	6.0		(12.6)		-			
External static pressure		Pa		-						
I/D AIR FLOW	COOL	m^3/min (ft^3/min)		30/25/23 (1059/883/812)						
	HEAT	m^3/min (ft^3/min)		30/25/23 (1059/883/812)						
O/D AIR FLOW	COOL	m^3/min (ft^3/min)				110		(3885)		
	HEAT	m^3/min (ft^3/min)				95		(3355)		
REFRIGERANT TYPE, AMOUNT g(oz)						R410A	3.40k	(119.9)	/	
PROD DIM	HEIGHT : H mm(inch)			235 (9-1/4)			1416 (55-3/4)		/	
	WIDTH : W mm(inch)			1590 (62-19/32)			940 (37-1/32)		/	
	DEPTH : D mm(inch)			690 (27-5/32)			340 (13-13/32)		/	
PACK DIM	HEIGHT : H mm			360			1556		/	
	WIDTH : W mm			1655			1055		/	
	DEPTH : D mm			820			485		/	
MASS	(NET) kg(lb)			40 (88)			98 (216)		/	
	(GROSS) kg(lb)			49 (108)			108 (238)		/	
LAYERS LIMIT (actually)				9 (10)			1 (2)			
Operation Condition		Cool O.D(DBT)		18°C ~ 32°C			-15°C ~ 46°C			
		Heat O.D(DBT)		16°C ~ 30°C			-20°C ~ 24°C			
PIPING	PIPE DIAMETER mm (inch)		(Liquid)ø9.52(3/8) (Gas)ø15.88(5/8)			(Liquid)ø9.52(3/8) (Gas)ø15.88(5/8)				
	CONNECT METHOD, STD LENGTH m (ft)		flared type, 5.0(16.4)			flared type, 5.0(16.4)				
	PIPE LENGTH RANGE m (ft)		5 ~ 75 (16.4 ~ 246.1)						~	~
	I/D&O/D HEIGHT DIFFERENCE m (ft)		15 (OD located lower) / 30 (OD located higher) (49.2/98.4)							
	ADD GAS AMOUNT g/m (oz/ft)		50 (0.538)							
	PIPE LENGTH FOR ADDITIONAL GAS m (ft)		30 (98.4)							

*1: In case it is necessary to indicate the air □ow volume in (l/s), the value in (m^3/min.) shall be multiplied by 16.7 and rounded down the decimal point.
*2: If the EUROVENT Certi□ed models can be operated under the □extra-low□temperature condition, -7□C dry bulb and -8□C wet-bulb temperatures with rated voltage 230 V shall be used.
*3: Network Impedance shall be applicable for EUROPE and CHINA models.
*4: The annual consumption is calculated by multiplying the input power at 230 V (400 V) by an average of 500 hours per year in cooling mode.
*5: EER and COP classification is at 230 V (400 V) only in accordance with EU directive 2002/31/EC.
*6: SEER and SCOP classification is at 230V(400V) only in accordance with EN-14825. For heating, SCOP indicates the value of only Average heating season, Other fiche data indicates in an attached sheet.

Single -Type

1-1. Unit Speci□cations

PE1

2. Ceiling Type S-125PT2E5A / U-125PE1E5A

INDOOR		MODEL	S-125PT2E5A							
PANEL		MODEL	-			-				
OUTDOOR		MODEL				U-125PE1E5A				
Branch pipe		MODEL	-							
PERFORMANCE TEST CONDITION			ISO5151 / EN14511 / EN12102							
POWER SUPPLY		ø, Hz	1ø 50Hz			1ø 50Hz				
		V	220	230	240	220	230	240	Min	Max
COOLING	CAPACITY	kW	12.5	12.5	12.5				3.3	14.0
		BTU/h	42700	42700	42700				11300	47800
	CURRENT	A	0.89	0.86	0.83	17.0	16.4	15.8	-	-
	INPUT POWER	W	110	110	110	3.620k	3.620k	3.620k	-	-
		TOTAL W		-		3.730k	3.730k	3.730k	840	4.860k
	ANNUAL CONSUMPTION	TOTAL kWh ※4		-		-	1865	-	-	-
	EER/EER CLASS	TOTAL(W/W) ※5/("A"~"G")	-	-	-	3.35	3.35 / A	3.35	3.93	2.88
	Erp ※6 Pdsign	kW	-	-	-	-	-	-		
	Erp ※6 SEER	(W/W)	-	-	-	-	-	-		
	Erp ※6 Annual consumption	kWh	-	-	-	-	-	-		
	Erp ※6 Class		-	-	-	-	-	-		
	POWER FACTOR	%	-	-	-	97	96	96	-	-
	NOISE INDOOR (H/M/L)	dB-A		46/40/36						
		Power Level dB		64/58/54						
	NOISE OUTDOOR (H/L)	dB-A					53/-			
		Power Level dB					70/-			
HEATING	CAPACITY	kW	14.0	14.0	14.0				4.1	16.0
		BTU/h	47800	47800	47800				14000	54600
	CURRENT	A	0.89	0.86	0.83	16.0	15.4	14.9	-	-
	INPUT POWER	W	110	110	110	3.400k	3.400k	3.400k	-	-
		TOTAL W		-		3.510k	3.510k	3.510k	900	5.210k
	COP/COP CLASS	TOTAL(W/W) ※5/("A"~"G")	-	-	-	3.99	3.99 / A	3.99	4.56	3.07
	Erp ※6 Pdsign	kW	-	-	-	-	-	-		
	Erp ※6 Tbivalen	°C	-	-	-	-	-	-		
	Erp ※6 SCOP	(W/W)	-	-	-	-	-	-		
	Erp ※6 Annual consumption	kWh	-	-	-	-	-	-		
	Erp ※6 Class		-	-	-	-	-	-		
	POWER FACTOR	%	-	-	-	97	96	95	-	-
	NOISE INDOOR (H/M/L)	dB-A		46/40/36			-		/	/
		Power Level dB		64/58/54			-			
	NOISE OUTDOOR (H/L)	dB-A		-			53/-		/	/
		Power Level dB		-			70/-			
EXTRA LOW TEMP	Total CAPACITY(kW)/INPUT POWER(W)/COP					-				
MAX CURRENT(A)/MAX INPUT POWER(W)			0.89/110	0.86/110	0.83/110	28.0/5.98k	28.0/6.18k	28.0/6.38k	/	
STARTING CURRENT(A)/COMP OUTPUT(W)			-	-	-	17.0/3.0k	16.4/3.0k	15.8/3.0k	/	
NETWORK IMPEDANCE (ΩMAX.)				-			-			
FM OUTPUT (W)				111			90×2		/	
MOISTURE REMOVAL VOLUME		L/h(Pt/h)	7.9		(16.6)		-			
External static pressure		Pa		-						
I/D AIR FLOW	COOL	m^3/min (ft^3/min)		34/28/24 (1201/989/848)						
	HEAT	m^3/min (ft^3/min)		34/28/24 (1201/989/848)						
O/D AIR FLOW	COOL	m^3/min (ft^3/min)				130		(4591)		
	HEAT	m^3/min (ft^3/min)				110		(3885)		
REFRIGERANT TYPE, AMOUNT g(oz)						R410A	3.40k	(119.9)	/	
PROD IM	HEIGHT : H mm(inch)			235 (9-1/4)			1416 (55-3/4)		/	
	WIDTH : W mm(inch)			1590 (62-19/32)			940 (37-1/32)		/	
	DEPTH : D mm(inch)			690 (27-5/32)			340 (13-13/32)		/	
PACK IM	HEIGHT : H mm			360			1556		/	
	WIDTH : W mm			1655			1055		/	
	DEPTH : D mm			820			485		/	
MASS	(NET) kg(lb)			40 (88)			98 (216)		/	
	(GROSS) kg(lb)			49 (108)			108 (238)		/	
LAYERS LIMIT (actually)				9 (10)			1 (2)			
Operation Condition		Cool O.D(DBT)		18°C ~ 32°C			-15°C ~ 46°C			
		Heat O.D(DBT)		16°C ~ 30°C			-20°C ~ 24°C			
PIPING	PIPE DIAMETER mm (inch)		(Liquid)ø9.52(3/8) (Gas)ø15.88(5/8)			(Liquid)ø9.52(3/8) (Gas)ø15.88(5/8)				
	CONNECT METHOD, STD LENGTH m (ft)		flared type, 5.0(16.4)			flared type, 5.0(16.4)				
	PIPE LENGTH RANGE m (ft)			5 ~ 75 (16.4 ~ 246.1)					~	~
	I/D&O/D HEIGHT DIFFERENCE m (ft)		15 (OD located lower) / 30 (OD located higher) (49.2/98.4)							
	ADD GAS AMOUNT g/m (oz/ft)			50 (0.538)						
	PIPE LENGTH FOR ADDITIONAL GAS m (ft)			30 (98.4)						

*1: In case it is necessary to indicate the air □ow volume in (l/s), the value in (m^3/min.) shall be multiplied by 16.7 and rounded down the decimal point.
*2: If the EUROVENT Certi□ed models can be operated under the □extra-low□temperature condition, -7□C dry bulb and -8□C wet-bulb temperatures with rated voltage 230 V shall be used.
*3: Network Impedance shall be applicable for EUROPE and CHINA models.
*4: The annual consumption is calculated by multiplying the input power at 230 V (400 V) by an average of 500 hours per year in cooling mode.
*5: EER and COP classification is at 230 V (400 V) only in accordance with EU directive 2002/31/EC.
*6: SEER and SCOP classification is at 230V(400V) only in accordance with EN-14825. For heating, SCOP indicates the value of only Average heating season, Other fiche data indicates in an attached sheet.

Single -Type

1-1. Unit Speci□cations

PE1

2. Ceiling Type S-140PT2E5A / U-140PE1E5A

INDOOR		MODEL	S-140PT2E5A							
PANEL		MODEL	-			-				
OUTDOOR		MODEL				U-140PE1E5A				
Branch pipe		MODEL	-							
PERFORMANCE TEST CONDITION			ISO5151 / EN14511 / EN12102							
POWER SUPPLY		ø, Hz	1ø 50Hz			1ø 50Hz				
		V	220	230	240	220	230	240	Min	Max
COOLING	CAPACITY	kW	14.0	14.0	14.0				3.3	15.0
		BTU/h	47800	47800	47800				11300	51200
	CURRENT	A	0.94	0.91	0.88	21.2	20.5	19.8	-	-
	INPUT POWER	W	120	120	120	4.530k	4.530k	4.530k	-	-
		TOTAL W		-		4.650k	4.650k	4.650k	840	5.650k
	ANNUAL CONSUMPTION	TOTAL kWh ※4		-		-	2325	-	-	-
	EER/EER CLASS	TOTAL(W/W)※5("A"~"G")	-	-	-	3.01	3.01 / B	3.01	3.93	2.65
	Erp ※6 Pdsign	kW	-	-	-	-	-	-		
	Erp ※6 SEER	(W/W)	-	-	-	-	-	-		
	Erp ※6 Annual consumption	kWh	-	-	-	-	-	-		
	Erp ※6 Class		-	-	-	-	-	-		
	POWER FACTOR	%	-	-	-	97	96	96	-	-
	NOISE INDOOR (H/M/L)	dB-A		47/41/37						
		Power Level dB		65/59/55						
	NOISE OUTDOOR (H/L)	dB-A					54/-			
		Power Level dB					71/-			
HEATING	CAPACITY	kW	16.0	16.0	16.0				4.1	18.0
		BTU/h	54600	54600	54600				14000	61400
	CURRENT	A	0.94	0.91	0.88	19.8	19.2	18.5	-	-
	INPUT POWER	W	120	120	120	4.240k	4.240k	4.240k	-	-
		TOTAL W		-		4.360k	4.360k	4.360k	900	5.930k
	COP/COP CLASS	TOTAL(W/W)※5("A"~"G")	-	-	-	3.67	3.67 / A	3.67	4.56	3.04
	Erp ※6 Pdsign	kW	-	-	-	-	-	-		
	Erp ※6 Tbivalen	°C	-	-	-	-	-	-		
	Erp ※6 SCOP	(W/W)	-	-	-	-	-	-		
	Erp ※6 Annual consumption	kWh	-	-	-	-	-	-		
	Erp ※6 Class		-	-	-	-	-	-		
	POWER FACTOR	%	-	-	-	97	96	95	-	-
	NOISE INDOOR (H/M/L)	dB-A		47/41/37			-		/	/
		Power Level dB		65/59/55			-			
	NOISE OUTDOOR (H/L)	dB-A		-			55/-		/	/
		Power Level dB		-			71/-			
EXTRA LOW TEMP	Total CAPACITY(kW)/INPUT POWER(W)/COP					-				
MAX CURRENT(A)/MAX INPUT POWER(W)			0.94/120	0.91/120	0.88/120	30.0/6.40k	30.0/6.62k	30.0/6.84k	/	
STARTING CURRENT(A)/COMP OUTPUT(W)			-	-	-	21.1/2.0k	20.5/2.0k	19.8/2.0k	/	
NETWORK IMPEDANCE (ΩMAX.)				-			-			
FM OUTPUT (W)				111			90×2		/	
MOISTURE REMOVAL VOLUME		L/h(Pt/h)	9.0		(18.9)		-			
External static pressure		Pa		-						
I/D AIR FLOW	COOL	m^3/min (ft^3/min)		35/29/25 (1236/1024/883)						
	HEAT	m^3/min (ft^3/min)		35/29/25 (1236/1024/883)						
O/D AIR FLOW	COOL	m^3/min (ft^3/min)				135		(4767)		
	HEAT	m^3/min (ft^3/min)				120		(4238)		
REFRIGERANT TYPE, AMOUNT g(oz)						R410A	3.40k	(119.9)	/	
PROD	HEIGHT : H mm(inch)			235 (9-1/4)			1416 (55-3/4)		/	
	WIDTH : W mm(inch)			1590 (62-19/32)			940 (37-1/32)		/	
	DEPTH : D mm(inch)			690 (27-5/32)			340 (13-13/32)		/	
PACK	HEIGHT : H mm			360			1556		/	
	WIDTH : W mm			1655			1055		/	
	DEPTH : D mm			820			485		/	
MASS	(NET) kg(lb)			40 (88)			98 (216)		/	
	(GROSS) kg(lb)			49 (108)			108 (238)		/	
LAYERS LIMIT (actually)				9 (10)			1 (2)			
Operation Condition		Cool O.D(DBT)		18°C ~ 32°C			-15°C ~ 46°C			
		Heat O.D(DBT)		16°C ~ 30°C			-20°C ~ 24°C			
PIPING	PIPE DIAMETER mm (inch)		(Liquid)ø9.52(3/8) (Gas)ø15.88(5/8)			(Liquid)ø9.52(3/8) (Gas)ø15.88(5/8)				
	CONNECT METHOD, STD LENGTH m (ft)		flared type, 5.0(16.4)			flared type, 5.0(16.4)				
	PIPE LENGTH RANGE m (ft)		5 ~ 75 (16.4 ~ 246.1)						~	~
	I/D&O/D HEIGHT DIFFERENCE m (ft)		15 (OD located lower) / 30 (OD located higher) (49.2/98.4)							
	ADD GAS AMOUNT g/m (oz/ft)		50 (0.538)							
	PIPE LENGTH FOR ADDITIONAL GAS m (ft)		30 (98.4)							

*1: In case it is necessary to indicate the air □ow volume in (l/s), the value in (m^3/min.) shall be multiplied by 16.7 and rounded down the decimal point.
*2: If the EUROVENT Certi□ed models can be operated under the □extra-low□temperature condition, -7□C dry bulb and -8□C wet-bulb temperatures with rated voltage 230 V shall be used.
*3: Network Impedance shall be applicable for EUROPE and CHINA models.
*4: The annual consumption is calculated by multiplying the input power at 230 V (400 V) by an average of 500 hours per year in cooling mode.
*5: EER and COP classification is at 230 V (400 V) only in accordance with EU directive 2002/31/EC.
*6: SEER and SCOP classification is at 230V(400V) only in accordance with EN-14825. For heating, SCOP indicates the value of only Average heating season, Other fiche data indicates in an attached sheet.

Simultaneous (Twin) -Type

1-1. Unit Speci□cations

PE1

2. Ceiling Type S-36PT2E5A×2 / U-71PE1E8A

INDOOR		MODEL	S-36PT2E5A×2							
PANEL		MODEL	-			-				
OUTDOOR		MODEL				U-71PE1E8A				
Branch pipe		MODEL	CZ-P155BK1							
PERFORMANCE TEST CONDITION			ISO5151 / EN14511 / EN14825 / EN12102							
POWER SUPPLY		ø, Hz	1ø 50Hz			3ø 50Hz				
		V	220	230	240	380	400	415	Min	Max
COOLING	CAPACITY	kW	7.1	7.1	7.1				2.5	8.0
		BTU/h	24200	24200	24200				8500	27300
	CURRENT	A	0.37×2	0.36×2	0.35×2	3.00	2.90	2.80	-	-
	INPUT POWER	W	35×2	35×2	35×2	1.875k	1.875k	1.875k	-	-
		TOTAL W		-		1.945k	1.945k	1.945k	450	2.780k
	ANNUAL CONSUMPTION	TOTAL kWh ※4		-		-	973	-	-	-
	EER/EER CLASS	TOTAL(W/W) ※5("A"~"G")	-	-	-	3.65	3.65 / A	3.65	5.56	2.88
	Erp ※6 Pdsign	kW	-	-	-	-	7.1	-		
	Erp ※6 SEER	(W/W)	-	-	-	-	5.9	-		
	Erp ※6 Annual consumption	kWh	-	-	-	-	421	-		
	Erp ※6 Class		-	-	-	-	A+	-		
	POWER FACTOR	%	-	-	-	95	93	93	-	-
	NOISE INDOOR (H/M/L)	dB-A		36/32/29						
		Power Level dB		54/50/47						
	NOISE OUTDOOR (H/L)	dB-A					48/-			
		Power Level dB					65/-			
HEATING	CAPACITY	kW	8.0	8.0	8.0				2.0	9.0
		BTU/h	27300	27300	27300				6800	30700
	CURRENT	A	0.37×2	0.36×2	0.35×2	3.00	2.90	2.80	-	-
	INPUT POWER	W	35×2	35×2	35×2	1.875k	1.875k	1.875k	-	-
		TOTAL W		-		1.945k	1.945k	1.945k	400	2.900k
	COP/COP CLASS	TOTAL(W/W) ※5("A"~"G")	-	-	-	4.11	4.11 / A	4.11	5.00	3.10
	Erp ※6 Pdsign	kW	-	-	-	-	7.1	-		
	Erp ※6 Tbivalen	°C	-	-	-	-	-9	-		
	Erp ※6 SCOP	(W/W)	-	-	-	-	4.0	-		
	Erp ※6 Annual consumption	kWh	-	-	-	-	2485	-		
	Erp ※6 Class		-	-	-	-	A+	-		
	POWER FACTOR	%	-	-	-	95	93	93	-	-
	NOISE INDOOR (H/M/L)	dB-A		36/32/29			-		/	/
		Power Level dB		54/50/47			-			
	NOISE OUTDOOR (H/L)	dB-A		-			50/-		/	/
		Power Level dB		-			67/-			
EXTRA LOW TEMP	Total CAPACITY(kW)/INPUT POWER(W)/COP					-				
MAX CURRENT(A)/MAX INPUT POWER(W)			0.37×2/35×2	0.36×2/35×2	0.35×2/35×2	7.0/4.15k	7.0/4.36k	7.0/4.53k	/	
STARTING CURRENT(A)/COMP OUTPUT(W)			-	-	-	3.00/3.0k	2.90/3.0k	2.80/3.0k	/	
NETWORK IMPEDANCE (ΩMAX.)				-			-			
FM OUTPUT (W)				43			90		/	
MOISTURE REMOVAL VOLUME		L/h(Pt/h)	4.2	(2.1×2)	(8.8)		-			
External static pressure		Pa		-						
I/D AIR FLOW	COOL	m^3/min (ft^3/min)		[14/12/10.5 (494/424/371)]×2						
	HEAT	m^3/min (ft^3/min)		[14/12/10.5 (494/424/371)]×2						
O/D AIR FLOW	COOL	m^3/min (ft^3/min)				60		(2119)		
	HEAT	m^3/min (ft^3/min)				60		(2119)		
REFRIGERANT TYPE, AMOUNT g(oz)						R410A	2.35k	(82.9)	/	
PROD DIM	HEIGHT : H mm(inch)			235 (9-1/4)			996 (39-7/32)		/	
	WIDTH : W mm(inch)			960 (37-25/32)			940 (37-1/32)		/	
	DEPTH : D mm(inch)			690 (27-5/32)			340 (13-13/32)		/	
PACK DIM	HEIGHT : H mm			360			1136		/	
	WIDTH : W mm			1025			1055		/	
	DEPTH : D mm			820			485		/	
MASS	(NET) kg(lb)			27 (60)			71 (157)		/	
	(GROSS) kg(lb)			34 (75)			79 (174)		/	
LAYERS LIMIT (actually)				9 (10)			2 (3)			
Operation Condition		Cool O.D(DBT)		18°C ~ 32°C			-15°C ~ 46°C			
		Heat O.D(DBT)		16°C ~ 30°C			-20°C ~ 24°C			
PIPING	PIPE DIAMETER mm (inch)		(Liquid)ø6.35(1/4) (Gas)ø12.7(1/2)			(Liquid)ø9.52(3/8) (Gas)ø15.88(5/8)				
	CONNECT METHOD, STD LENGTH m (ft)		flared type, 5.0(16.4)			flared type, 5.0(16.4)				
	PIPE LENGTH RANGE m (ft)			5 ~ 50 (16.4 ~ 164)					~	~
	I/D&O/D HEIGHT DIFFERENCE m (ft)		15 (OD located lower) / 30 (OD located higher) (49.2/98.4)							
	ADD GAS AMOUNT g/m (oz/ft)			50 (0.538)						
	PIPE LENGTH FOR ADDITIONAL GAS m (ft)			30 (98.4)						

*1: In case it is necessary to indicate the air □ow volume in (l/s), the value in (m^3/min.) shall be multiplied by 16.7 and rounded down the decimal point.
*2: If the EUROVENT Certi□ed models can be operated under the □extra-low□temperature condition, -7□C dry bulb and -8□C wet-bulb temperatures with rated voltage 230 V shall be used.
*3: Network Impedance shall be applicable for EUROPE and CHINA models.
*4: The annual consumption is calculated by multiplying the input power at 230 V (400 V) by an average of 500 hours per year in cooling mode.
*5: EER and COP classification is at 230 V (400 V) only in accordance with EU directive 2002/31/EC.
*6: SEER and SCOP classification is at 230V(400V) only in accordance with EN-14825. For heating, SCOP indicates the value of only Average heating season, Other fiche data indicates in an attached sheet.

Simultaneous (Triple) -Type

1-1. Unit Speci□cations

PE1

2. Ceiling Type S-36PT2E5A×3 / U-100PE1E8A

INDOOR		MODEL	S-36PT2E5A×3							
PANEL		MODEL	-			-				
OUTDOOR		MODEL				U-100PE1E8A				
Branch pipe		MODEL	CZ-P3HPC2BM							
PERFORMANCE TEST CONDITION			ISO5151 / EN14511 / EN14825 / EN12102							
POWER SUPPLY		ø, Hz	1ø 50Hz			3ø 50Hz				
		V	220	230	240	380	400	415	Min	Max
COOLING	CAPACITY	kW	10.0	10.0	10.0				3.3	12.5
		BTU/h	34100	34100	34100				11300	42700
	CURRENT	A	0.37×3	0.36×3	0.35×3	3.95	3.75	3.65	-	-
	INPUT POWER	W	35×3	35×3	35×3	2.450k	2.450k	2.450k	-	-
		TOTAL W		-		2.555k	2.555k	2.555k	840	3.850k
	ANNUAL CONSUMPTION	TOTAL kWh ※4		-		-	1278	-	-	-
	EER/EER CLASS	TOTAL(W/W)※5("A"~"G")	-	-	-	3.91	3.91 / A	3.91	3.93	3.25
	Erp ※6 Pdsign	kW	-	-	-	-	10.0	-		
	Erp ※6 SEER	(W/W)	-	-	-	-	6.4	-		
	Erp ※6 Annual consumption	kWh	-	-	-	-	547	-		
	Erp ※6 Class		-	-	-	-	A++	-		
	POWER FACTOR	%	-	-	-	94	94	93	-	-
	NOISE INDOOR (H/M/L)	dB-A		36/32/29						
		Power Level dB		54/50/47						
	NOISE OUTDOOR (H/L)	dB-A					52/-			
		Power Level dB					69/-			
HEATING	CAPACITY	kW	11.2	11.2	11.2				4.1	14.0
		BTU/h	38200	38200	38200				14000	47800
	CURRENT	A	0.37×3	0.36×3	0.35×3	4.05	3.85	3.75	-	-
	INPUT POWER	W	35×3	35×3	35×3	2.520k	2.520k	2.520k	-	-
		TOTAL W		-		2.625k	2.625k	2.625k	900	4.400k
	COP/COP CLASS	TOTAL(W/W)※5("A"~"G")	-	-	-	4.27	4.27 / A	4.27	4.56	3.18
	Erp ※6 Pdsign	kW	-	-	-	-	10.0	-		
	Erp ※6 Tbivalen	°C	-	-	-	-	-10	-		
	Erp ※6 SCOP	(W/W)	-	-	-	-	4.3	-		
	Erp ※6 Annual consumption	kWh	-	-	-	-	3256	-		
	Erp ※6 Class		-	-	-	-	A+	-		
	POWER FACTOR	%	-	-	-	95	94	93	-	-
	NOISE INDOOR (H/M/L)	dB-A		36/32/29			-		/	/
		Power Level dB		54/50/47			-			
	NOISE OUTDOOR (H/L)	dB-A		-			52/-		/	/
		Power Level dB		-			69/-			
EXTRA LOW TEMP	Total CAPACITY(kW)/INPUT POWER(W)/COP					-				
MAX CURRENT(A)/MAX INPUT POWER(W)			0.37×3/35×3	0.36×3/35×3	0.35×3/35×3	9.0/5.63k	9.0/5.86k	9.0/6.02k	/	
STARTING CURRENT(A)/COMP OUTPUT(W)			-	-	-	4.05/3.0k	3.85/3.0k	3.75/3.0k	/	
NETWORK IMPEDANCE (ΩMAX.)				-			-			
FM OUTPUT (W)				43			90×2		/	
MOISTURE REMOVAL VOLUME		L/h(Pt/h)	6.0	(2.0×3)	(12.6)		-			
External static pressure		Pa		-						
I/D AIR FLOW	COOL	m^3/min (ft^3/min)		[14/12/10.5 (494/424/371)]×3						
	HEAT	m^3/min (ft^3/min)		[14/12/10.5 (494/424/371)]×3						
O/D AIR FLOW	COOL	m^3/min (ft^3/min)				110		(3885)		
	HEAT	m^3/min (ft^3/min)				95		(3355)		
REFRIGERANT TYPE, AMOUNT g(oz)						R410A	3.40k	(119.9)	/	
PROD IM	HEIGHT : H mm(inch)			235 (9-1/4)			1416 (55-3/4)		/	
	WIDTH : W mm(inch)			960 (37-25/32)			940 (37-1/32)		/	
	DEPTH : D mm(inch)			690 (27-5/32)			340 (13-13/32)		/	
PAC DIM	HEIGHT : H mm			360			1556		/	
	WIDTH : W mm			1025			1055		/	
	DEPTH : D mm			820			485		/	
MASS	(NET) kg(lb)			27 (60)			98 (216)		/	
	(GROSS) kg(lb)			34 (75)			108 (238)		/	
LAYERS LIMIT (actually)				9 (10)			1 (2)			
Operation Condition		Cool O.D(DBT)		18°C ~ 32°C			-15°C ~ 46°C			
		Heat O.D(DBT)		16°C ~ 30°C			-20°C ~ 24°C			
PIPING	PIPE DIAMETER mm (inch)		(Liquid)ø6.35(1/4) (Gas)ø12.7(1/2)			(Liquid)ø9.52(3/8) (Gas)ø15.88(5/8)				
	CONNECT METHOD, STD LENGTH m (ft)		flared type, 5.0(16.4)			flared type, 5.0(16.4)				
	PIPE LENGTH RANGE m (ft)			5 ~ 75 (16.4 ~ 246.1)					~	~
	I/D&O/D HEIGHT DIFFERENCE m (ft)		15 (OD located lower) / 30 (OD located higher) (49.2/98.4)							
	ADD GAS AMOUNT g/m (oz/ft)			50 (0.538)						
	PIPE LENGTH FOR ADDITIONAL GAS m (ft)			20 (65.6)						

*1: In case it is necessary to indicate the air □ow volume in (l/s), the value in (m^3/min.) shall be multiplied by 16.7 and rounded down the decimal point.
*2: If the EUROVENT Certi□ed models can be operated under the □extra-low□temperature condition, -7□C dry bulb and -8□C wet-bulb temperatures with rated voltage 230 V shall be used.
*3: Network Impedance shall be applicable for EUROPE and CHINA models.
*4: The annual consumption is calculated by multiplying the input power at 230 V (400 V) by an average of 500 hours per year in cooling mode.
*5: EER and COP classification is at 230 V (400 V) only in accordance with EU directive 2002/31/EC.
*6: SEER and SCOP classification is at 230V(400V) only in accordance with EN-14825. For heating, SCOP indicates the value of only Average heating season, Other fiche data indicates in an attached sheet.

Simultaneous (Double-Twin) -Type

1-1. Unit Speci□cations

PE1

2. Ceiling Type S-36PT2E5A×4 / U-125PE1E8A

INDOOR		MODEL	S-36PT2E5A×4							
PANEL		MODEL	-			-				
OUTDOOR		MODEL				U-125PE1E8A				
Branch pipe		MODEL	CZ-P155BK1							
PERFORMANCE TEST CONDITION			ISO5151 / EN14511 / EN12102							
POWER SUPPLY		ø, Hz	1ø 50Hz			3ø 50Hz				
		V	220	230	240	380	400	415	Min	Max
COOLING	CAPACITY	kW	12.5	12.5	12.5				3.3	14.0
		BTU/h	42700	42700	42700				11300	47800
	CURRENT	A	0.37×4	0.36×4	0.35×4	5.85	5.55	5.35	-	-
	INPUT POWER	W	35×4	35×4	35×4	3.620k	3.620k	3.620k	-	-
		TOTAL W		-		3.760k	3.760k	3.760k	840	4.860k
	ANNUAL CONSUMPTION	TOTAL kWh ※4		-		-	1880	-	-	-
	EER/EER CLASS	TOTAL(W/W)※5("A"~"G")	-	-	-	3.32	3.32 / A	3.32	3.93	2.88
	Erp ※6 Pdsign	kW	-	-	-	-	-	-		
	Erp ※6 SEER	(W/W)	-	-	-	-	-	-		
	Erp ※6 Annual consumption	kWh	-	-	-	-	-	-		
	Erp ※6 Class		-	-	-	-	-	-		
	POWER FACTOR	%	-	-	-	94	94	94	-	-
	NOISE INDOOR (H/M/L)	dB-A		36/32/29						
		Power Level dB		54/50/47						
	NOISE OUTDOOR (H/L)	dB-A					53/-			
		Power Level dB					70/-			
HEATING	CAPACITY	kW	14.0	14.0	14.0				4.1	16.0
		BTU/h	47800	47800	47800				14000	54600
	CURRENT	A	0.37×4	0.36×4	0.35×4	5.50	5.20	5.05	-	-
	INPUT POWER	W	35×4	35×4	35×4	3.400k	3.400k	3.400k	-	-
		TOTAL W		-		3.540k	3.540k	3.540k	900	5.210k
	COP/COP CLASS	TOTAL(W/W)※5("A"~"G")	-	-	-	3.95	3.95 / A	3.95	4.56	3.07
	Erp ※6 Pdsign	kW	-	-	-	-	-	-		
	Erp ※6 Tbivalen	°C	-	-	-	-	-	-		
	Erp ※6 SCOP	(W/W)	-	-	-	-	-	-		
	Erp ※6 Annual consumption	kWh	-	-	-	-	-	-		
	Erp ※6 Class		-	-	-	-	-	-		
	POWER FACTOR	%	-	-	-	94	94	94	-	-
	NOISE INDOOR (H/M/L)	dB-A		36/32/29			-		/	/
		Power Level dB		54/50/47			-			
	NOISE OUTDOOR (H/L)	dB-A		-			53/-		/	/
		Power Level dB		-			70/-			
EXTRA LOW TEMP	Total CAPACITY(kW)/INPUT POWER(W)/COP					-				
MAX CURRENT(A)/MAX INPUT POWER(W)			0.37×4/35×4	0.36×4/35×4	0.35×4/35×4	10.0/6.19k	10.0/6.51k	10.0/6.75k	/	
STARTING CURRENT(A)/COMP OUTPUT(W)			-	-	-	5.85/3.0k	5.55/3.0k	5.35/3.0k	/	
NETWORK IMPEDANCE (ΩMAX.)				-			-			
FM OUTPUT (W)				43			90×2		/	
MOISTURE REMOVAL VOLUME		L/h(Pt/h)	7.9	(1.975×4)	(16.6)		-			
External static pressure		Pa		-						
I/D AIR FLOW	COOL	m^3/min (ft^3/min)		[14/12/10.5 (494/424/371)]×4						
	HEAT	m^3/min (ft^3/min)		[14/12/10.5 (494/424/371)]×4						
O/D AIR FLOW	COOL	m^3/min (ft^3/min)				130		(4591)		
	HEAT	m^3/min (ft^3/min)				110		(3885)		
REFRIGERANT TYPE, AMOUNT g(oz)						R410A	3.40k	(119.9)	/	
PROD DIM	HEIGHT : H mm(inch)			235 (9-1/4)			1416 (55-3/4)		/	
	WIDTH : W mm(inch)			960 (37-25/32)			940 (37-1/32)		/	
	DEPTH : D mm(inch)			690 (27-5/32)			340 (13-13/32)		/	
PACK DIM	HEIGHT : H mm			360			1556		/	
	WIDTH : W mm			1025			1055		/	
	DEPTH : D mm			820			485		/	
MASS	(NET) kg(lb)			27 (60)			98 (216)		/	
	(GROSS) kg(lb)			34 (75)			108 (238)		/	
LAYERS LIMIT (actually)				9 (10)			1 (2)			
Operation Condition		Cool O.D(DBT)		18°C ~ 32°C			-15°C ~ 46°C			
		Heat O.D(DBT)		16°C ~ 30°C			-20°C ~ 24°C			
PIPING	PIPE DIAMETER mm (inch)		(Liquid)ø6.35(1/4) (Gas)ø12.7(1/2)			(Liquid)ø9.52(3/8) (Gas)ø15.88(5/8)				
	CONNECT METHOD, STD LENGTH m (ft)		flared type, 5.0(16.4)			flared type, 5.0(16.4)				
	PIPE LENGTH RANGE m (ft)			5 ~ 75 (16.4 ~ 246.1)					~	~
	I/D&O/D HEIGHT DIFFERENCE m (ft)		15 (OD located lower) / 30 (OD located higher) (49.2/98.4)							
	ADD GAS AMOUNT g/m (oz/ft)			50 (0.538)						
	PIPE LENGTH FOR ADDITIONAL GAS m (ft)			20 (65.6)						

*1: In case it is necessary to indicate the air □ow volume in (l/s), the value in (m^3/min.) shall be multiplied by 16.7 and rounded down the decimal point.
*2: If the EUROVENT Certi□ed models can be operated under the □extra-low□temperature condition, -7□C dry bulb and -8□C wet-bulb temperatures with rated voltage 230 V shall be used.
*3: Network Impedance shall be applicable for EUROPE and CHINA models.
*4: The annual consumption is calculated by multiplying the input power at 230 V (400 V) by an average of 500 hours per year in cooling mode.
*5: EER and COP classification is at 230 V (400 V) only in accordance with EU directive 2002/31/EC.
*6: SEER and SCOP classification is at 230V(400V) only in accordance with EN-14825. For heating, SCOP indicates the value of only Average heating season, Other fiche data indicates in an attached sheet.

Simultaneous (Triple) -Type

1-1. Unit Speci□cations

PE1

2. Ceiling Type S-45PT2E5A×3 / U-125PE1E8A

INDOOR		MODEL	S-45PT2E5A×3							
PANEL		MODEL	-			-				
OUTDOOR		MODEL				U-125PE1E8A				
Branch pipe		MODEL	CZ-P3HPC2BM							
PERFORMANCE TEST CONDITION			ISO5151 / EN14511 / EN12102							
POWER SUPPLY		ø, Hz	1ø 50Hz			3ø 50Hz				
		V	220	230	240	380	400	415	Min	Max
COOLING	CAPACITY	kW	12.5	12.5	12.5				3.3	14.0
		BTU/h	42700	42700	42700				11300	47800
	CURRENT	A	0.39×3	0.38×3	0.37×3	5.85	5.55	5.53	-	-
	INPUT POWER	W	40×3	40×3	40×3	3.620k	3.620k	3.620k	-	-
		TOTAL W		-		3.740k	3.740k	3.740k	840	4.860k
	ANNUAL CONSUMPTION	TOTAL kWh ※4		-		-	1870	-	-	-
	EER/EER CLASS	TOTAL(W/W)※5("A"~"G")	-	-	-	3.34	3.34 / A	3.34	3.93	2.88
	Erp ※6 Pdsign	kW	-	-	-	-	-	-		
	Erp ※6 SEER	(W/W)	-	-	-	-	-	-		
	Erp ※6 Annual consumption	kWh	-	-	-	-	-	-		
	Erp ※6 Class		-	-	-	-	-	-		
	POWER FACTOR	%	-	-	-	94	94	94	-	-
	NOISE INDOOR (H/M/L)	dB-A		37/33/29						
		Power Level dB		55/51/47						
	NOISE OUTDOOR (H/L)	dB-A					53/-			
		Power Level dB					70/-			
HEATING	CAPACITY	kW	14.0	14.0	14.0				4.1	16.0
		BTU/h	47800	47800	47800				14000	54600
	CURRENT	A	0.39×3	0.38×3	0.37×3	5.50	5.20	5.05	-	-
	INPUT POWER	W	40×3	40×3	40×3	3.400k	3.400k	3.400k	-	-
		TOTAL W		-		3.520k	3.520k	3.520k	900	5.210k
	COP/COP CLASS	TOTAL(W/W)※5("A"~"G")	-	-	-	3.98	3.98 / A	3.98	4.56	3.07
	Erp ※6 Pdsign	kW	-	-	-	-	-	-		
	Erp ※6 Tbivalen	°C	-	-	-	-	-	-		
	Erp ※6 SCOP	(W/W)	-	-	-	-	-	-		
	Erp ※6 Annual consumption	kWh	-	-	-	-	-	-		
	Erp ※6 Class		-	-	-	-	-	-		
	POWER FACTOR	%	-	-	-	94	94	94	-	-
	NOISE INDOOR (H/M/L)	dB-A		37/33/29			-		/	/
		Power Level dB		55/51/47			-			
	NOISE OUTDOOR (H/L)	dB-A		-			53/-		/	/
		Power Level dB		-			70/-			
EXTRA LOW TEMP	Total CAPACITY(kW)/INPUT POWER(W)/COP					-				
MAX CURRENT(A)/MAX INPUT POWER(W)			0.39×3/40×3	0.38×3/40×3	0.37×3/40×3	10.0/6.19k	10.0/6.51k	10.0/6.75k	/	
STARTING CURRENT(A)/COMP OUTPUT(W)			-	-	-	5.85/3.0k	5.55/3.0k	5.35/3.0k	/	
NETWORK IMPEDANCE (ΩMAX.)				-			-			
FM OUTPUT (W)				43			90×2		/	
MOISTURE REMOVAL VOLUME		L/h(Pt/h)	7.9	(2.63×3)	(16.6)		-			
External static pressure		Pa		-						
I/D AIR FLOW	COOL	m^3/min (ft^3/min)		[15/12.5/10.5 (530/441/371)]×3						
	HEAT	m^3/min (ft^3/min)		[15/12.5/10.5 (530/441/371)]×3						
O/D AIR FLOW	COOL	m^3/min (ft^3/min)				130		(4591)		
	HEAT	m^3/min (ft^3/min)				110		(3885)		
REFRIGERANT TYPE, AMOUNT g(oz)						R410A	3.40k	(119.9)	/	
PROD IM	HEIGHT : H mm(inch)			235 (9-1/4)			1416 (55-3/4)		/	
	WIDTH : W mm(inch)			960 (37-25/32)			940 (37-1/32)		/	
	DEPTH : D mm(inch)			690 (27-5/32)			340 (13-13/32)		/	
PACK IM	HEIGHT : H mm			360			1556		/	
	WIDTH : W mm			1025			1055		/	
	DEPTH : D mm			820			485		/	
MASS	(NET) kg(lb)			27 (60)			98 (216)		/	
	(GROSS) kg(lb)			34 (75)			108 (238)		/	
LAYERS LIMIT (actually)				9 (10)			1 (2)			
Operation Condition		Cool O.D(DBT)		18°C ~ 32°C			-15°C ~ 46°C			
		Heat O.D(DBT)		16°C ~ 30°C			-20°C ~ 24°C			
PIPING	PIPE DIAMETER mm (inch)		(Liquid)ø6.35(1/4) (Gas)ø12.7(1/2)			(Liquid)ø9.52(3/8) (Gas)ø15.88(5/8)				
	CONNECT METHOD, STD LENGTH m (ft)		flared type, 5.0(16.4)			flared type, 5.0(16.4)				
	PIPE LENGTH RANGE m (ft)			5 ~ 75 (16.4 ~ 246.1)					~	~
	I/D&O/D HEIGHT DIFFERENCE m (ft)		15 (OD located lower) / 30 (OD located higher) (49.2/98.4)							
	ADD GAS AMOUNT g/m (oz/ft)			50 (0.538)						
	PIPE LENGTH FOR ADDITIONAL GAS m (ft)			20 (65.6)						

*1: In case it is necessary to indicate the air □ow volume in (l/s), the value in (m^3/min.) shall be multiplied by 16.7 and rounded down the decimal point.
*2: If the EUROVENT Certi□ed models can be operated under the □extra-low□temperature condition, -7□C dry bulb and -8□C wet-bulb temperatures with rated voltage 230 V shall be used.
*3: Network Impedance shall be applicable for EUROPE and CHINA models.
*4: The annual consumption is calculated by multiplying the input power at 230 V (400 V) by an average of 500 hours per year in cooling mode.
*5: EER and COP classification is at 230 V (400 V) only in accordance with EU directive 2002/31/EC.
*6: SEER and SCOP classification is at 230V(400V) only in accordance with EN-14825. For heating, SCOP indicates the value of only Average heating season, Other fiche data indicates in an attached sheet.

Simultaneous (Twin) -Type

1-1. Unit Speci□cations

PE1

2. Ceiling Type S-50PT2E5A×2 / U-100PE1E8A

INDOOR		MODEL	S-50PT2E5A×2							
PANEL		MODEL	-				-			
OUTDOOR		MODEL				U-100PE1E8A				
Branch pipe		MODEL	CZ-P155BK1							
PERFORMANCE TEST CONDITION			ISO5151 / EN14511 / EN14825 / EN12102							
POWER SUPPLY		ø, Hz	1ø 50Hz			3ø 50Hz				
		V	220	230	240	380	400	415	Min	Max
COOLING	CAPACITY	kW	10.0	10.0	10.0				3.3	12.5
		BTU/h	34100	34100	34100				11300	42700
	CURRENT	A	0.39×2	0.38×2	0.37×2	3.95	3.75	3.65	-	-
	INPUT POWER	W	40×2	40×2	40×2	2.450k	2.450k	2.450k	-	-
		TOTAL W		-		2.530k	2.530k	2.530k	840	3.850k
	ANNUAL CONSUMPTION	TOTAL kWh ※4		-		-	1265	-	-	-
	EER/EER CLASS	TOTAL(W/W) ※5/("A"~"G")	-	-	-	3.95	3.95 / A	3.95	3.93	3.25
	Erp ※6 Pdsign	kW	-	-	-	-	10.0	-		
	Erp ※6 SEER	(W/W)	-	-	-	-	6.4	-		
	Erp ※6 Annual consumption	kWh	-	-	-	-	547	-		
	Erp ※6 Class		-	-	-	-	A++	-		
	POWER FACTOR	%	-	-	-	94	94	93	-	-
	NOISE INDOOR (H/M/L)	dB-A		37/33/29						
		Power Level dB		55/51/47						
	NOISE OUTDOOR (H/L)	dB-A					52/-			
		Power Level dB					69/-			
HEATING	CAPACITY	kW	11.2	11.2	11.2				4.1	14.0
		BTU/h	38200	38200	38200				14000	47800
	CURRENT	A	0.39×2	0.38×2	0.37×2	4.05	3.85	3.75	-	-
	INPUT POWER	W	40×2	40×2	40×2	2.520k	2.520k	2.520k	-	-
		TOTAL W		-		2.600k	2.600k	2.600k	900	4.400k
	COP/COP CLASS	TOTAL(W/W) ※5/("A"~"G")	-	-	-	4.31	4.31 / A	4.31	4.56	3.18
	Erp ※6 Pdsign	kW	-	-	-	-	10.0	-		
	Erp ※6 Tbivalen	°C	-	-	-	-	-10	-		
	Erp ※6 SCOP	(W/W)	-	-	-	-	4.3	-		
	Erp ※6 Annual consumption	kWh	-	-	-	-	3256	-		
	Erp ※6 Class		-	-	-	-	A+	-		
	POWER FACTOR	%	-	-	-	95	94	93	-	-
	NOISE INDOOR (H/M/L)	dB-A		37/33/29			-		/	/
		Power Level dB		55/51/47			-			
	NOISE OUTDOOR (H/L)	dB-A		-			52/-		/	/
		Power Level dB		-			69/-			
EXTRA LOW TEMP	Total CAPACITY(kW)/INPUT POWER(W)/COP					-				
MAX CURRENT(A)/MAX INPUT POWER(W)			0.39×2/40×2	0.38×2/40×2	0.37×2/40×2	9.0/5.63k	9.0/5.86k	9.0/6.02k	/	
STARTING CURRENT(A)/COMP OUTPUT(W)			-	-	-	4.05/3.0k	3.85/3.0k	3.75/3.0k	/	
NETWORK IMPEDANCE (ΩMAX.)				-			-			
FM OUTPUT (W)				43			90×2		/	
MOISTURE REMOVAL VOLUME		L/h(Pt/h)	6.0	(3.0×2)	(12.6)		-			
External static pressure		Pa		-						
I/D AIR FLOW	COOL	m^3/min (ft^3/min)		[15/12.5/10.5 (530/441/371)]×2						
	HEAT	m^3/min (ft^3/min)		[15/12.5/10.5 (530/441/371)]×2						
O/D AIR FLOW	COOL	m^3/min (ft^3/min)				110		(3885)		
	HEAT	m^3/min (ft^3/min)				95		(3355)		
REFRIGERANT TYPE, AMOUNT g(oz)						R410A	3.40k	(119.9)	/	
PROD DIM	HEIGHT : H mm(inch)			235 (9-1/4)			1416 (55-3/4)		/	
	WIDTH : W mm(inch)			960 (37-25/32)			940 (37-1/32)		/	
	DEPTH : D mm(inch)			690 (27-5/32)			340 (13-13/32)		/	
PACK DIM	HEIGHT : H mm			360			1556		/	
	WIDTH : W mm			1025			1055		/	
	DEPTH : D mm			820			485		/	
MASS	(NET) kg(lb)			27 (60)			98 (216)		/	
	(GROSS) kg(lb)			34 (75)			108 (238)		/	
LAYERS LIMIT (actually)				9 (10)			1 (2)			
Operation Condition		Cool O.D(DBT)		18°C ~ 32°C			-15°C ~ 46°C			
		Heat O.D(DBT)		16°C ~ 30°C			-20°C ~ 24°C			
PIPING	PIPE DIAMETER mm (inch)		(Liquid)ø6.35(1/4) (Gas)ø12.7(1/2)			(Liquid)ø9.52(3/8) (Gas)ø15.88(5/8)				
	CONNECT METHOD, STD LENGTH m (ft)		flared type, 5.0(16.4)			flared type, 5.0(16.4)				
	PIPE LENGTH RANGE m (ft)		5 ~ 75 (16.4 ~ 246.1)						~	~
	I/D&O/D HEIGHT DIFFERENCE m (ft)		15 (OD located lower) / 30 (OD located higher) (49.2/98.4)							
	ADD GAS AMOUNT g/m (oz/ft)		50 (0.538)							
	PIPE LENGTH FOR ADDITIONAL GAS m (ft)		30 (98.4)							

*1: In case it is necessary to indicate the air □ow volume in (l/s), the value in (m^3/min.) shall be multiplied by 16.7 and rounded down the decimal point.
*2: If the EUROVENT Certi□ed models can be operated under the □extra-low□temperature condition, -7□C dry bulb and -8□C wet-bulb temperatures with rated voltage 230 V shall be used.
*3: Network Impedance shall be applicable for EUROPE and CHINA models.
*4: The annual consumption is calculated by multiplying the input power at 230 V (400 V) by an average of 500 hours per year in cooling mode.
*5: EER and COP classification is at 230 V (400 V) only in accordance with EU directive 2002/31/EC.
*6: SEER and SCOP classification is at 230V(400V) only in accordance with EN-14825. For heating, SCOP indicates the value of only Average heating season, Other fiche data indicates in an attached sheet.

Simultaneous (Triple) -Type

1-1. Unit Speci□cations

PE1

2. Ceiling Type S-50PT2E5A×3 / U-140PE1E8A

INDOOR		MODEL	S-50PT2E5A×3							
PANEL		MODEL	-			-				
OUTDOOR		MODEL				U-140PE1E8A				
Branch pipe		MODEL	CZ-P3HPC2BM							
PERFORMANCE TEST CONDITION			ISO5151 / EN14511 / EN12102							
POWER SUPPLY		ø, Hz	1ø 50Hz			3ø 50Hz				
		V	220	230	240	380	400	415	Min	Max
COOLING	CAPACITY	kW	14.0	14.0	14.0				3.3	15.0
		BTU/h	47800	47800	47800				11300	51200
	CURRENT	A	0.39×3	0.38×3	0.37×3	7.30	6.95	6.70	-	-
	INPUT POWER	W	40×3	40×3	40×3	4.530k	4.530k	4.530k	-	-
		TOTAL W		-		4.650k	4.650k	4.650k	840	5.650k
	ANNUAL CONSUMPTION	TOTAL kWh ※4		-		-	2325	-	-	-
	EER/EER CLASS	TOTAL(W/W)※5("A"~"G")	-	-	-	3.01	3.01 / B	3.01	3.93	2.65
	Erp ※6 Pdsign	kW	-	-	-	-	-	-		
	Erp ※6 SEER	(W/W)	-	-	-	-	-	-		
	Erp ※6 Annual consumption	kWh	-	-	-	-	-	-		
	Erp ※6 Class		-	-	-	-	-	-		
	POWER FACTOR	%	-	-	-	94	94	94	-	-
	NOISE INDOOR (H/M/L)	dB-A		37/33/29						
		Power Level dB		55/51/47						
	NOISE OUTDOOR (H/L)	dB-A					54/-			
		Power Level dB					71/-			
HEATING	CAPACITY	kW	16.0	16.0	16.0				4.1	18.0
		BTU/h	54600	54600	54600				14000	61400
	CURRENT	A	0.39×3	0.38×3	0.37×3	6.85	6.50	6.25	-	-
	INPUT POWER	W	40×3	40×3	40×3	4.240k	4.240k	4.240k	-	-
		TOTAL W		-		4.360k	4.360k	4.360k	900	5.930k
	COP/COP CLASS	TOTAL(W/W)※5("A"~"G")	-	-	-	3.67	3.67 / A	3.67	4.56	3.04
	Erp ※6 Pdsign	kW	-	-	-	-	-	-		
	Erp ※6 Tbivalen	°C	-	-	-	-	-	-		
	Erp ※6 SCOP	(W/W)	-	-	-	-	-	-		
	Erp ※6 Annual consumption	kWh	-	-	-	-	-	-		
	Erp ※6 Class		-	-	-	-	-	-		
	POWER FACTOR	%	-	-	-	94	94	94	-	-
	NOISE INDOOR (H/M/L)	dB-A		37/33/29			-		/	/
		Power Level dB		55/51/47			-			
	NOISE OUTDOOR (H/L)	dB-A		-			55/-		/	/
		Power Level dB		-			71/-			
EXTRA LOW TEMP	Total CAPACITY(kW)/INPUT POWER(W)/COP					-				
MAX CURRENT(A)/MAX INPUT POWER(W)			0.39×3/40×3	0.38×3/40×3	0.37×3/40×3	11.0/6.81k	11.0/7.16k	11.0/7.43k	/	
STARTING CURRENT(A)/COMP OUTPUT(W)			-	-	-	7.30/3.0k	6.95/3.0k	6.70/3.0k	/	
NETWORK IMPEDANCE (ΩMAX.)				-			-			
FM OUTPUT (W)				43			90×2		/	
MOISTURE REMOVAL VOLUME		L/h(Pt/h)	9.0	(3.0×3)	(18.9)		-			
External static pressure		Pa		-						
I/D AIR FLOW	COOL	m^3/min (ft^3/min)		[15/12.5/10.5 (530/441/371)]×3						
	HEAT	m^3/min (ft^3/min)		[15/12.5/10.5 (530/441/371)]×3						
O/D AIR FLOW	COOL	m^3/min (ft^3/min)				135		(4767)		
	HEAT	m^3/min (ft^3/min)				120		(4238)		
REFRIGERANT TYPE, AMOUNT g(oz)						R410A	3.40k	(119.9)	/	
PROD IM	HEIGHT : H mm(inch)			235 (9-1/4)			1416 (55-3/4)		/	
	WIDTH : W mm(inch)			960 (37-25/32)			940 (37-1/32)		/	
	DEPTH : D mm(inch)			690 (27-5/32)			340 (13-13/32)		/	
PACK IM	HEIGHT : H mm			360			1556		/	
	WIDTH : W mm			1025			1055		/	
	DEPTH : D mm			820			485		/	
MASS	(NET) kg(lb)			27 (60)			98 (216)		/	
	(GROSS) kg(lb)			34 (75)			108 (238)		/	
LAYERS LIMIT (actually)				9 (10)			1 (2)			
Operation Condition		Cool O.D(DBT)		18°C ~ 32°C			-15°C ~ 46°C			
		Heat O.D(DBT)		16°C ~ 30°C			-20°C ~ 24°C			
PIPING	PIPE DIAMETER mm (inch)		(Liquid)ø6.35(1/4) (Gas)ø12.7(1/2)			(Liquid)ø9.52(3/8) (Gas)ø15.88(5/8)				
	CONNECT METHOD, STD LENGTH m (ft)		flared type, 5.0(16.4)			flared type, 5.0(16.4)				
	PIPE LENGTH RANGE m (ft)			5 ~ 75 (16.4 ~ 246.1)					~	~
	I/D&O/D HEIGHT DIFFERENCE m (ft)		15 (OD located lower) / 30 (OD located higher) (49.2/98.4)							
	ADD GAS AMOUNT g/m (oz/ft)			50 (0.538)						
	PIPE LENGTH FOR ADDITIONAL GAS m (ft)			20 (65.6)						

*1: In case it is necessary to indicate the air □ow volume in (l/s), the value in (m^3/min.) shall be multiplied by 16.7 and rounded down the decimal point.
*2: If the EUROVENT Certi□ed models can be operated under the □extra-low□temperature condition, -7□C dry bulb and -8□C wet-bulb temperatures with rated voltage 230 V shall be used.
*3: Network Impedance shall be applicable for EUROPE and CHINA models.
*4: The annual consumption is calculated by multiplying the input power at 230 V (400 V) by an average of 500 hours per year in cooling mode.
*5: EER and COP classification is at 230 V (400 V) only in accordance with EU directive 2002/31/EC.
*6: SEER and SCOP classification is at 230V(400V) only in accordance with EN-14825. For heating, SCOP indicates the value of only Average heating season, Other fiche data indicates in an attached sheet.

Simultaneous (Twin) -Type

1-1. Unit Speci□cations

PE1

2. Ceiling Type S-60PT2E5A×2 / U-125PE1E8A

INDOOR		MODEL	S-60PT2E5A×2							
PANEL		MODEL	-				-			
OUTDOOR		MODEL				U-125PE1E8A				
Branch pipe		MODEL	CZ-P155BK1							
PERFORMANCE TEST CONDITION			ISO5151 / EN14511 / EN12102							
POWER SUPPLY		ø, Hz	1ø 50Hz			3ø 50Hz				
		V	220	230	240	380	400	415	Min	Max
COOLING	CAPACITY	kW	12.5	12.5	12.5				3.3	14.0
		BTU/h	42700	42700	42700				11300	47800
	CURRENT	A	0.42×2	0.41×2	0.40×2	5.85	5.55	5.35	-	-
	INPUT POWER	W	50×2	50×2	50×2	3.630k	3.630k	3.630k	-	-
		TOTAL W		-		3.730k	3.730k	3.730k	840	4.860k
	ANNUAL CONSUMPTION	TOTAL kWh ※4		-		-	1865	-	-	-
	EER/EER CLASS	TOTAL(W/W) ※5/("A"~"G")	-	-	-	3.35	3.35 / A	3.35	3.93	2.88
	Erp ※6 Pdsign	kW	-	-	-	-	-	-		
	Erp ※6 SEER	(W/W)	-	-	-	-	-	-		
	Erp ※6 Annual consumption	kWh	-	-	-	-	-	-		
	Erp ※6 Class		-	-	-	-	-	-		
	POWER FACTOR	%	-	-	-	94	94	94	-	-
	NOISE INDOOR (H/M/L)	dB-A		38/34/30						
		Power Level dB		56/52/48						
	NOISE OUTDOOR (H/L)	dB-A					53/-			
		Power Level dB					70/-			
HEATING	CAPACITY	kW	14.0	14.0	14.0				4.1	14.0
		BTU/h	47800	47800	47800				14000	54600
	CURRENT	A	0.42×2	0.41×2	0.40×2	5.50	5.25	5.05	-	-
	INPUT POWER	W	50×2	50×2	50×2	3.410k	3.410k	3.410k	-	-
		TOTAL W		-		3.510k	3.510k	3.510k	900	5.210k
	COP/COP CLASS	TOTAL(W/W) ※5/("A"~"G")	-	-	-	3.99	3.99 / A	3.99	4.56	3.07
	Erp ※6 Pdsign	kW	-	-	-	-	-	-		
	Erp ※6 Tbivalen	°C	-	-	-	-	-	-		
	Erp ※6 SCOP	(W/W)	-	-	-	-	-	-		
	Erp ※6 Annual consumption	kWh	-	-	-	-	-	-		
	Erp ※6 Class		-	-	-	-	-	-		
	POWER FACTOR	%	-	-	-	94	94	94	-	-
	NOISE INDOOR (H/M/L)	dB-A		38/34/30			-		/	/
		Power Level dB		56/52/48			-			
	NOISE OUTDOOR (H/L)	dB-A		-			53/-		/	/
		Power Level dB		-			70/-			
EXTRA LOW TEMP	Total CAPACITY(kW)/INPUT POWER(W)/COP					-				
MAX CURRENT(A)/MAX INPUT POWER(W)			0.42×2/50×2	0.41×2/50×2	0.40×2/50×2	10.0/6.19k	10.0/6.51k	10.0/6.75k	/	
STARTING CURRENT(A)/COMP OUTPUT(W)			-	-	-	5.85/3.0k	5.55/3.0k	5.35/3.0k	/	
NETWORK IMPEDANCE (ΩMAX.)				-			-			
FM OUTPUT (W)				74			90×2		/	
MOISTURE REMOVAL VOLUME		L/h(Pt/h)	7.9	(3.95×2)	(16.6)		-			
External static pressure		Pa		-						
I/D AIR FLOW	COOL	m^3/min (ft^3/min)		[20/17/14.5 (706/600/512)]×2						
	HEAT	m^3/min (ft^3/min)		[20/17/14.5 (706/600/512)]×2						
O/D AIR FLOW	COOL	m^3/min (ft^3/min)				130		(4591)		
	HEAT	m^3/min (ft^3/min)				110		(3885)		
REFRIGERANT TYPE, AMOUNT g(oz)						R410A	3.40k	(119.9)	/	
PROD IM	HEIGHT : H mm(inch)			235 (9-1/4)			1416 (55-3/4)		/	
	WIDTH : W mm(inch)			1275 (50-3/16)			940 (37-1/32)		/	
	DEPTH : D mm(inch)			690 (27-5/32)			340 (13-13/32)		/	
PACK IM	HEIGHT : H mm			360			1556		/	
	WIDTH : W mm			1340			1055		/	
	DEPTH : D mm			820			485		/	
MASS	(NET) kg(lb)			33 (73)			98 (216)		/	
	(GROSS) kg(lb)			42 (93)			108 (238)		/	
LAYERS LIMIT (actually)				9 (10)			1 (2)			
Operation Condition		Cool O.D(DBT)		18°C ~ 32°C			-15°C ~ 46°C			
		Heat O.D(DBT)		16°C ~ 30°C			-20°C ~ 24°C			
PIPING	PIPE DIAMETER mm (inch)		(Liquid)ø9.52(3/8) (Gas)ø15.88(5/8)			(Liquid)ø9.52(3/8) (Gas)ø15.88(5/8)				
	CONNECT METHOD, STD LENGTH m (ft)		flared type, 5.0(16.4)			flared type, 5.0(16.4)				
	PIPE LENGTH RANGE m (ft)		5 ~ 75 (16.4 ~ 246.1)						~	~
	I/D&O/D HEIGHT DIFFERENCE m (ft)		15 (OD located lower) / 30 (OD located higher) (49.2/98.4)							
	ADD GAS AMOUNT g/m (oz/ft)		50 (0.538)							
	PIPE LENGTH FOR ADDITIONAL GAS m (ft)		30 (98.4)							

*1: In case it is necessary to indicate the air □ow volume in (l/s), the value in (m^3/min.) shall be multiplied by 16.7 and rounded down the decimal point.
*2: If the EUROVENT Certi□ed models can be operated under the □extra-low□temperature condition, -7□C dry bulb and -8□C wet-bulb temperatures with rated voltage 230 V shall be used.
*3: Network Impedance shall be applicable for EUROPE and CHINA models.
*4: The annual consumption is calculated by multiplying the input power at 230 V (400 V) by an average of 500 hours per year in cooling mode.
*5: EER and COP classification is at 230 V (400 V) only in accordance with EU directive 2002/31/EC.
*6: SEER and SCOP classification is at 230V(400V) only in accordance with EN-14825. For heating, SCOP indicates the value of only Average heating season, Other fiche data indicates in an attached sheet.

Single -Type

1-1. Unit Speci□cations

PE1

2. Ceiling Type S-71PT2E5A / U-71PE1E8A

INDOOR		MODEL	S-71PT2E5A							
PANEL		MODEL	-				-			
OUTDOOR		MODEL				U-71PE1E8A				
Branch pipe		MODEL	-							
PERFORMANCE TEST CONDITION			ISO5151 / EN14511 / EN14825 / EN12102							
POWER SUPPLY		ø, Hz	1ø 50Hz			3ø 50Hz				
		V	220	230	240	380	400	415	Min	Max
COOLING	CAPACITY	kW	7.1	7.1	7.1				2.5	8.0
		BTU/h	24200	24200	24200				8500	27300
	CURRENT	A	0.45	0.44	0.43	3.00	2.90	2.80	-	-
	INPUT POWER	W	55	55	55	1.875k	1.875k	1.875k	-	-
		TOTAL W		-		1.930k	1.930k	1.930k	450	2.780k
	ANNUAL CONSUMPTION	TOTAL kWh ※4		-		-	965	-	-	-
	EER/EER CLASS	TOTAL(W/W)※5("A"~"G")	-	-	-	3.68	3.68 / A	3.68	5.56	2.88
	Erp ※6 Pdsign	kW	-	-	-	-	7.1	-		
	Erp ※6 SEER	(W/W)	-	-	-	-	5.9	-		
	Erp ※6 Annual consumption	kWh	-	-	-	-	421	-		
	Erp ※6 Class		-	-	-	-	A+	-		
	POWER FACTOR	%	-	-	-	95	93	93	-	-
	NOISE INDOOR (H/M/L)	dB-A		39/35/31						
		Power Level dB		57/53/49						
	NOISE OUTDOOR (H/L)	dB-A					48/-			
		Power Level dB					65/-			
HEATING	CAPACITY	kW	8.0	8.0	8.0				2.0	9.0
		BTU/h	27300	27300	27300				6800	30700
	CURRENT	A	0.45	0.44	0.43	3.00	2.90	2.80	-	-
	INPUT POWER	W	55	55	55	1.875k	1.875k	1.875k	-	-
		TOTAL W		-		1.930k	1.930k	1.930k	400	2.900k
	COP/COP CLASS	TOTAL(W/W)※5("A"~"G")	-	-	-	4.15	4.15 / A	4.15	5.00	3.10
	Erp ※6 Pdsign	kW	-	-	-	-	7.1	-		
	Erp ※6 Tbivalen	°C	-	-	-	-	-9	-		
	Erp ※6 SCOP	(W/W)	-	-	-	-	4.0	-		
	Erp ※6 Annual consumption	kWh	-	-	-	-	2485	-		
	Erp ※6 Class		-	-	-	-	A+	-		
	POWER FACTOR	%	-	-	-	95	93	93	-	-
	NOISE INDOOR (H/M/L)	dB-A		39/35/31			-		/	/
		Power Level dB		57/53/49			-			
	NOISE OUTDOOR (H/L)	dB-A		-			50/-		/	/
		Power Level dB		-			67/-			
EXTRA LOW TEMP	Total CAPACITY(kW)/INPUT POWER(W)/COP					-				
MAX CURRENT(A)/MAX INPUT POWER(W)			0.45/55	0.44/55	0.43/55	7.0/4.15k	7.0/4.36k	7.0/4.53k	/	
STARTING CURRENT(A)/COMP OUTPUT(W)			-	-	-	3.00/2.0k	2.90/2.0k	2.80/2.0k	/	
NETWORK IMPEDANCE (ΩMAX.)				-			-			
FM OUTPUT (W)				74			90		/	
MOISTURE REMOVAL VOLUME		L/h(Pt/h)	4.2		(8.8)		-			
External static pressure		Pa		-						
I/D AIR FLOW	COOL	m^3/min (ft^3/min)		21/18/15.5 (742/636/547)						
	HEAT	m^3/min (ft^3/min)		21/18/15.5 (742/636/547)						
O/D AIR FLOW	COOL	m^3/min (ft^3/min)				60		(2119)		
	HEAT	m^3/min (ft^3/min)				60		(2119)		
REFRIGERANT TYPE, AMOUNT g(oz)						R410A	2.35k	(82.9)	/	
PROD	HEIGHT : H mm(inch)			235 (9-1/4)			996 (39-7/32)		/	
	WIDTH : W mm(inch)			1275 (50-3/16)			940 (37-1/32)		/	
	DEPTH : D mm(inch)			690 (27-5/32)			340 (13-13/32)		/	
PACK	HEIGHT : H mm			360			1136		/	
	WIDTH : W mm			1340			1055		/	
	DEPTH : D mm			820			485		/	
MASS	(NET) kg(lb)			33 (73)			71 (157)		/	
	(GROSS) kg(lb)			42 (93)			79 (174)		/	
LAYERS LIMIT (actually)				9 (10)			2 (3)			
Operation Condition		Cool O.D(DBT)		18°C ~ 32°C			-15°C ~ 46°C			
		Heat O.D(DBT)		16°C ~ 30°C			-20°C ~ 24°C			
PIPING	PIPE DIAMETER mm (inch)		(Liquid)ø9.52(3/8) (Gas)ø15.88(5/8)			(Liquid)ø9.52(3/8) (Gas)ø15.88(5/8)				
	CONNECT METHOD, STD LENGTH m (ft)		flared type, 5.0(16.4)			flared type, 5.0(16.4)				
	PIPE LENGTH RANGE m (ft)		5 ~ 50 (16.4 ~ 164)						~	~
	I/D&O/D HEIGHT DIFFERENCE m (ft)		15 (OD located lower) / 30 (OD located higher) (49.2/98.4)							
	ADD GAS AMOUNT g/m (oz/ft)		50 (0.538)							
	PIPE LENGTH FOR ADDITIONAL GAS m (ft)		30 (98.4)							

*1: In case it is necessary to indicate the air □ow volume in (l/s), the value in (m^3/min.) shall be multiplied by 16.7 and rounded down the decimal point.
*2: If the EUROVENT Certi□ed models can be operated under the □extra-low□temperature condition, -7□C dry bulb and -8□C wet-bulb temperatures with rated voltage 230 V shall be used.
*3: Network Impedance shall be applicable for EUROPE and CHINA models.
*4: The annual consumption is calculated by multiplying the input power at 230 V (400 V) by an average of 500 hours per year in cooling mode.
*5: EER and COP classification is at 230 V (400 V) only in accordance with EU directive 2002/31/EC.
*6: SEER and SCOP classification is at 230V(400V) only in accordance with EN-14825. For heating, SCOP indicates the value of only Average heating season, Other fiche data indicates in an attached sheet.

Simultaneous (Twin) -Type

1-1. Unit Speci□cations

PE1

2. Ceiling Type S-71PT2E5A×2 / U-140PE1E8A

INDOOR		MODEL	S-71PT2E5A×2							
PANEL		MODEL	-				-			
OUTDOOR		MODEL				U-140PE1E8A				
Branch pipe		MODEL	CZ-P155BK1							
PERFORMANCE TEST CONDITION			ISO5151 / EN14511 / EN12102							
POWER SUPPLY		ø, Hz	1ø 50Hz			3ø 50Hz				
		V	220	230	240	380	400	415	Min	Max
COOLING	CAPACITY	kW	14.0	14.0	14.0				3.3	15.0
		BTU/h	47800	47800	47800				11300	51200
	CURRENT	A	0.45×2	0.44×2	0.43×2	7.30	6.95	6.70	-	-
	INPUT POWER	W	55×2	55×2	55×2	4.540k	4.540k	4.540k	-	-
		TOTAL W		-		4.650k	4.650k	4.650k	840	5.650k
	ANNUAL CONSUMPTION	TOTAL kWh ※4		-		-	2325	-	-	-
	EER/EER CLASS	TOTAL(W/W) ※5/("A"~"G")	-	-	-	3.01	3.01 / B	3.01	3.93	2.65
	Erp ※6 Pdsign	kW	-	-	-	-	-	-		
	Erp ※6 SEER	(W/W)	-	-	-	-	-	-		
	Erp ※6 Annual consumption	kWh	-	-	-	-	-	-		
	Erp ※6 Class		-	-	-	-	-	-		
	POWER FACTOR	%	-	-	-	94	94	94	-	-
	NOISE INDOOR (H/M/L)	dB-A		39/35/31						
		Power Level dB		57/53/49						
	NOISE OUTDOOR (H/L)	dB-A					54/-			
		Power Level dB					71/-			
HEATING	CAPACITY	kW	16.0	16.0	16.0				4.1	18.0
		BTU/h	54600	54600	54600				14000	61400
	CURRENT	A	0.45×2	0.44×2	0.43×2	6.85	6.50	6.30	-	-
	INPUT POWER	W	55×2	55×2	55×2	4.250k	4.250k	4.250k	-	-
		TOTAL W		-		4.360k	4.360k	4.360k	900	5.930k
	COP/COP CLASS	TOTAL(W/W) ※5/("A"~"G")	-	-	-	3.67	3.67 / A	3.67	4.56	3.04
	Erp ※6 Pdsign	kW	-	-	-	-	-	-		
	Erp ※6 Tbivalen	°C	-	-	-	-	-	-		
	Erp ※6 SCOP	(W/W)	-	-	-	-	-	-		
	Erp ※6 Annual consumption	kWh	-	-	-	-	-	-		
	Erp ※6 Class		-	-	-	-	-	-		
	POWER FACTOR	%	-	-	-	94	94	94	-	-
	NOISE INDOOR (H/M/L)	dB-A		39/35/31			-		/	/
		Power Level dB		57/53/49			-			
	NOISE OUTDOOR (H/L)	dB-A		-			55/-		/	/
		Power Level dB		-			71/-			
EXTRA LOW TEMP	Total CAPACITY(kW)/INPUT POWER(W)/COP				-					
MAX CURRENT(A)/MAX INPUT POWER(W)			0.45×2/55×2	0.44×2/55×2	0.43×2/55×2	11.0/6.81k	11.0/7.16k	11.0/7.43k	/	
STARTING CURRENT(A)/COMP OUTPUT(W)			-	-	-	7.30/3.0k	6.95/3.0k	6.70/3.0k	/	
NETWORK IMPEDANCE (ΩMAX.)				-			-			
FM OUTPUT (W)				74			90×2		/	
MOISTURE REMOVAL VOLUME		L/h(Pt/h)	9.0	(4.5×2)	(18.9)		-			
External static pressure		Pa		-						
I/D AIR FLOW	COOL	m^3/min (ft^3/min)		[21/18/15.5 (742/636/547)]×2						
	HEAT	m^3/min (ft^3/min)		[21/18/15.5 (742/636/547)]×2						
O/D AIR FLOW	COOL	m^3/min (ft^3/min)				135		(4767)		
	HEAT	m^3/min (ft^3/min)				120		(4238)		
REFRIGERANT TYPE, AMOUNT g(oz)						R410A	3.40k	(119.9)	/	
PROD DIM	HEIGHT : H mm(inch)			235 (9-1/4)			1416 (55-3/4)		/	
	WIDTH : W mm(inch)			1275 (50-3/16)			940 (37-1/32)		/	
	DEPTH : D mm(inch)			690 (27-5/32)			340 (13-13/32)		/	
PACK DIM	HEIGHT : H mm			360			1556		/	
	WIDTH : W mm			1340			1055		/	
	DEPTH : D mm			820			485		/	
MASS	(NET) kg(lb)			33 (73)			98 (216)		/	
	(GROSS) kg(lb)			42 (93)			108 (238)		/	
LAYERS LIMIT (actually)				9 (10)			1 (2)			
Operation Condition		Cool O.D(DBT)		18°C ~ 32°C			-15°C ~ 46°C			
		Heat O.D(DBT)		16°C ~ 30°C			-20°C ~ 24°C			
PIPING	PIPE DIAMETER mm (inch)		(Liquid)ø9.52(3/8) (Gas)ø15.88(5/8)			(Liquid)ø9.52(3/8) (Gas)ø15.88(5/8)				
	CONNECT METHOD, STD LENGTH m (ft)		flared type, 5.0(16.4)			flared type, 5.0(16.4)				
	PIPE LENGTH RANGE m (ft)			5 ~ 75 (16.4 ~ 246.1)					~	~
	I/D&O/D HEIGHT DIFFERENCE m (ft)		15 (OD located lower) / 30 (OD located higher) (49.2/98.4)							
	ADD GAS AMOUNT g/m (oz/ft)			50 (0.538)						
	PIPE LENGTH FOR ADDITIONAL GAS m (ft)			30 (98.4)						

*1: In case it is necessary to indicate the air □ow volume in (l/s), the value in (m^3/min.) shall be multiplied by 16.7 and rounded down the decimal point.
*2: If the EUROVENT Certi□ed models can be operated under the □extra-low□temperature condition, -7□C dry bulb and -8□C wet-bulb temperatures with rated voltage 230 V shall be used.
*3: Network Impedance shall be applicable for EUROPE and CHINA models.
*4: The annual consumption is calculated by multiplying the input power at 230 V (400 V) by an average of 500 hours per year in cooling mode.
*5: EER and COP classification is at 230 V (400 V) only in accordance with EU directive 2002/31/EC.
*6: SEER and SCOP classification is at 230V(400V) only in accordance with EN-14825. For heating, SCOP indicates the value of only Average heating season, Other fiche data indicates in an attached sheet.

Single -Type

1-1. Unit Speci□cations

PE1

2. Ceiling Type S-100PT2E5A / U-100PE1E8A

INDOOR		MODEL	S-100PT2E5A							
PANEL		MODEL	-				-			
OUTDOOR		MODEL				U-100PE1E8A				
Branch pipe		MODEL	-							
PERFORMANCE TEST CONDITION			ISO5151 / EN14511 / EN14825 / EN12102							
POWER SUPPLY		ø, Hz	1ø 50Hz			3ø 50Hz				
		V	220	230	240	380	400	415	Min	Max
COOLING	CAPACITY	kW	10.0	10.0	10.0				3.3	12.5
		BTU/h	34100	34100	34100				11300	42700
	CURRENT	A	0.69	0.67	0.65	3.95	3.75	3.65	-	-
	INPUT POWER	W	80	80	80	2.450k	2.450k	2.450k	-	-
		TOTAL W		-		2.530k	2.530k	2.530k	840	3.850k
	ANNUAL CONSUMPTION	TOTAL kWh ※4		-		-	1265	-	-	-
	EER/EER CLASS	TOTAL(W/W)※5("A"~"G")	-	-	-	3.95	3.95 / A	3.95	3.93	3.25
	Erp ※6 Pdsign	kW	-	-	-	-	10.0	-		
	Erp ※6 SEER	(W/W)	-	-	-	-	6.6	-		
	Erp ※6 Annual consumption	kWh	-	-	-	-	531	-		
	Erp ※6 Class		-	-	-	-	A++	-		
	POWER FACTOR	%	-	-	-	94	94	93	-	-
	NOISE INDOOR (H/M/L)	dB-A		42/37/35						
		Power Level dB		60/55/53						
	NOISE OUTDOOR (H/L)	dB-A					52/-			
		Power Level dB					69/-			
HEATING	CAPACITY	kW	11.2	11.2	11.2				4.1	14.0
		BTU/h	38200	38200	38200				14000	47800
	CURRENT	A	0.69	0.67	0.65	4.05	3.85	3.75	-	-
	INPUT POWER	W	80	80	80	2.520k	2.520k	2.520k	-	-
		TOTAL W		-		2.600k	2.600k	2.600k	900	4.400k
	COP/COP CLASS	TOTAL(W/W)※5("A"~"G")	-	-	-	4.31	4.31 / A	4.31	4.56	3.18
	Erp ※6 Pdsign	kW	-	-	-	-	10.0	-		
	Erp ※6 Tbivalen	°C	-	-	-	-	-10	-		
	Erp ※6 SCOP	(W/W)	-	-	-	-	4.3	-		
	Erp ※6 Annual consumption	kWh	-	-	-	-	3256	-		
	Erp ※6 Class		-	-	-	-	A+	-		
	POWER FACTOR	%	-	-	-	95	94	93	-	-
	NOISE INDOOR (H/M/L)	dB-A		42/37/35			-		/	/
		Power Level dB		60/55/53			-			
	NOISE OUTDOOR (H/L)	dB-A		-			52/-		/	/
		Power Level dB		-			69/-			
EXTRA LOW TEMP	Total CAPACITY(kW)/INPUT POWER(W)/COP					-				
MAX CURRENT(A)/MAX INPUT POWER(W)			0.69/80	0.67/80	0.65/80	9.0/5.63k	9.0/5.86k	9.0/6.02k	/	
STARTING CURRENT(A)/COMP OUTPUT(W)			-	-	-	4.05/3.0k	3.85/3.0k	3.75/3.0k	/	
NETWORK IMPEDANCE (ΩMAX.)				-			-			
FM OUTPUT (W)				111			90×2		/	
MOISTURE REMOVAL VOLUME		L/h(Pt/h)	6.0		(12.6)		-			
External static pressure		Pa		-						
I/D AIR FLOW	COOL	m^3/min (ft^3/min)		30/25/23 (1059/883/812)						
	HEAT	m^3/min (ft^3/min)		30/25/23 (1059/883/812)						
O/D AIR FLOW	COOL	m^3/min (ft^3/min)				110		(3885)		
	HEAT	m^3/min (ft^3/min)				95		(3355)		
REFRIGERANT TYPE, AMOUNT g(oz)						R410A	3.40k	(119.9)	/	
PROD	HEIGHT : H mm(inch)			235 (9-1/4)			1416 (55-3/4)		/	
	WIDTH : W mm(inch)			1590 (62-19/32)			940 (37-1/32)		/	
	DEPTH : D mm(inch)			690 (27-5/32)			340 (13-13/32)		/	
PACK	HEIGHT : H mm			360			1556		/	
	WIDTH : W mm			1655			1055		/	
	DEPTH : D mm			820			485		/	
MASS	(NET) kg(lb)			40 (88)			98 (216)		/	
	(GROSS) kg(lb)			49 (108)			108 (238)		/	
LAYERS LIMIT (actually)				9 (10)			1 (2)			
Operation Condition		Cool O.D(DBT)		18°C ~ 32°C			-15°C ~ 46°C			
		Heat O.D(DBT)		16°C ~ 30°C			-20°C ~ 24°C			
PIPING	PIPE DIAMETER mm (inch)		(Liquid)ø9.52(3/8) (Gas)ø15.88(5/8)			(Liquid)ø9.52(3/8) (Gas)ø15.88(5/8)				
	CONNECT METHOD, STD LENGTH m (ft)		flared type, 5.0(16.4)			flared type, 5.0(16.4)				
	PIPE LENGTH RANGE m (ft)		5 ~ 75 (16.4 ~ 246.1)						~	~
	I/D&O/D HEIGHT DIFFERENCE m (ft)		15 (OD located lower) / 30 (OD located higher) (49.2/98.4)							
	ADD GAS AMOUNT g/m (oz/ft)		50 (0.538)							
	PIPE LENGTH FOR ADDITIONAL GAS m (ft)		30 (98.4)							

*1: In case it is necessary to indicate the air □ow volume in (l/s), the value in (m^3/min.) shall be multiplied by 16.7 and rounded down the decimal point.
*2: If the EUROVENT Certi□ed models can be operated under the □extra-low□temperature condition, -7□C dry bulb and -8□C wet-bulb temperatures with rated voltage 230 V shall be used.
*3: Network Impedance shall be applicable for EUROPE and CHINA models.
*4: The annual consumption is calculated by multiplying the input power at 230 V (400 V) by an average of 500 hours per year in cooling mode.
*5: EER and COP classification is at 230 V (400 V) only in accordance with EU directive 2002/31/EC.
*6: SEER and SCOP classification is at 230V(400V) only in accordance with EN-14825. For heating, SCOP indicates the value of only Average heating season, Other fiche data indicates in an attached sheet.

Single -Type

1-1. Unit Speci□cations

PE1

2. Ceiling Type S-125PT2E5A / U-125PE1E8A

INDOOR		MODEL	S-125PT2E5A							
PANEL		MODEL	-				-			
OUTDOOR		MODEL				U-125PE1E8A				
Branch pipe		MODEL	-							
PERFORMANCE TEST CONDITION			ISO5151 / EN14511 / EN12102							
POWER SUPPLY		ø, Hz	1ø 50Hz			3ø 50Hz				
		V	220	230	240	380	400	415	Min	Max
COOLING	CAPACITY	kW	12.5	12.5	12.5				3.3	14.0
		BTU/h	42700	42700	42700				11300	47800
	CURRENT	A	0.89	0.86	0.83	5.85	5.55	5.35	-	-
	INPUT POWER	W	110	110	110	3.620k	3.620k	3.620k	-	-
		TOTAL W		-		3.730k	3.730k	3.730k	840	4.860k
	ANNUAL CONSUMPTION	TOTAL kWh ※4		-		-	1865	-	-	-
	EER/EER CLASS	TOTAL(W/W)※5("A"~"G")	-	-	-	3.35	3.35 / A	3.35	3.93	2.88
	Erp ※6 Pdsign	kW	-	-	-	-	-	-		
	Erp ※6 SEER	(W/W)	-	-	-	-	-	-		
	Erp ※6 Annual consumption	kWh	-	-	-	-	-	-		
	Erp ※6 Class		-	-	-	-	-	-		
	POWER FACTOR	%	-	-	-	94	94	94	-	-
	NOISE INDOOR (H/M/L)	dB-A		46/40/36						
		Power Level dB		64/58/54						
	NOISE OUTDOOR (H/L)	dB-A					53/-			
		Power Level dB					70/-			
HEATING	CAPACITY	kW	14.0	14.0	14.0				4.1	16.0
		BTU/h	47800	47800	47800				14000	54600
	CURRENT	A	0.89	0.86	0.83	5.50	5.20	5.05	-	-
	INPUT POWER	W	110	110	110	3.400k	3.400k	3.400k	-	-
		TOTAL W		-		3.510k	3.510k	3.510k	900	5.210k
	COP/COP CLASS	TOTAL(W/W)※5("A"~"G")	-	-	-	3.99	3.99 / A	3.99	4.56	3.07
	Erp ※6 Pdsign	kW	-	-	-	-	-	-		
	Erp ※6 Tbivalen	°C	-	-	-	-	-	-		
	Erp ※6 SCOP	(W/W)	-	-	-	-	-	-		
	Erp ※6 Annual consumption	kWh	-	-	-	-	-	-		
	Erp ※6 Class		-	-	-	-	-	-		
	POWER FACTOR	%	-	-	-	94	94	94	-	-
	NOISE INDOOR (H/M/L)	dB-A		46/40/36			-		/	/
		Power Level dB		64/58/54			-			
	NOISE OUTDOOR (H/L)	dB-A		-			53/-		/	/
		Power Level dB		-			70/-			
EXTRA LOW TEMP	Total CAPACITY(kW)/INPUT POWER(W)/COP					-				
MAX CURRENT(A)/MAX INPUT POWER(W)			0.89/110	0.86/110	0.83/110	10.0/6.19k	10.0/6.51k	10.0/6.75k	/	
STARTING CURRENT(A)/COMP OUTPUT(W)			-	-	-	5.85/3.0k	5.55/3.0k	5.35/3.0k	/	
NETWORK IMPEDANCE (ΩMAX.)				-			-			
FM OUTPUT (W)				111			90×2		/	
MOISTURE REMOVAL VOLUME		L/h(Pt/h)	7.9		(16.6)		-			
External static pressure		Pa		-						
I/D AIR FLOW	COOL	m^3/min (ft^3/min)		34/28/24 (1201/989/848)						
	HEAT	m^3/min (ft^3/min)		34/28/24 (1201/989/848)						
O/D AIR FLOW	COOL	m^3/min (ft^3/min)				130		(4591)		
	HEAT	m^3/min (ft^3/min)				110		(3885)		
REFRIGERANT TYPE, AMOUNT g(oz)						R410A	3.40k	(119.9)	/	
PROD	HEIGHT : H mm(inch)			235 (9-1/4)			1416 (55-3/4)		/	
	WIDTH : W mm(inch)			1590 (62-19/32)			940 (37-1/32)		/	
	DEPTH : D mm(inch)			690 (27-5/32)			340 (13-13/32)		/	
PACK	HEIGHT : H mm			360			1556		/	
	WIDTH : W mm			1655			1055		/	
	DEPTH : D mm			820			485		/	
MASS	(NET) kg(lb)			40 (88)			98 (216)		/	
	(GROSS) kg(lb)			49 (108)			108 (238)		/	
LAYERS LIMIT (actually)				9 (10)			1 (2)			
Operation Condition		Cool O.D(DBT)		18°C ~ 32°C			-15°C ~ 46°C			
		Heat O.D(DBT)		16°C ~ 30°C			-20°C ~ 24°C			
PIPING	PIPE DIAMETER mm (inch)		(Liquid)ø9.52(3/8) (Gas)ø15.88(5/8)			(Liquid)ø9.52(3/8) (Gas)ø15.88(5/8)				
	CONNECT METHOD, STD LENGTH m (ft)		flared type, 5.0(16.4)			flared type, 5.0(16.4)				
	PIPE LENGTH RANGE m (ft)		5 ~ 75 (16.4 ~ 246.1)						~	~
	I/D&O/D HEIGHT DIFFERENCE m (ft)		15 (OD located lower) / 30 (OD located higher) (49.2/98.4)							
	ADD GAS AMOUNT g/m (oz/ft)		50 (0.538)							
	PIPE LENGTH FOR ADDITIONAL GAS m (ft)		30 (98.4)							

*1: In case it is necessary to indicate the air □ow volume in (l/s), the value in (m^3/min.) shall be multiplied by 16.7 and rounded down the decimal point.
*2: If the EUROVENT Certi□ed models can be operated under the □extra-low□temperature condition, -7□C dry bulb and -8□C wet-bulb temperatures with rated voltage 230 V shall be used.
*3: Network Impedance shall be applicable for EUROPE and CHINA models.
*4: The annual consumption is calculated by multiplying the input power at 230 V (400 V) by an average of 500 hours per year in cooling mode.
*5: EER and COP classification is at 230 V (400 V) only in accordance with EU directive 2002/31/EC.
*6: SEER and SCOP classification is at 230V(400V) only in accordance with EN-14825. For heating, SCOP indicates the value of only Average heating season, Other fiche data indicates in an attached sheet.

Single -Type

1-1. Unit Speci□cations

PE1

2. Ceiling Type S-140PT2E5A / U-140PE1E8A

INDOOR		MODEL	S-140PT2E5A							
PANEL		MODEL	-			-				
OUTDOOR		MODEL				U-140PE1E8A				
Branch pipe		MODEL	-							
PERFORMANCE TEST CONDITION			ISO5151 / EN14511 / EN12102							
POWER SUPPLY		ø, Hz	1ø 50Hz			3ø 50Hz				
		V	220	230	240	380	400	415	Min	Max
COOLING	CAPACITY	kW	14.0	14.0	14.0				3.3	15.0
		BTU/h	47800	47800	47800				11300	51200
	CURRENT	A	0.94	0.91	0.88	7.30	6.95	6.70	-	-
	INPUT POWER	W	120	120	120	4.530k	4.530k	4.530k	-	-
		TOTAL W		-		4.650k	4.650k	4.650k	840	5.650k
	ANNUAL CONSUMPTION	TOTAL kWh ※4		-		-	2325	-	-	-
	EER/EER CLASS	TOTAL(W/W)※5("A"~"G")	-	-	-	3.01	3.01 / B	3.01	3.93	2.65
	Erp ※6	Pdsign kW	-	-	-	-	-	-		
		SEER (W/W)	-	-	-	-	-	-		
		Annual consumption kWh	-	-	-	-	-	-		
		Class	-	-	-	-	-	-		
	POWER FACTOR	%	-	-	-	94	94	94	-	-
	NOISE INDOOR (H/M/L)	dB-A		47/41/37						
		Power Level dB		65/59/55						
	NOISE OUTDOOR (H/L)	dB-A					54/-			
		Power Level dB					71/-			
HEATING	CAPACITY	kW	16.0	16.0	16.0				4.1	18.0
		BTU/h	54600	54600	54600				14000	61400
	CURRENT	A	0.94	0.91	0.88	6.85	6.50	6.25	-	-
	INPUT POWER	W	120	120	120	4.240k	4.240k	4.240k	-	-
		TOTAL W		-		4.360k	4.360k	4.360k	900	5.930k
	COP/COP CLASS	TOTAL(W/W)※5("A"~"G")	-	-	-	3.67	3.67 / A	3.67	4.56	3.04
	Erp ※6	Pdsign kW	-	-	-	-	-	-		
		Tbivalen °C	-	-	-	-	-	-		
		SCOP (W/W)	-	-	-	-	-	-		
		Annual consumption kWh	-	-	-	-	-	-		
		Class	-	-	-	-	-	-		
	POWER FACTOR	%	-	-	-	94	94	94	-	-
	NOISE INDOOR (H/M/L)	dB-A		47/41/37			-		/	/
		Power Level dB		65/59/55			-			
	NOISE OUTDOOR (H/L)	dB-A		-			55/-		/	/
		Power Level dB		-			71/-			
EXTRA LOW TEMP	Total CAPACITY(kW)/INPUT POWER(W)/COP					-				
MAX CURRENT(A)/MAX INPUT POWER(W)			0.94/120	0.91/120	0.88/120	11.0/6.81k	11.0/7.16k	11.0/7.43k	/	
STARTING CURRENT(A)/COMP OUTPUT(W)			-	-	-	7.30/3.0k	6.95/3.0k	6.70/3.0k	/	
NETWORK IMPEDANCE (ΩMAX.)				-			-			
FM OUTPUT (W)				111			90×2		/	
MOISTURE REMOVAL VOLUME		L/h(Pt/h)	9.0		(18.9)		-			
External static pressure		Pa		-						
I/D AIR FLOW	COOL	m^3/min (ft^3/min)		35/29/25 (1236/1024/883)						
	HEAT	m^3/min (ft^3/min)		35/29/25 (1236/1024/883)						
O/D AIR FLOW	COOL	m^3/min (ft^3/min)				135		(4767)		
	HEAT	m^3/min (ft^3/min)				120		(4238)		
REFRIGERANT TYPE, AMOUNT g(oz)						R410A	3.40k	(119.9)	/	
PROD	HEIGHT : H mm(inch)			235 (9-1/4)			1416 (55-3/4)		/	
	WIDTH : W mm(inch)			1590 (62-19/32)			940 (37-1/32)		/	
	DEPTH : D mm(inch)			690 (27-5/32)			340 (13-13/32)		/	
PACK	HEIGHT : H mm			360			1556		/	
	WIDTH : W mm			1655			1055		/	
	DEPTH : D mm			820			485		/	
MASS	(NET) kg(lb)			40 (88)			98 (216)		/	
	(GROSS) kg(lb)			49 (108)			108 (238)		/	
LAYERS LIMIT (actually)				9 (10)			1 (2)			
Operation Condition		Cool O.D(DBT)		18°C ~ 32°C			-15°C ~ 46°C			
		Heat O.D(DBT)		16°C ~ 30°C			-20°C ~ 24°C			
PIPING	PIPE DIAMETER mm (inch)		(Liquid)ø9.52(3/8) (Gas)ø15.88(5/8)			(Liquid)ø9.52(3/8) (Gas)ø15.88(5/8)				
	CONNECT METHOD, STD LENGTH m (ft)		flared type, 5.0(16.4)			flared type, 5.0(16.4)				
	PIPE LENGTH RANGE m (ft)		5 ~ 75 (16.4 ~ 246.1)						~	~
	I/D&O/D HEIGHT DIFFERENCE m (ft)		15 (OD located lower) / 30 (OD located higher) (49.2/98.4)							
	ADD GAS AMOUNT g/m (oz/ft)		50 (0.538)							
	PIPE LENGTH FOR ADDITIONAL GAS m (ft)		30 (98.4)							

*1: In case it is necessary to indicate the air □ow volume in (l/s), the value in (m^3/min.) shall be multiplied by 16.7 and rounded down the decimal point.
*2: If the EUROVENT Certi□ed models can be operated under the □extra-low□temperature condition, -7□C dry bulb and -8□C wet-bulb temperatures with rated voltage 230 V shall be used.
*3: Network Impedance shall be applicable for EUROPE and CHINA models.
*4: The annual consumption is calculated by multiplying the input power at 230 V (400 V) by an average of 500 hours per year in cooling mode.
*5: EER and COP classification is at 230 V (400 V) only in accordance with EU directive 2002/31/EC.
*6: SEER and SCOP classification is at 230V(400V) only in accordance with EN-14825. For heating, SCOP indicates the value of only Average heating season, Other fiche data indicates in an attached sheet.

Simultaneous (Twin) -Type

1-1. Unit Speci□cations

PE1

3. Wall Mounted Type S-36PK1E5A×2 / U-71PE1E5A

INDOOR		MODEL	S-36PK1E5A×2							
PANEL		MODEL	-			-				
OUTDOOR		MODEL				U-71PE1E5A				
Branch pipe		MODEL	CZ-P155BK1							
PERFORMANCE TEST CONDITION			ISO5151 / EN14511 / EN14825 / EN12102							
POWER SUPPLY		ø, Hz	1ø 50Hz			1ø 50Hz				
		V	220	230	240	220	230	240	Min	Max
COOLING	CAPACITY	kW	7.1	7.1	7.1				2.5	8.0
		BTU/h	24200	24200	24200				8500	27300
	CURRENT	A	0.20×2	0.19×2	0.19×2	9.75	9.40	9.10	-	-
	INPUT POWER	W	16×2	17×2	17×2	2.055k	2.055k	2.055k	-	-
		TOTAL W		-		2.090k	2.090k	2.090k	450	2.650k
	ANNUAL CONSUMPTION	TOTAL kWh ※4		-		-	1032.5	-	-	-
	EER/EER CLASS	TOTAL(W/W)※5("A"~"G")	-	-	-	3.40	3.40 / A	3.40	5.56	3.02
	Erp ※6 Pdsign	kW	-	-	-	-	7.1	-		
	Erp ※6 SEER	(W/W)	-	-	-	-	6.6	-		
	Erp ※6 Annual consumption	kWh	-	-	-	-	376	-		
	Erp ※6 Class		-	-	-	-	A++	-		
	POWER FACTOR	%	-	-	-	96	95	94	-	-
	NOISE INDOOR (H/M/L)	dB-A		35/31/27						
		Power Level dB		52/46/41						
	NOISE OUTDOOR (H/L)	dB-A					48/-			
		Power Level dB					65/-			
HEATING	CAPACITY	kW	8.0	8.0	8.0				2.0	9.0
		BTU/h	27300	27300	27300				6800	30700
	CURRENT	A	0.20×2	0.19×2	0.19×2	9.85	9.50	9.20	-	-
	INPUT POWER	W	16×2	17×2	17×2	2.095k	2.095k	2.095k	-	-
		TOTAL W		-		2.130k	2.130k	2.130k	400	2.900k
	COP/COP CLASS	TOTAL(W/W)※5("A"~"G")	-	-	-	3.76	3.76 / A	3.76	5.00	3.10
	Erp ※6 Pdsign	kW	-	-	-	-	7.1	-		
	Erp ※6 Tbivalen	°C	-	-	-	-	-8	-		
	Erp ※6 SCOP	(W/W)	-	-	-	-	3.9	-		
	Erp ※6 Annual consumption	kWh	-	-	-	-	2548	-		
	Erp ※6 Class		-	-	-	-	A	-		
	POWER FACTOR	%	-	-	-	97	96	95	-	-
	NOISE INDOOR (H/M/L)	dB-A		35/31/27			-		/	/
		Power Level dB		52/46/41			-			
	NOISE OUTDOOR (H/L)	dB-A		-			50/-		/	/
		Power Level dB		-			67/-			
EXTRA LOW TEMP	Total CAPACITY(kW)/INPUT POWER(W)/COP				-					
MAX CURRENT(A)/MAX INPUT POWER(W)			0.20×2/16×2	0.19×2/17×2	0.19×2/17×2	18.0/3.800k	18.0/3.930k	18.0/4.060k	/	
STARTING CURRENT(A)/COMP OUTPUT(W)			-	-	-	9.85/2.0k	9.50/2.0k	9.20/2.0k	/	
NETWORK IMPEDANCE (ΩMAX.)				-			-			
FM OUTPUT (W)				47×2			90		/	
MOISTURE REMOVAL VOLUME		L/h(Pt/h)	4.2 (2.1×2)		(8.8)		-			
External static pressure		Pa		-						
I/D AIR FLOW	COOL	m^3/min (ft^3/min)		[11/9.5/7.5 (388/335/265)]×2						
	HEAT	m^3/min (ft^3/min)		[11/9.5/7.5 (388/335/265)]×2						
O/D AIR FLOW	COOL	m^3/min (ft^3/min)				60		(2119)		
	HEAT	m^3/min (ft^3/min)				60		(2119)		
REFRIGERANT TYPE, AMOUNT g(oz)						R410A	2.35k	(82.9)	/	
PROD IM	HEIGHT : H mm(inch)			300 (11-1/32)			996 (39-7/32)		/	
	WIDTH : W mm(inch)			1065 (41-23/64)			940 (37-1/32)		/	
	DEPTH : D mm(inch)			230 (9-1/32)			340 (13-13/32)		/	
PACK IM	HEIGHT : H mm			310			1136		/	
	WIDTH : W mm			1140			1055		/	
	DEPTH : D mm			380			485		/	
MASS	(NET) kg(lb)			13 (29)			69 (152)		/	
	(GROSS) kg(lb)			17 (37)			77 (170)		/	
LAYERS LIMIT (actually)				15 (16)			2 (3)			
Operation Condition		Cool O.D(DBT)		18°C ~ 32°C			-15°C ~ 46°C			
		Heat O.D(DBT)		16°C ~ 30°C			-20°C ~ 24°C			
PIPING	PIPE DIAMETER mm (inch)		(Liquid)ø6.35(1/4) (Gas)ø12.7(1/2)			(Liquid)ø9.52(3/8) (Gas)ø15.88(5/8)				
	CONNECT METHOD, STD LENGTH m (ft)		flared type, 5.0(16.4)			flared type, 5.0(16.4)				
	PIPE LENGTH RANGE m (ft)			5 ~ 50 (16.4 ~ 164.0)					~	~
	I/D&O/D HEIGHT DIFFERENCE m (ft)		15 (OD located lower) / 30 (OD located higher) (49.2/98.4)							
	ADD GAS AMOUNT g/m (oz/ft)			50 (0.538)						
	PIPE LENGTH FOR ADDITIONAL GAS m (ft)			30 (98.4)						

*1: In case it is necessary to indicate the air □ow volume in (l/s), the value in (m^3/min.) shall be multiplied by 16.7 and rounded down the decimal point.
*2: If the EUROVENT Certi□ed models can be operated under the □extra-low□temperature condition, -7□C dry bulb and -8□C wet-bulb temperatures with rated voltage 230 V shall be used.
*3: Network Impedance shall be applicable for EUROPE and CHINA models.
*4: The annual consumption is calculated by multiplying the input power at 230 V (400 V) by an average of 500 hours per year in cooling mode.
*5: EER and COP classification is at 230 V (400 V) only in accordance with EU directive 2002/31/EC.
*6: SEER and SCOP classification is at 230V(400V) only in accordance with EN-14825. For heating, SCOP indicates the value of only Average heating season, Other fiche data indicates in an attached sheet.

Simultaneous (Triple) -Type

1-1. Unit Specifications

PE1

3. Wall Mounted Type S-36PK1E5A×3 / U-100PE1E5A

INDOOR		MODEL	S-36PK1E5A×3							
PANEL		MODEL	-			-				
OUTDOOR		MODEL				U-100PE1E5A				
Branch pipe		MODEL	CZ-P3HPC2							
PERFORMANCE TEST CONDITION			ISO5151 / EN14511 / EN14825 / EN12102							
POWER SUPPLY		ø, Hz	1ø 50Hz			1ø 50Hz				
		V	220	230	240	220	230	240	Min	Max
COOLING	CAPACITY	kW	10.0	10.0	10.0				3.3	12.5
		BTU/h	34100	34100	34100				11300	42700
	CURRENT	A	0.20×3	0.19×3	0.19×3	12.0	11.4	10.9	-	-
	INPUT POWER	W	16×3	17×3	17×3	2.525k	2.525k	2.520k	-	-
		TOTAL W		-		2.575k	2.580k	2.575k	840	3.700k
	ANNUAL CONSUMPTION	TOTAL kWh ※4		-		-	1290	-	-	-
	EER/EER CLASS	TOTAL(W/W)※5/("A"~"G")	-	-	-	3.88	3.88 / A	3.88	3.93	3.38
	Erp ※6 Pdsign	kW	-	-	-	-	10.0	-		
	Erp ※6 SEER	(W/W)	-	-	-	-	6.2	-		
	Erp ※6 Annual consumption	kWh	-	-	-	-	564	-		
	Erp ※6 Class		-	-	-	-	A++	-		
	POWER FACTOR	%	-	-	-	96	96	96	-	-
	NOISE INDOOR (H/M/L)	dB-A		35/31/27						
		Power Level dB		52/46/41						
	NOISE OUTDOOR (H/L)	dB-A					52/-			
		Power Level dB					69/-			
HEATING	CAPACITY	kW	11.2	11.2	11.2				4.1	14.0
		BTU/h	38200	38200	38200				14000	47800
	CURRENT	A	0.20×3	0.19×3	0.19×3	13.1	12.5	12.0	-	-
	INPUT POWER	W	16×3	17×3	17×3	2.705k	2.705k	2.700k	-	-
		TOTAL W		-		2.755k	2.760k	2.755k	900	4.400k
	COP/COP CLASS	TOTAL(W/W)※5/("A"~"G")	-	-	-	4.07	4.06 / A	4.07	4.56	3.18
	Erp ※6 Pdsign	kW	-	-	-	-	10.0	-		
	Erp ※6 Tbivalen	°C	-	-	-	-	-10	-		
	Erp ※6 SCOP	(W/W)	-	-	-	-	4.0	-		
	Erp ※6 Annual consumption	kWh	-	-	-	-	3500	-		
	Erp ※6 Class		-	-	-	-	A+	-		
	POWER FACTOR	%	-	-	-	94	94	94	-	-
	NOISE INDOOR (H/M/L)	dB-A		35/31/27			-		/	/
		Power Level dB		52/46/41			-			
	NOISE OUTDOOR (H/L)	dB-A		-			52/-		/	/
		Power Level dB		-			69/-			
EXTRA LOW TEMP	Total CAPACITY(kW)/INPUT POWER(W)/COP					-				
MAX CURRENT(A)/MAX INPUT POWER(W)			0.20/16×3	0.19/17×3	0.19/17×3	25.0/5.350k	25.0/5.550k	25.0/5.750k	/	
STARTING CURRENT(A)/COMP OUTPUT(W)			-	-	-	13.1/3.0k	12.5/3.0k	12.0/3.0k	/	
NETWORK IMPEDANCE (ΩMAX.)				-			-			
FM OUTPUT (W)				47×3			90×2		/	
MOISTURE REMOVAL VOLUME		L/h(Pt/h)	6.0 (2.0×3)		(12.6)		-			
External static pressure		Pa		-						
I/D AIR FLOW	COOL	m^3/min (ft^3/min)		[11/9.5/7.5 (388/335/265)]×3						
	HEAT	m^3/min (ft^3/min)		[11/9.5/7.5 (388/335/265)]×3						
O/D AIR FLOW	COOL	m^3/min (ft^3/min)				110		(3885)		
	HEAT	m^3/min (ft^3/min)				95		(3355)		
REFRIGERANT TYPE, AMOUNT g(oz)						R410A	3.40k	(119.9)	/	
PROD DIM	HEIGHT : H mm(inch)			300 (11-1/32)			1416 (55-3/4)		/	
	WIDTH : W mm(inch)			1065 (41-23/64)			940 (37-1/32)		/	
	DEPTH : D mm(inch)			230 (9-1/32)			340 (13-13/32)		/	
PACK DIM	HEIGHT : H mm			310			1556		/	
	WIDTH : W mm			1140			1055		/	
	DEPTH : D mm			380			485		/	
MASS	(NET) kg(lb)			13 (29)			98 (216)		/	
	(GROSS) kg(lb)			17 (37)			108 (238)		/	
LAYERS LIMIT (actually)				15 (16)			1 (2)			
Operation Condition		Cool O.D(DBT)		18°C ~ 32°C			-15°C ~ 46°C			
		Heat O.D(DBT)		16°C ~ 30°C			-20°C ~ 24°C			
PIPING	PIPE DIAMETER mm (inch)		(Liquid)ø6.35(1/4) (Gas)ø12.7(1/2)			(Liquid)ø9.52(3/8) (Gas)ø15.88(5/8)				
	CONNECT METHOD, STD LENGTH m (ft)		flared type, 5.0(16.4)			flared type, 5.0(16.4)				
	PIPE LENGTH RANGE m (ft)			5 ~ 75 (16.4 ~ 246.1)					~	~
	I/D&O/D HEIGHT DIFFERENCE m (ft)		15 (OD located lower) / 30 (OD located higher) (49.2/98.4)							
	ADD GAS AMOUNT g/m (oz/ft)			50 (0.538)						
	PIPE LENGTH FOR ADDITIONAL GAS m (ft)			30 (98.4)						

*1: In case it is necessary to indicate the air □ow volume in (l/s), the value in (m^3/min.) shall be multiplied by 16.7 and rounded down the decimal point.
*2: If the EUROVENT Certi□ed models can be operated under the □extra-low□temperature condition, -7□C dry bulb and -8□C wet-bulb temperatures with rated voltage 230 V shall be used.
*3: Network Impedance shall be applicable for EUROPE and CHINA models.
*4: The annual consumption is calculated by multiplying the input power at 230 V (400 V) by an average of 500 hours per year in cooling mode.
*5: EER and COP classification is at 230 V (400 V) only in accordance with EU directive 2002/31/EC.
*6: SEER and SCOP classification is at 230V(400V) only in accordance with EN-14825. For heating, SCOP indicates the value of only Average heating season, Other fiche data indicates in an attached sheet.

Simultaneous (Double-Twin) -Type

1-1. Unit Speci□cations

PE1

3. Wall Mounted Type S-36PK1E5A×4 / U-125PE1E5A

INDOOR		MODEL	S-36PK1E5A×4							
PANEL		MODEL	-			-				
OUTDOOR		MODEL				U-125PE1E5A				
Branch pipe		MODEL	CZ-P155BK1×3							
PERFORMANCE TEST CONDITION			ISO5151 / EN14511 / EN12102							
POWER SUPPLY		ø, Hz	1ø 50Hz			1ø 50Hz				
		V	220	230	240	220	230	240	Min	Max
COOLING	CAPACITY	kW	12.5	12.5	12.5				3.3	14.0
		BTU/h	42700	42700	42700				11300	47800
	CURRENT	A	0.20×4	0.19×4	0.19×4	17.3	16.7	16.2	-	-
	INPUT POWER	W	16×4	17×4	17×4	3.705k	3.705k	3.705k	-	-
		TOTAL W		-		3.770k	3.775k	3.775k	840	4.600k
	ANNUAL CONSUMPTION	TOTAL kWh ※4		-		-	1887.5	-	-	-
	EER/EER CLASS	TOTAL(W/W)※5("A"~"G")	-	-	-	3.32	3.31 / A	3.31	3.93	3.04
	Erp ※6 Pdsign	kW	-	-	-	-	-	-		
	Erp ※6 SEER	(W/W)	-	-	-	-	-	-		
	Erp ※6 Annual consumption	kWh	-	-	-	-	-	-		
	Erp ※6 Class		-	-	-	-	-	-		
	POWER FACTOR	%	-	-	-	97	96	95	-	-
	NOISE INDOOR (H/M/L)	dB-A		35/31/27						
		Power Level dB		52/46/41						
	NOISE OUTDOOR (H/L)	dB-A					53/-			
		Power Level dB					70/-			
HEATING	CAPACITY	kW	14.0	14.0	14.0				4.1	16.0
		BTU/h	47800	47800	47800				14000	54600
	CURRENT	A	0.20×4	0.19×4	0.19×4	17.3	16.7	16.2	-	-
	INPUT POWER	W	16×4	17×4	17×4	3.705k	3.705k	3.705k	-	-
		TOTAL W		-		3.770k	3.775k	3.775k	900	5.200k
	COP/COP CLASS	TOTAL(W/W)※5("A"~"G")	-	-	-	3.71	3.71 / A	3.71	4.56	3.08
	Erp ※6 Pdsign	kW	-	-	-	-	-	-		
	Erp ※6 Tbivalen	°C	-	-	-	-	-	-		
	Erp ※6 SCOP	(W/W)	-	-	-	-	-	-		
	Erp ※6 Annual consumption	kWh	-	-	-	-	-	-		
	Erp ※6 Class		-	-	-	-	-	-		
	POWER FACTOR	%	-	-	-	97	96	95	-	-
	NOISE INDOOR (H/M/L)	dB-A		35/31/27			-		/	/
		Power Level dB		52/46/41			-			
	NOISE OUTDOOR (H/L)	dB-A		-			53/-		/	/
		Power Level dB		-			70/-			
EXTRA LOW TEMP	Total CAPACITY(kW)/INPUT POWER(W)/COP					-				
MAX CURRENT(A)/MAX INPUT POWER(W)			0.20/16×4	0.19/17×4	0.19/17×4	28.0/6.000k	28.0/6.200k	28.0/6.400k	/	
STARTING CURRENT(A)/COMP OUTPUT(W)			-	-	-	17.3/3.0k	16.7/3.0k	16.2/3.00k	/	
NETWORK IMPEDANCE (ΩMAX.)				-			-			
FM OUTPUT (W)				47×4			90×2		/	
MOISTURE REMOVAL VOLUME		L/h(Pt/h)	7.9 (1.98×4)		(16.6)		-			
External static pressure		Pa		-						
I/D AIR FLOW	COOL	m^3/min (ft^3/min)		[11/9.5/7.5 (388/335/265)]×4						
	HEAT	m^3/min (ft^3/min)		[11/9.5/7.5 (388/335/265)]×4						
O/D AIR FLOW	COOL	m^3/min (ft^3/min)				130		(4591)		
	HEAT	m^3/min (ft^3/min)				110		(3885)		
REFRIGERANT TYPE, AMOUNT g(oz)						R410A	3.40k	(119.9)	/	
PROD	HEIGHT : H mm(inch)			300 (11-1/32)			1416 (55-3/4)		/	
	WIDTH : W mm(inch)			1065 (41-23/64)			940 (37-1/32)		/	
	DEPTH : D mm(inch)			230 (9-1/32)			340 (13-13/32)		/	
PACK	HEIGHT : H mm			310			1556		/	
	WIDTH : W mm			1140			1055		/	
	DEPTH : D mm			380			485		/	
MASS	(NET) kg(lb)			13 (29)			98 (216)		/	
	(GROSS) kg(lb)			17 (37)			108 (238)		/	
LAYERS LIMIT (actually)				15 (16)			1 (2)			
Operation Condition		Cool O.D(DBT)		18°C ~ 32°C			-15°C ~ 46°C			
		Heat O.D(DBT)		16°C ~ 30°C			-20°C ~ 24°C			
PIPING	PIPE DIAMETER mm (inch)		(Liquid)ø6.35(1/4) (Gas)ø12.7(1/2)			(Liquid)ø9.52(3/8) (Gas)ø15.88(5/8)				
	CONNECT METHOD, STD LENGTH m (ft)		flared type, 5.0(16.4)			flared type, 5.0(16.4)				
	PIPE LENGTH RANGE m (ft)			5 ~ 75 (16.4 ~ 246.1)					~	~
	I/D&O/D HEIGHT DIFFERENCE m (ft)		15 (OD located lower) / 30 (OD located higher) (49.2/98.4)							
	ADD GAS AMOUNT g/m (oz/ft)			50 (0.538)						
	PIPE LENGTH FOR ADDITIONAL GAS m (ft)			20 (65.6)						

*1: In case it is necessary to indicate the air □ow volume in (l/s), the value in (m^3/min.) shall be multiplied by 16.7 and rounded down the decimal point.
*2: If the EUROVENT Certi□ed models can be operated under the □extra-low□temperature condition, -7□C dry bulb and -8□C wet-bulb temperatures with rated voltage 230 V shall be used.
*3: Network Impedance shall be applicable for EUROPE and CHINA models.
*4: The annual consumption is calculated by multiplying the input power at 230 V (400 V) by an average of 500 hours per year in cooling mode.
*5: EER and COP classification is at 230 V (400 V) only in accordance with EU directive 2002/31/EC.
*6: SEER and SCOP classification is at 230V(400V) only in accordance with EN-14825. For heating, SCOP indicates the value of only Average heating season, Other fiche data indicates in an attached sheet.

Simultaneous (Triple) -Type

1-1. Unit Speci□cations

PE1

3. Wall Mounted Type S-45PK1E5A×3 / U-125PE1E5A

INDOOR		MODEL	S-45PK1E5A×3							
PANEL		MODEL	-			-				
OUTDOOR		MODEL				U-125PE1E5A				
Branch pipe		MODEL	CZ-P3HPC2							
PERFORMANCE TEST CONDITION			ISO5151 / EN14511 / EN12102							
POWER SUPPLY		ø, Hz	1ø 50Hz			1ø 50Hz				
		V	220	230	240	220	230	240	Min	Max
COOLING	CAPACITY	kW	12.5	12.5	12.5				3.3	14.0
		BTU/h	42700	42700	42700				11300	47800
	CURRENT	A	0.22×3	0.21×3	0.20×3	17.3	16.7	16.2	-	-
	INPUT POWER	W	20×3	20×3	20×3	3.705k	3.705k	3.705k	-	-
		TOTAL W		-		3.765k	3.765k	3.765k	840	4.600k
	ANNUAL CONSUMPTION	TOTAL kWh ※4		-		-	1882.5	-	-	-
	EER/EER CLASS	TOTAL(W/W)※5("A"~"G")	-	-	-	3.32	3.32 / A	3.32	3.93	3.04
	Erp ※6 Pdsign	kW	-	-	-	-	-	-		
	Erp ※6 SEER	(W/W)	-	-	-	-	-	-		
	Erp ※6 Annual consumption	kWh	-	-	-	-	-	-		
	Erp ※6 Class		-	-	-	-	-	-		
	POWER FACTOR	%	-	-	-	97	96	95	-	-
	NOISE INDOOR (H/M/L)	dB-A		38/34/30						
		Power Level dB		55/49/44						
	NOISE OUTDOOR (H/L)	dB-A					53/-			
		Power Level dB					70/-			
HEATING	CAPACITY	kW	14.0	14.0	14.0				4.1	16.0
		BTU/h	47800	47800	47800				14000	54600
	CURRENT	A	0.22×3	0.21×3	0.20×3	17.3	16.7	16.2	-	-
	INPUT POWER	W	20×3	20×3	20×3	3.705k	3.705k	3.705k	-	-
		TOTAL W		-		3.765k	3.765k	3.765k	900	5.200k
	COP/COP CLASS	TOTAL(W/W)※5("A"~"G")	-	-	-	3.72	3.72 / A	3.72	4.56	3.08
	Erp ※6 Pdsign	kW	-	-	-	-	-	-		
	Erp ※6 Tbivalen	°C	-	-	-	-	-	-		
	Erp ※6 SCOP	(W/W)	-	-	-	-	-	-		
	Erp ※6 Annual consumption	kWh	-	-	-	-	-	-		
	Erp ※6 Class		-	-	-	-	-	-		
	POWER FACTOR	%	-	-	-	97	96	95	-	-
	NOISE INDOOR (H/M/L)	dB-A		38/34/30			-		/	/
		Power Level dB		55/49/44			-			
	NOISE OUTDOOR (H/L)	dB-A		-			53/-		/	/
		Power Level dB		-			70/-			
EXTRA LOW TEMP	Total CAPACITY(kW)/INPUT POWER(W)/COP				-					
MAX CURRENT(A)/MAX INPUT POWER(W)			0.22×3/20×3	0.21×3/20×3	0.20×3/20×3	28.0/6.000k	28.0/6.200k	28.0/6.400k	/	
STARTING CURRENT(A)/COMP OUTPUT(W)			-	-	-	17.3/3.0k	16.7/3.0k	16.2/3.0k	/	
NETWORK IMPEDANCE (ΩMAX.)				-			-			
FM OUTPUT (W)				47×3			90×2		/	
MOISTURE REMOVAL VOLUME		L/h(Pt/h)	7.9 (2.63×3)		(16.6)		-			
External static pressure		Pa		-						
I/D AIR FLOW	COOL	m^3/min (ft^3/min)		[12/10.5/8.5 (424/371/300)]×3						
	HEAT	m^3/min (ft^3/min)		[12/10.5/8.5 (424/371/300)]×3						
O/D AIR FLOW	COOL	m^3/min (ft^3/min)				130		(4591)		
	HEAT	m^3/min (ft^3/min)				110		(3885)		
REFRIGERANT TYPE, AMOUNT g(oz)						R410A	3.40k	(119.9)	/	
PROD IM	HEIGHT : H mm(inch)			300 (11-1/32)			1416 (55-3/4)		/	
	WIDTH : W mm(inch)			1065 (41-23/64)			940 (37-1/32)		/	
	DEPTH : D mm(inch)			230 (9-1/32)			340 (13-13/32)		/	
PACK IM	HEIGHT : H mm			310			1556		/	
	WIDTH : W mm			1140			1055		/	
	DEPTH : D mm			380			485		/	
MASS	(NET) kg(lb)			13 (29)			98 (216)		/	
	(GROSS) kg(lb)			17 (37)			108 (238)		/	
LAYERS LIMIT (actually)				15 (16)			1 (2)			
Operation Condition		Cool O.D(DBT)		18°C ~ 32°C			-15°C ~ 46°C			
		Heat O.D(DBT)		16°C ~ 30°C			-20°C ~ 24°C			
PIPING	PIPE DIAMETER mm (inch)		(Liquid)ø6.35(1/4) (Gas)ø12.7(1/2)			(Liquid)ø9.52(3/8) (Gas)ø15.88(5/8)				
	CONNECT METHOD, STD LENGTH m (ft)		flared type, 5.0(16.4)			flared type, 5.0(16.4)				
	PIPE LENGTH RANGE m (ft)			5 ~ 75 (16.4 ~ 246.1)					~	~
	I/D&O/D HEIGHT DIFFERENCE m (ft)		15 (OD located lower) / 30 (OD located higher) (49.2/98.4)							
	ADD GAS AMOUNT g/m (oz/ft)			50 (0.538)						
	PIPE LENGTH FOR ADDITIONAL GAS m (ft)			20 (65.6)						

*1: In case it is necessary to indicate the air □ow volume in (l/s), the value in (m^3/min.) shall be multiplied by 16.7 and rounded down the decimal point.
*2: If the EUROVENT Certi□ed models can be operated under the □extra-low□temperature condition, -7□C dry bulb and -8□C wet-bulb temperatures with rated voltage 230 V shall be used.
*3: Network Impedance shall be applicable for EUROPE and CHINA models.
*4: The annual consumption is calculated by multiplying the input power at 230 V (400 V) by an average of 500 hours per year in cooling mode.
*5: EER and COP classification is at 230 V (400 V) only in accordance with EU directive 2002/31/EC.
*6: SEER and SCOP classification is at 230V(400V) only in accordance with EN-14825. For heating, SCOP indicates the value of only Average heating season, Other fiche data indicates in an attached sheet.

Single -Type

1-1. Unit Speci□cations

PE1

3. Wall Mounted Type S-50PK1E5A / U-50PE1E5

INDOOR		MODEL	S-50PK1E5A							
PANEL		MODEL	-			-				
OUTDOOR		MODEL				U-50PE1E5				
Branch pipe		MODEL	-							
PERFORMANCE TEST CONDITION			ISO5151 / EN14511 / EN14825 / EN12102							
POWER SUPPLY		ø, Hz	1ø 50Hz			1ø 50Hz				
		V	220	230	240	220	230	240	Min	Max
COOLING	CAPACITY	kW	5.0	5.0	5.0				1.5	5.6
		BTU/h	17100	17100	17100				5100	19100
	CURRENT	A	0.27	0.27	0.27	7.25	7.00	6.80	-	-
	INPUT POWER	W	26	27	28	1.530k	1.530k	1.530k	-	-
		TOTAL W		-		1.560k	1.560k	1.560k	260	2.250k
	ANNUAL CONSUMPTION	TOTAL kWh ※4		-		780	780	780	-	-
	EER/EER CLASS	TOTAL(W/W) ※5/("A"~"G")	-	-	-	3.21	3.21 / A	3.21	5.77	2.49
	Erp ※6	Pdsign kW	-	-	-	-	5.0	-		
		SEER (W/W)	-	-	-	-	6.0	-		
		Annual consumption kWh	-	-	-	-	292	-		
		Class	-	-	-	-	A+	-		
	POWER FACTOR	%	-	-	-	96	95	94	-	-
	NOISE INDOOR (H/M/L)	dB-A		40/36/32						
		Power Level dB		57/51/46						
	NOISE OUTDOOR (H/L)	dB-A					46/-			
		Power Level dB					65/-			
HEATING	CAPACITY	kW	5.6	5.6	5.6				1.5	6.5
		BTU/h	19100	19100	19100				5100	22200
	CURRENT	A	0.27	0.27	0.27	6.95	6.75	6.50	-	-
	INPUT POWER	W	26	27	28	1.470k	1.470k	1.470k	-	-
		TOTAL W		-		1.500k	1.500k	1.500k	220	2.450k
	COP/COP CLASS	TOTAL(W/W) ※5/("A"~"G")	-	-	-	3.73	3.73 / A	3.73	6.82	2.65
	Erp ※6	Pdsign kW	-	-	-	-	4.0	-		
		Tbivalen °C	-	-	-	-	-10	-		
		SCOP (W/W)	-	-	-	-	3.9	-		
		Annual consumption kWh	-	-	-	-	1436	-		
		Class	-	-	-	-	A	-		
	POWER FACTOR	%	-	-	-	96	95	94	-	-
	NOISE INDOOR (H/M/L)	dB-A		40/36/32			-		/	/
		Power Level dB		57/51/46			-			
	NOISE OUTDOOR (H/L)	dB-A		-			50/-		/	/
		Power Level dB		-			69/-			
EXTRA LOW TEMP	Total CAPACITY(kW)/INPUT POWER(W)/COP					-				
MAX CURRENT(A)/MAX INPUT POWER(W)			0.27/26	0.27/27	0.27/28	12/2.530k	12/2.620k	12/2.710k	/	
STARTING CURRENT(A)/COMP OUTPUT(W)			-	-	-	7.25/1.5k	7.00/1.5k	6.80/1.5k	/	
NETWORK IMPEDANCE (ΩMAX.)				-			-			
FM OUTPUT (W)				47			90		/	
MOISTURE REMOVAL VOLUME		L/h(Pt/h)	2.8		(5.9)		-			
External static pressure		Pa		-						
I/D AIR FLOW	COOL	m^3/min (ft^3/min)		14/12/10.5 (494/424/371)						
	HEAT	m^3/min (ft^3/min)		14/12/10.5 (494/424/371)						
O/D AIR FLOW	COOL	m^3/min (ft^3/min)				30		(1059)		
	HEAT	m^3/min (ft^3/min)				35		(1236)		
REFRIGERANT TYPE, AMOUNT g(oz)						R410A	1.65k	(58.2)	/	
PROD	HEIGHT : H mm(inch)			300 (11-1/32)			569 (22-13/32)		/	
	WIDTH : W mm(inch)			1065 (41-15/16)			790 (31-7/64)		/	
	DEPTH : D mm(inch)			230 (9-1/32)			285 (11-7/32)		/	
PACK	HEIGHT : H mm			310			645		/	
	WIDTH : W mm			1140			921		/	
	DEPTH : D mm			380			386		/	
MASS	(NET) kg(lb)			13 (29)			42 (93)		/	
	(GROSS) kg(lb)			17 (37)			46 (101)		/	
LAYERS LIMIT (actually)				15 (16)			4 (5)			
Operation Condition		Cool O.D(DBT)		18°C ~ 32°C			-15°C ~ 46°C			
		Heat O.D(DBT)		16°C ~ 30°C			-20°C ~ 24°C			
PIPING	PIPE DIAMETER mm (inch)		(Liquid)ø6.35(1/4) (Gas)ø12.7(1/2)			(Liquid)ø6.35(1/4) (Gas)ø12.7(1/2)				
	CONNECT METHOD, STD LENGTH m (ft)		flared type, 5.0(16.4)			flared type, 5.0(16.4)				
	PIPE LENGTH RANGE m (ft)			5 ~ 40 (16.4 ~ 131.2)					~	~
	I/D&O/D HEIGHT DIFFERENCE m (ft)		15 (OD located lower) /30 (OD located higher) (49.2/98.4)							
	ADD GAS AMOUNT g/m (oz/ft)			20 (0.215)						
	PIPE LENGTH FOR ADDITIONAL GAS m (ft)			30 (98.4)						

*1: In case it is necessary to indicate the air □ow volume in (l/s), the value in (m^3/min.) shall be multiplied by 16.7 and rounded down the decimal point.
*2: If the EUROVENT Certi□ed models can be operated under the □extra-low□temperature condition, -7□C dry bulb and -8□C wet-bulb temperatures with rated voltage 230 V shall be used.
*3: Network Impedance shall be applicable for EUROPE and CHINA models.
*4: The annual consumption is calculated by multiplying the input power at 230 V (400 V) by an average of 500 hours per year in cooling mode.
*5: EER and COP classification is at 230 V (400 V) only in accordance with EU directive 2002/31/EC.
*6: SEER and SCOP classification is at 230V(400V) only in accordance with EN-14825. For heating, SCOP indicates the value of only Average heating season, Other fiche data indicates in an attached sheet.

Simultaneous (Twin) -Type

1-1. Unit Specifications

PE1

3. Wall Mounted Type S-50PK1E5A×2 / U-100PE1E5A

INDOOR		MODEL	S-50PK1E5A×2							
PANEL		MODEL	-			-				
OUTDOOR		MODEL				U-100PE1E5A				
Branch pipe		MODEL	CZ-P155BK1							
PERFORMANCE TEST CONDITION			ISO5151 / EN14511 / EN14825 / EN12102							
POWER SUPPLY		ø, Hz	1ø 50Hz			1ø 50Hz				
		V	220	230	240	220	230	240	Min	Max
COOLING	CAPACITY	kW	10.0	10.0	10.0				3.3	12.5
		BTU/h	34100	34100	34100				11300	42700
	CURRENT	A	0.27×2	0.27×2	0.27×2	12.0	11.4	10.9	-	-
	INPUT POWER	W	26×2	27×2	28×2	2.525k	2.525k	2.525k	-	-
		TOTAL W		-		2.580k	2.580k	2.580k	840	3.700k
	ANNUAL CONSUMPTION	TOTAL kWh ※4		-		-	1290	-	-	-
	EER/EER CLASS	TOTAL(W/W)※5("A"~"G")	-	-	-	3.88	3.88 / A	3.88	3.93	3.38
	Erp ※6 Pdsign	kW	-	-	-	-	10.0	-		
	Erp ※6 SEER	(W/W)	-	-	-	-	6.2	-		
	Erp ※6 Annual consumption	kWh	-	-	-	-	564	-		
	Erp ※6 Class		-	-	-	-	A++	-		
	POWER FACTOR	%	-	-	-	96	96	96	-	-
	NOISE INDOOR (H/M/L)	dB-A		40/36/32						
		Power Level dB		57/51/46						
	NOISE OUTDOOR (H/L)	dB-A					52/-			
		Power Level dB					69/-			
HEATING	CAPACITY	kW	11.2	11.2	11.2				4.1	14.0
		BTU/h	38200	38200	38200				14000	47800
	CURRENT	A	0.27×2	0.27×2	0.27×2	13.1	12.5	12.0	-	-
	INPUT POWER	W	26×2	27×2	28×2	2.705k	2.705k	2.705k	-	-
		TOTAL W		-		2.760k	2.760k	2.760k	900	4.400k
	COP/COP CLASS	TOTAL(W/W)※5("A"~"G")	-	-	-	4.06	4.06 / A	4.06	4.56	3.18
	Erp ※6 Pdsign	kW	-	-	-	-	10.0	-		
	Erp ※6 Tbivalen	°C	-	-	-	-	-10	-		
	Erp ※6 SCOP	(W/W)	-	-	-	-	4.0	-		
	Erp ※6 Annual consumption	kWh	-	-	-	-	3500	-		
	Erp ※6 Class		-	-	-	-	A+	-		
	POWER FACTOR	%	-	-	-	94	94	94	-	-
	NOISE INDOOR (H/M/L)	dB-A		40/36/32			-		/	/
		Power Level dB		57/51/46			-			
	NOISE OUTDOOR (H/L)	dB-A		-			52/-		/	/
		Power Level dB		-			69/-			
EXTRA LOW TEMP	Total CAPACITY(kW)/INPUT POWER(W)/COP				-					
MAX CURRENT(A)/MAX INPUT POWER(W)			0.27×2/26×2	0.27×2/27×2	0.27×2/28×2	25.0/5.350k	25.0/5.550k	25.0/5.570k	/	
STARTING CURRENT(A)/COMP OUTPUT(W)			-	-	-	13.1/3.0k	12.5/3.0k	12.0/3.0k	/	
NETWORK IMPEDANCE (ΩMAX.)				-			-			
FM OUTPUT (W)				47×2			90×2		/	
MOISTURE REMOVAL VOLUME		L/h(Pt/h)	6.0 (3.0×2)		(12.6)		-			
External static pressure		Pa		-						
I/D AIR FLOW	COOL	m^3/min (ft^3/min)		[14/12/10.5 (494/424/371)]×2						
	HEAT	m^3/min (ft^3/min)		[14/12/10.5 (494/424/371)]×2						
O/D AIR FLOW	COOL	m^3/min (ft^3/min)					110 (3885)			
	HEAT	m^3/min (ft^3/min)					95 (3355)			
REFRIGERANT TYPE, AMOUNT g(oz)						R410A	3.40k	(119.9)	/	
PROD IM	HEIGHT : H mm(inch)			300 (11-1/32)			1416 (55-3/4)		/	
	WIDTH : W mm(inch)			1065 (41-23/64)			940 (37-1/32)		/	
	DEPTH : D mm(inch)			230 (9-1/32)			340 (13-13/32)		/	
PAC DIM	HEIGHT : H mm			310			1556		/	
	WIDTH : W mm			1140			1055		/	
	DEPTH : D mm			380			485		/	
MASS	(NET) kg(lb)			13 (29)			98 (216)		/	
	(GROSS) kg(lb)			17 (37)			108 (238)		/	
LAYERS LIMIT (actually)				15 (16)			1 (2)			
Operation Condition		Cool O.D(DBT)		18°C ~ 32°C			-15°C ~ 46°C			
		Heat O.D(DBT)		16°C ~ 30°C			-20°C ~ 24°C			
PIPING	PIPE DIAMETER mm (inch)		(Liquid)ø6.35(1/4) (Gas)ø12.7(1/2)			(Liquid)ø9.52(3/8) (Gas)ø15.88(5/8)				
	CONNECT METHOD, STD LENGTH m (ft)		flared type, 5.0(16.4)			flared type, 5.0(16.4)				
	PIPE LENGTH RANGE m (ft)			5 ~ 75 (16.4 ~ 246.1)					~	~
	I/D&O/D HEIGHT DIFFERENCE m (ft)		15 (OD located lower) / 30 (OD located higher) (49.2/98.4)							
	ADD GAS AMOUNT g/m (oz/ft)			50 (0.538)						
	PIPE LENGTH FOR ADDITIONAL GAS m (ft)			30 (98.4)						

*1: In case it is necessary to indicate the air flow volume in (l/s), the value in (m^3/min.) shall be multiplied by 16.7 and rounded down the decimal point.
*2: If the EUROVENT Certified models can be operated under the "extra-low" temperature condition, -7°C dry bulb and -8°C wet-bulb temperatures with rated voltage 230 V shall be used.
*3: Network Impedance shall be applicable for EUROPE and CHINA models.
*4: The annual consumption is calculated by multiplying the input power at 230 V (400 V) by an average of 500 hours per year in cooling mode.
*5: EER and COP classification is at 230 V (400 V) only in accordance with EU directive 2002/31/EC.
*6: SEER and SCOP classification is at 230V(400V) only in accordance with EN-14825. For heating, SCOP indicates the value of only Average heating season, Other fiche data indicates in an attached sheet.

Simultaneous (Triple) -Type

1-1. Unit Speci□cations

PE1

3. Wall Mounted Type S-50PK1E5A×3 / U-140PE1E5A

INDOOR		MODEL	S-50PK1E5A×3							
PANEL		MODEL	-			-				
OUTDOOR		MODEL				U-140PE1E5A				
Branch pipe		MODEL	CZ-P3HPC2							
PERFORMANCE TEST CONDITION			ISO5151 / EN14511 / EN12102							
POWER SUPPLY		ø, Hz	1ø 50Hz			1ø 50Hz				
		V	220	230	240	220	230	240	Min	Max
COOLING	CAPACITY	kW	14.0	14.0	14.0				3.3	15.5
		BTU/h	47800	47800	47800				11300	52900
	CURRENT	A	0.27×3	0.27×3	0.27×3	21.3	20.6	20.0	-	-
	INPUT POWER	W	26×3	27×3	28×3	4.565k	4.565k	4.565k	-	-
		TOTAL W		-		4.645k	4.650k	4.650k	840	6.000k
	ANNUAL CONSUMPTION	TOTAL kWh ※4		-		-	2325	-	-	-
	EER/EER CLASS	TOTAL(W/W)※5("A"~"G")	-	-	-	3.01	3.01 / C	3.01	3.93	2.58
	Erp ※6 Pdsign	kW	-	-	-	-	-	-		
	Erp ※6 SEER	(W/W)	-	-	-	-	-	-		
	Erp ※6 Annual consumption	kWh	-	-	-	-	-	-		
	Erp ※6 Class		-	-	-	-	-	-		
	POWER FACTOR	%	-	-	-	97	96	95	-	-
	NOISE INDOOR (H/M/L)	dB-A		40/36/32						
		Power Level dB		57/51/46						
	NOISE OUTDOOR (H/L)	dB-A					54/-			
		Power Level dB					71/-			
HEATING	CAPACITY	kW	16.0	16.0	16.0				4.1	18.0
		BTU/h	54600	54600	54600				14000	61400
	CURRENT	A	0.27×3	0.27×3	0.27×3	21.9	21.2	20.5	-	-
	INPUT POWER	W	26×3	27×3	28×3	4.685k	4.685k	4.685k	-	-
		TOTAL W		-		4.765k	4.770k	4.770k	900	5.900k
	COP/COP CLASS	TOTAL(W/W)※5("A"~"G")	-	-	-	3.36	3.35 / C	3.35	4.56	3.05
	Erp ※6 Pdsign	kW	-	-	-	-	-	-		
	Erp ※6 Tbivalen	°C	-	-	-	-	-	-		
	Erp ※6 SCOP	(W/W)	-	-	-	-	-	-		
	Erp ※6 Annual consumption	kWh	-	-	-	-	-	-		
	Erp ※6 Class		-	-	-	-	-	-		
	POWER FACTOR	%	-	-	-	97	96	95	-	-
	NOISE INDOOR (H/M/L)	dB-A		40/36/32			-		/	/
		Power Level dB		57/51/46			-			
	NOISE OUTDOOR (H/L)	dB-A		-			55/-		/	/
		Power Level dB		-			71/-			
EXTRA LOW TEMP	Total CAPACITY(kW)/INPUT POWER(W)/COP				-					
MAX CURRENT(A)/MAX INPUT POWER(W)			0.27×3/26×3	0.27×3/27×3	0.27×3/28×3	30.0/6.450k	30.0/6.650k	30.0/6.850k	/	
STARTING CURRENT(A)/COMP OUTPUT(W)			-	-	-	21.9/3.0k	21.2/3.0k	20.5/3.0k	/	
NETWORK IMPEDANCE (ΩMAX.)				-			-			
FM OUTPUT (W)				47×3			90×2		/	
MOISTURE REMOVAL VOLUME		L/h(Pt/h)	9.0 (3.0×3)		(18.9)		-			
External static pressure		Pa		-						
I/D AIR FLOW	COOL	m^3/min (ft^3/min)		[14/12/10.5 (494/424/371)]×3						
	HEAT	m^3/min (ft^3/min)		[14/12/10.5 (494/424/371)]×3						
O/D AIR FLOW	COOL	m^3/min (ft^3/min)				135		(4767)		
	HEAT	m^3/min (ft^3/min)				120		(4238)		
REFRIGERANT TYPE, AMOUNT g(oz)						R410A	3.40k	(119.9)	/	
PROD IM	HEIGHT : H mm(inch)			300 (11-1/32)			1416 (55-3/4)		/	
	WIDTH : W mm(inch)			1065 (41-23/64)			940 (37-1/32)		/	
	DEPTH : D mm(inch)			230 (9-1/32)			340 (13-13/32)		/	
PAC D IM	HEIGHT : H mm			310			1556		/	
	WIDTH : W mm			1140			1055		/	
	DEPTH : D mm			380			485		/	
MASS	(NET) kg(lb)			13 (29)			98 (216)		/	
	(GROSS) kg(lb)			17 (37)			108 (238)		/	
LAYERS LIMIT (actually)				15 (16)			1 (2)			
Operation Condition		Cool O.D(DBT)		18°C ~ 32°C			-15°C ~ 46°C			
		Heat O.D(DBT)		16°C ~ 30°C			-20°C ~ 24°C			
PIPING	PIPE DIAMETER mm (inch)		(Liquid)ø6.35(1/4) (Gas)ø12.7(1/2)			(Liquid)ø9.52(3/8) (Gas)ø15.88(5/8)				
	CONNECT METHOD, STD LENGTH m (ft)		flared type, 5.0(16.4)			flared type, 5.0(16.4)				
	PIPE LENGTH RANGE m (ft)			5 ~ 75 (16.4 ~ 246.1)					~	~
	I/D&O/D HEIGHT DIFFERENCE m (ft)		15 (OD located lower) / 30 (OD located higher) (49.2/98.4)							
	ADD GAS AMOUNT g/m (oz/ft)			50 (0.538)						
	PIPE LENGTH FOR ADDITIONAL GAS m (ft)			20 (65.6)						

*1: In case it is necessary to indicate the air □ow volume in (l/s), the value in (m^3/min.) shall be multiplied by 16.7 and rounded down the decimal point.
*2: If the EUROVENT Certi□ed models can be operated under the □extra-low□temperature condition, -7□C dry bulb and -8□C wet-bulb temperatures with rated voltage 230 V shall be used.
*3: Network Impedance shall be applicable for EUROPE and CHINA models.
*4: The annual consumption is calculated by multiplying the input power at 230 V (400 V) by an average of 500 hours per year in cooling mode.
*5: EER and COP classification is at 230 V (400 V) only in accordance with EU directive 2002/31/EC.
*6: SEER and SCOP classification is at 230V(400V) only in accordance with EN-14825. For heating, SCOP indicates the value of only Average heating season, Other fiche data indicates in an attached sheet.

Single -Type

1-1. Unit Speci□cations

PE1

3. Wall Mounted Type S-60PK1E5A / U-60PE1E5A

INDOOR		MODEL	S-60PK1E5A							
PANEL		MODEL	-			-				
OUTDOOR		MODEL				U-60PE1E5A				
Branch pipe		MODEL	-							
PERFORMANCE TEST CONDITION			ISO5151 / EN14511 / EN14825 / EN12102							
POWER SUPPLY		ø, Hz	1ø 50Hz			1ø 50Hz				
		V	220	230	240	220	230	240	Min	Max
COOLING	CAPACITY	kW	6.0	6.0	6.0				2.5	7.1
		BTU/h	20500	20500	20500				8500	24200
	CURRENT	A	0.59	0.58	0.52	7.45	7.15	6.95	-	-
	INPUT POWER	W	57	57	57	1.500k	1.500k	1.500k	-	-
		TOTAL W		-		1.560k	1.560k	1.560k	450	2.000k
	ANNUAL CONSUMPTION	TOTAL kWh ※4		-		-	780	-	-	-
	EER/EER CLASS	TOTAL(W/W)※5("A"~"G")	-	-	-	3.85	3.85 / A	3.85	5.56	3.55
	Erp ※6 Pdsign	kW	-	-	-	-	6.0	-		
	Erp ※6 SEER	(W/W)	-	-	-	-	6.6	-		
	Erp ※6 Annual consumption	kWh	-	-	-	-	318	-		
	Erp ※6 Class		-	-	-	-	A++	-		
	POWER FACTOR	%	-	-	-	92	91	90	-	-
	NOISE INDOOR (H/M/L)	dB-A		47/44/40						
		Power Level dB		64/59/54						
	NOISE OUTDOOR (H/L)	dB-A					48/-			
		Power Level dB					65/-			
HEATING	CAPACITY	kW	7.0	7.0	7.0				2.0	8.0
		BTU/h	23900	23900	23900				6800	27300
	CURRENT	A	0.59	0.58	0.52	8.45	8.15	7.90	-	-
	INPUT POWER	W	57	57	57	1.760k	1.760k	1.760k	-	-
		TOTAL W		-		1.820k	1.820k	1.820k	400	2.480k
	COP/COP CLASS	TOTAL(W/W)※5("A"~"G")	-	-	-	3.85	3.85 / A	3.85	5.00	3.23
	Erp ※6 Pdsign	kW	-	-	-	-	6.0	-		
	Erp ※6 Tbivalen	°C	-	-	-	-	-10	-		
	Erp ※6 SCOP	(W/W)	-	-	-	-	3.9	-		
	Erp ※6 Annual consumption	kWh	-	-	-	-	2154	-		
	Erp ※6 Class		-	-	-	-	A	-		
	POWER FACTOR	%	-	-	-	95	94	93	-	-
	NOISE INDOOR (H/M/L)	dB-A		47/44/40			-		/	/
		Power Level dB		64/59/54			-			
	NOISE OUTDOOR (H/L)	dB-A		-			50/-		/	/
		Power Level dB		-			67/-			
EXTRA LOW TEMP	Total CAPACITY(kW)/INPUT POWER(W)/COP					-				
MAX CURRENT(A)/MAX INPUT POWER(W)			0.59/57	0.58/57	0.52/57	18.0/3.800k	18.0/3.930k	18.0/4.060k	/	
STARTING CURRENT(A)/COMP OUTPUT(W)			-	-	-	8.45/1.7k	8.15/1.7k	7.90/1.7k	/	
NETWORK IMPEDANCE (ΩMAX.)				-			-			
FM OUTPUT (W)				47			90		/	
MOISTURE REMOVAL VOLUME		L/h(Pt/h)	3.4		(7.1)		-			
External static pressure		Pa		-						
I/D AIR FLOW	COOL	m^3/min (ft^3/min)		18/14.5/11.5 (636/512/406)						
	HEAT	m^3/min (ft^3/min)		18/14.5/11.5 (636/512/406)						
O/D AIR FLOW	COOL	m^3/min (ft^3/min)				60		(2119)		
	HEAT	m^3/min (ft^3/min)				60		(2119)		
REFRIGERANT TYPE, AMOUNT g(oz)						R410A	2.00k	(70.5)	/	
PROD IM	HEIGHT : H mm(inch)			300 (11-1/32)			996 (39-7/32)		/	
	WIDTH : W mm(inch)			1065 (41-23/64)			940 (37-1/32)		/	
	DEPTH : D mm(inch)			230 (9-1/32)			340 (13-13/32)		/	
PACK IM	HEIGHT : H mm			310			1136		/	
	WIDTH : W mm			1140			1055		/	
	DEPTH : D mm			380			485		/	
MASS	(NET) kg(lb)			14.5 (32)			68 (150)		/	
	(GROSS) kg(lb)			18 (40)			76 (168)		/	
LAYERS LIMIT (actually)				15 (16)			2 (3)			
Operation Condition		Cool O.D(DBT)		18°C ~ 32°C			-15°C ~ 46°C			
		Heat O.D(DBT)		16°C ~ 30°C			-20°C ~ 24°C			
PIPING	PIPE DIAMETER mm (inch)		(Liquid)ø9.52(3/8) (Gas)ø15.88(5/8)			(Liquid)ø9.52(3/8) (Gas)ø15.88(5/8)				
	CONNECT METHOD, STD LENGTH m (ft)		flared type, 5.0(16.4)			flared type, 5.0(16.4)				
	PIPE LENGTH RANGE m (ft)			5 ~ 50 (16.4 ~ 164.0)					~	~
	I/D&O/D HEIGHT DIFFERENCE m (ft)		15 (OD located lower) / 30 (OD located higher) (49.2/98.4)							
	ADD GAS AMOUNT g/m (oz/ft)			50 (0.538)						
	PIPE LENGTH FOR ADDITIONAL GAS m (ft)			30 (98.4)						

*1: In case it is necessary to indicate the air □ow volume in (l/s), the value in (m^3/min.) shall be multiplied by 16.7 and rounded down the decimal point.
*2: If the EUROVENT Certi□ed models can be operated under the □extra-low□temperature condition, -7□C dry bulb and -8□C wet-bulb temperatures with rated voltage 230 V shall be used.
*3: Network Impedance shall be applicable for EUROPE and CHINA models.
*4: The annual consumption is calculated by multiplying the input power at 230 V (400 V) by an average of 500 hours per year in cooling mode.
*5: EER and COP classification is at 230 V (400 V) only in accordance with EU directive 2002/31/EC.
*6: SEER and SCOP classification is at 230V(400V) only in accordance with EN-14825. For heating, SCOP indicates the value of only Average heating season, Other fiche data indicates in an attached sheet.

Simultaneous (Twin) -Type

1-1. Unit Speci□cations

PE1

3. Wall Mounted Type S-60PK1E5A×2 / U-125PE1E5A

INDOOR		MODEL	S-60PK1E5A×2							
PANEL		MODEL	-			-				
OUTDOOR		MODEL				U-125PE1E5A				
Branch pipe		MODEL	CZ-P155BK1							
PERFORMANCE TEST CONDITION			ISO5151 / EN14511 / EN12102							
POWER SUPPLY		ø, Hz	1ø 50Hz			1ø 50Hz				
		V	220	230	240	220	230	240	Min	Max
COOLING	CAPACITY	kW	12.5	12.5	12.5				3.3	14.0
		BTU/h	42700	42700	42700				11300	47800
	CURRENT	A	0.59×2	0.58×2	0.52×2	17.3	16.7	16.2	-	-
	INPUT POWER	W	57×2	57×2	57×2	3.705k	3.705k	3.705k	-	-
		TOTAL W		-		3.820k	3.820k	3.820k	840	4.600k
	ANNUAL CONSUMPTION	TOTAL kWh ※4		-		-	1910	-	-	-
	EER/EER CLASS	TOTAL(W/W)※5("A"~"G")	-	-	-	3.27	3.27 / A	3.27	3.93	3.04
	Erp ※6 Pdsign	kW	-	-	-	-	-	-		
	Erp ※6 SEER	(W/W)	-	-	-	-	-	-		
	Erp ※6 Annual consumption	kWh	-	-	-	-	-	-		
	Erp ※6 Class		-	-	-	-	-	-		
	POWER FACTOR	%	-	-	-	97	96	95	-	-
	NOISE INDOOR (H/M/L)	dB-A		47/44/40						
		Power Level dB		64/59/54						
	NOISE OUTDOOR (H/L)	dB-A					53/-			
		Power Level dB					70/-			
HEATING	CAPACITY	kW	14.0	14.0	14.0				4.1	16.0
		BTU/h	47800	47800	47800				14000	54600
	CURRENT	A	0.59×2	0.58×2	0.52×2	17.3	16.7	16.2	-	-
	INPUT POWER	W	57×2	57×2	57×2	3.705k	3.705k	3.705k	-	-
		TOTAL W		-		3.820k	3.820k	3.820k	900	5.200k
	COP/COP CLASS	TOTAL(W/W)※5("A"~"G")	-	-	-	3.66	3.66 / A	3.66	4.56	3.08
	Erp ※6 Pdsign	kW	-	-	-	-	-	-		
	Erp ※6 Tbivalen	°C	-	-	-	-	-	-		
	Erp ※6 SCOP	(W/W)	-	-	-	-	-	-		
	Erp ※6 Annual consumption	kWh	-	-	-	-	-	-		
	Erp ※6 Class		-	-	-	-	-	-		
	POWER FACTOR	%	-	-	-	97	96	95	-	-
	NOISE INDOOR (H/M/L)	dB-A		47/44/40			-		/	/
		Power Level dB		64/59/54			-			
	NOISE OUTDOOR (H/L)	dB-A		-			53/-		/	/
		Power Level dB		-			70/-			
EXTRA LOW TEMP	Total CAPACITY(kW)/INPUT POWER(W)/COP				-					
MAX CURRENT(A)/MAX INPUT POWER(W)			0.59×2/57×2	0.58×2/57×2	0.52×2/57×2	28.0/6.000k	28.0/6.200k	28.0/6.400k	/	
STARTING CURRENT(A)/COMP OUTPUT(W)			-	-	-	17.3/3.0k	16.7/3.0k	16.2/3.0k	/	
NETWORK IMPEDANCE (ΩMAX.)				-			-			
FM OUTPUT (W)				47×2			90×2		/	
MOISTURE REMOVAL VOLUME		L/h(Pt/h)	7.9 (3.95×2)		(16.6)		-			
External static pressure		Pa		-						
I/D AIR FLOW	COOL	m^3/min (ft^3/min)	[18/14.5/11.5 (636/512/406)]×2							
	HEAT	m^3/min (ft^3/min)	[18/14.5/11.5 (636/512/406)]×2							
O/D AIR FLOW	COOL	m^3/min (ft^3/min)				130		(4591)		
	HEAT	m^3/min (ft^3/min)				110		(3885)		
REFRIGERANT TYPE, AMOUNT g(oz)						R410A	3.40k	(119.9)	/	
PROD IM	HEIGHT : H mm(inch)		300 (11-1/32)			1416 (55-3/4)			/	
	WIDTH : W mm(inch)		1065 (41-23/64)			940 (37-1/32)			/	
	DEPTH : D mm(inch)		230 (9-1/32)			340 (13-13/32)			/	
PAC D IM	HEIGHT : H mm		310			1556			/	
	WIDTH : W mm		1140			1055			/	
	DEPTH : D mm		380			485			/	
MASS	(NET) kg(lb)		14.5 (32)			98 (216)			/	
	(GROSS) kg(lb)		18 (40)			108 (238)			/	
LAYERS LIMIT (actually)			15 (16)			1 (2)				
Operation Condition		Cool O.D(DBT)	18°C ~ 32°C			-15°C ~ 46°C				
		Heat O.D(DBT)	16°C ~ 30°C			-20°C ~ 24°C				
PIPING	PIPE DIAMETER mm (inch)		(Liquid)ø9.52(3/8) (Gas)ø15.88(5/8)			(Liquid)ø9.52(3/8) (Gas)ø15.88(5/8)				
	CONNECT METHOD, STD LENGTH m (ft)		flared type, 5.0(16.4)			flared type, 5.0(16.4)				
	PIPE LENGTH RANGE m (ft)		5 ~ 75 (16.4 ~ 246.1)						~	~
	I/D&O/D HEIGHT DIFFERENCE m (ft)		15 (OD located lower) / 30 (OD located higher) (49.2/98.4)							
	ADD GAS AMOUNT g/m (oz/ft)		50 (0.538)							
	PIPE LENGTH FOR ADDITIONAL GAS m (ft)		30 (98.4)							

*1: In case it is necessary to indicate the air □ow volume in (l/s), the value in (m^3/min.) shall be multiplied by 16.7 and rounded down the decimal point.
*2: If the EUROVENT Certi□ed models can be operated under the □extra-low□temperature condition, -7□C dry bulb and -8□C wet-bulb temperatures with rated voltage 230 V shall be used.
*3: Network Impedance shall be applicable for EUROPE and CHINA models.
*4: The annual consumption is calculated by multiplying the input power at 230 V (400 V) by an average of 500 hours per year in cooling mode.
*5: EER and COP classification is at 230 V (400 V) only in accordance with EU directive 2002/31/EC.
*6: SEER and SCOP classification is at 230V(400V) only in accordance with EN-14825. For heating, SCOP indicates the value of only Average heating season, Other fiche data indicates in an attached sheet.

Single -Type

1-1. Unit Speci□cations

PE1

3. Wall Mounted Type S-71PK1E5A / U-71PE1E5A

INDOOR		MODEL	S-71PK1E5A							
PANEL		MODEL	-			-				
OUTDOOR		MODEL				U-71PE1E5A				
Branch pipe		MODEL	-							
PERFORMANCE TEST CONDITION			ISO5151 / EN14511 / EN14825 / EN12102							
POWER SUPPLY		ø, Hz	1ø 50Hz			1ø 50Hz				
		V	220	230	240	220	230	240	Min	Max
COOLING	CAPACITY	kW	7.1	7.1	7.1				2.5	8.0
		BTU/h	24200	24200	24200				8500	27300
	CURRENT	A	0.59	0.58	0.52	9.75	9.40	9.10	-	-
	INPUT POWER	W	57	57	57	2.030k	2.030k	2.030k	-	-
		TOTAL W		-		2.090k	2.090k	2.090k	450	2.650k
	ANNUAL CONSUMPTION	TOTAL kWh ※4		-		-	1045	-	-	-
	EER/EER CLASS	TOTAL(W/W)※5("A"~"G")	-	-	-	3.40	3.40 / A	3.40	5.56	3.02
	Erp ※6 Pdsign	kW	-	-	-	-	7.1	-		
	Erp ※6 SEER	(W/W)	-	-	-	-	6.6	-		
	Erp ※6 Annual consumption	kWh	-	-	-	-	376	-		
	Erp ※6 Class		-	-	-	-	A++	-		
	POWER FACTOR	%	-	-	-	95	94	93	-	-
	NOISE INDOOR (H/M/L)	dB-A		47/44/40						
		Power Level dB		64/59/54						
	NOISE OUTDOOR (H/L)	dB-A					48/-			
		Power Level dB					65/-			
HEATING	CAPACITY	kW	8.0	8.0	8.0				2.0	9.0
		BTU/h	27300	27300	27300				6800	30700
	CURRENT	A	0.59	0.58	0.52	9.85	9.50	9.20	-	-
	INPUT POWER	W	57	57	57	2.070k	2.070k	2.070k	-	-
		TOTAL W		-		2.130k	2.130k	2.130k	400	2.900k
	COP/COP CLASS	TOTAL(W/W)※5("A"~"G")	-	-	-	3.76	3.76 / A	3.76	5.00	3.10
	Erp ※6 Pdsign	kW	-	-	-	-	7.1	-		
	Erp ※6 Tbivalen	°C	-	-	-	-	-9	-		
	Erp ※6 SCOP	(W/W)	-	-	-	-	3.9	-		
	Erp ※6 Annual consumption	kWh	-	-	-	-	2548	-		
	Erp ※6 Class		-	-	-	-	A	-		
	POWER FACTOR	%	-	-	-	96	95	94	-	-
	NOISE INDOOR (H/M/L)	dB-A		47/44/40			-		/	/
		Power Level dB		64/59/54			-			
	NOISE OUTDOOR (H/L)	dB-A		-			50/-		/	/
		Power Level dB		-			67/-			
EXTRA LOW TEMP	Total CAPACITY(kW)/INPUT POWER(W)/COP					-				
MAX CURRENT(A)/MAX INPUT POWER(W)			0.59/57	0.58/57	0.52/57	18.0/3.800k	18.0/3.930k	18.0/4.060k	/	
STARTING CURRENT(A)/COMP OUTPUT(W)			-	-	-	9.85/2.0k	9.50/2.0k	9.20/2.0k	/	
NETWORK IMPEDANCE (ΩMAX.)				-			-			
FM OUTPUT (W)				47			90		/	
MOISTURE REMOVAL VOLUME		L/h(Pt/h)	4.2		(8.8)		-			
External static pressure		Pa		-						
I/D AIR FLOW	COOL	m^3/min (ft^3/min)		18/14.5/11.5 (636/512/406)						
	HEAT	m^3/min (ft^3/min)		18/14.5/11.5 (636/512/406)						
O/D AIR FLOW	COOL	m^3/min (ft^3/min)				60		(2119)		
	HEAT	m^3/min (ft^3/min)				60		(2119)		
REFRIGERANT TYPE, AMOUNT g(oz)						R410A	2.35k	(82.9)	/	
PROD IM	HEIGHT : H mm(inch)			300 (11-1/32)			996 (39-7/32)		/	
	WIDTH : W mm(inch)			1065 (41-23/64)			940 (37-1/32)		/	
	DEPTH : D mm(inch)			230 (9-1/32)			340 (13-13/32)		/	
PACK IM	HEIGHT : H mm			310			1136		/	
	WIDTH : W mm			1140			1055		/	
	DEPTH : D mm			380			485		/	
MASS	(NET) kg(lb)			14.5 (32)			69 (152)		/	
	(GROSS) kg(lb)			18 (40)			77 (170)		/	
LAYERS LIMIT (actually)				15 (16)			2 (3)			
Operation Condition		Cool O.D(DBT)		18°C ~ 32°C			-15°C ~ 46°C			
		Heat O.D(DBT)		16°C ~ 30°C			-20°C ~ 24°C			
PIPING	PIPE DIAMETER mm (inch)		(Liquid)ø9.52(3/8) (Gas)ø15.88(5/8)			(Liquid)ø9.52(3/8) (Gas)ø15.88(5/8)				
	CONNECT METHOD, STD LENGTH m (ft)		flared type, 5.0(16.4)			flared type, 5.0(16.4)				
	PIPE LENGTH RANGE m (ft)			5 ~ 50 (16.4 ~ 164.0)					~	~
	I/D&O/D HEIGHT DIFFERENCE m (ft)		15 (OD located lower) / 30 (OD located higher) (49.2/98.4)							
	ADD GAS AMOUNT g/m (oz/ft)			50 (0.538)						
	PIPE LENGTH FOR ADDITIONAL GAS m (ft)			30 (98.4)						

*1: In case it is necessary to indicate the air □ow volume in (l/s), the value in (m^3/min.) shall be multiplied by 16.7 and rounded down the decimal point.
*2: If the EUROVENT Certi□ed models can be operated under the □extra-low□temperature condition, -7□C dry bulb and -8□C wet-bulb temperatures with rated voltage 230 V shall be used.
*3: Network Impedance shall be applicable for EUROPE and CHINA models.
*4: The annual consumption is calculated by multiplying the input power at 230 V (400 V) by an average of 500 hours per year in cooling mode.
*5: EER and COP classification is at 230 V (400 V) only in accordance with EU directive 2002/31/EC.
*6: SEER and SCOP classification is at 230V(400V) only in accordance with EN-14825. For heating, SCOP indicates the value of only Average heating season, Other fiche data indicates in an attached sheet.

Simultaneous (Twin) -Type

1-1. Unit Speci□cations

PE1

3. Wall Mounted Type S-71PK1E5A×2 / U-140PE1E5A

INDOOR		MODEL	S-71PK1E5A×2							
PANEL		MODEL	-			-				
OUTDOOR		MODEL				U-140PE1E5A				
Branch pipe		MODEL	CZ-P155BK1							
PERFORMANCE TEST CONDITION			ISO5151 / EN14511 / EN12102							
POWER SUPPLY		ø, Hz	1ø 50Hz			1ø 50Hz				
		V	220	230	240	220	230	240	Min	Max
COOLING	CAPACITY	kW	14.0	14.0	14.0				3.3	15.5
		BTU/h	47800	47800	47800				11300	52900
	CURRENT	A	0.59×2	0.58×2	0.52×2	21.3	20.6	20.0	-	-
	INPUT POWER	W	57×2	57×2	57×2	4.565k	4.565k	4.565k	-	-
		TOTAL W		-		4.680k	4.680k	4.680k	840	6.000k
	ANNUAL CONSUMPTION	TOTAL kWh ※4		-		-	2340	-	-	-
	EER/EER CLASS	TOTAL(W/W)※5("A"~"G")	-	-	-	2.99	2.99 / C	2.99	3.93	2.58
	Erp ※6 Pdsign	kW	-	-	-	-	-	-		
	Erp ※6 SEER	(W/W)	-	-	-	-	-	-		
	Erp ※6 Annual consumption	kWh	-	-	-	-	-	-		
	Erp ※6 Class		-	-	-	-	-	-		
	POWER FACTOR	%	-	-	-	97	96	95	-	-
	NOISE INDOOR (H/M/L)	dB-A		47/44/40						
		Power Level dB		64/59/54						
	NOISE OUTDOOR (H/L)	dB-A					54/-			
		Power Level dB					71/-			
HEATING	CAPACITY	kW	16.0	16.0	16.0				4.1	18.0
		BTU/h	54600	54600	54600				14000	61400
	CURRENT	A	0.59×2	0.58×2	0.52×2	21.9	21.2	20.5	-	-
	INPUT POWER	W	57×2	57×2	57×2	4.685k	4.685k	4.685k	-	-
		TOTAL W		-		4.800k	4.800k	4.800k	900	5.900k
	COP/COP CLASS	TOTAL(W/W)※5("A"~"G")	-	-	-	3.33	3.33 / C	3.33	4.56	3.05
	Erp ※6 Pdsign	kW	-	-	-	-	-	-		
	Erp ※6 Tbivalen	°C	-	-	-	-	-	-		
	Erp ※6 SCOP	(W/W)	-	-	-	-	-	-		
	Erp ※6 Annual consumption	kWh	-	-	-	-	-	-		
	Erp ※6 Class		-	-	-	-	-	-		
	POWER FACTOR	%	-	-	-	97	96	95	-	-
	NOISE INDOOR (H/M/L)	dB-A		47/44/40			-		/	/
		Power Level dB		64/59/54			-			
	NOISE OUTDOOR (H/L)	dB-A		-			55/-		/	/
		Power Level dB		-			71/-			
EXTRA LOW TEMP	Total CAPACITY(kW)/INPUT POWER(W)/COP				-					
MAX CURRENT(A)/MAX INPUT POWER(W)			0.59×2/57×2	0.58×2/57×2	0.52×2/57×2	30.0/6450k	30.0/6.650k	30.0/6.850k	/	
STARTING CURRENT(A)/COMP OUTPUT(W)			-	-	-	21.9/3.0k	21.2/3.0k	20.5/3.0k	/	
NETWORK IMPEDANCE (ΩMAX.)				-			-			
FM OUTPUT (W)				47×2			90×2		/	
MOISTURE REMOVAL VOLUME		L/h(Pt/h)	9.0 (4.5×2)		(18.9)		-			
External static pressure		Pa		-						
I/D AIR FLOW	COOL	m³/min (ft³/min)		[18/14.5/11.5 (636/512/406)]×2						
	HEAT	m³/min (ft³/min)		[18/14.5/11.5 (636/512/406)]×2						
O/D AIR FLOW	COOL	m³/min (ft³/min)				135		(4767)		
	HEAT	m³/min (ft³/min)				120		(4238)		
REFRIGERANT TYPE, AMOUNT g(oz)						R410A	3.40k	(119.9)	/	
PROD IM	HEIGHT : H mm(inch)			300 (11-1/32)			1416 (55-3/4)		/	
	WIDTH : W mm(inch)			1065 (41-23/64)			940 (37-1/32)		/	
	DEPTH : D mm(inch)			230 (9-1/32)			340 (13-13/32)		/	
PAC D IM	HEIGHT : H mm			310			1556		/	
	WIDTH : W mm			1140			1055		/	
	DEPTH : D mm			380			485		/	
MASS	(NET) kg(lb)			14.5 (32)			98 (216)		/	
	(GROSS) kg(lb)			18 (40)			108 (238)		/	
LAYERS LIMIT (actually)				15 (16)			1 (2)			
Operation Condition		Cool O.D(DBT)		18°C ~ 32°C			-15°C ~ 46°C			
		Heat O.D(DBT)		16°C ~ 30°C			-20°C ~ 24°C			
PIPING	PIPE DIAMETER mm (inch)		(Liquid)ø9.52(3/8) (Gas)ø15.88(5/8)			(Liquid)ø9.52(3/8) (Gas)ø15.88(5/8)				
	CONNECT METHOD, STD LENGTH m (ft)		flared type, 5.0(16.4)			flared type, 5.0(16.4)				
	PIPE LENGTH RANGE m (ft)			5 ~ 75 (16.4 ~ 246.1)					~	~
	I/D&O/D HEIGHT DIFFERENCE m (ft)		15 (OD located lower) / 30 (OD located higher) (49.2/98.4)							
	ADD GAS AMOUNT g/m (oz/ft)			50 (0.538)						
	PIPE LENGTH FOR ADDITIONAL GAS m (ft)			30 (98.4)						

*1: In case it is necessary to indicate the air □ow volume in (l/s), the value in (m^3/min.) shall be multiplied by 16.7 and rounded down the decimal point.
*2: If the EUROVENT Certi□ed models can be operated under the □extra-low□temperature condition, -7□C dry bulb and -8□C wet-bulb temperatures with rated voltage 230 V shall be used.
*3: Network Impedance shall be applicable for EUROPE and CHINA models.
*4: The annual consumption is calculated by multiplying the input power at 230 V (400 V) by an average of 500 hours per year in cooling mode.
*5: EER and COP classification is at 230 V (400 V) only in accordance with EU directive 2002/31/EC.
*6: SEER and SCOP classification is at 230V(400V) only in accordance with EN-14825. For heating, SCOP indicates the value of only Average heating season, Other fiche data indicates in an attached sheet.

Single -Type

1-1. Unit Speci□cations

PE1

3. Wall Mounted Type S-100PK1E5A / U-100PE1E5A

INDOOR		MODEL	S-100PK1E5A							
PANEL		MODEL	-			-				
OUTDOOR		MODEL				U-100PE1E5A				
Branch pipe		MODEL	-							
PERFORMANCE TEST CONDITION			ISO5151 / EN14511 / EN14825 / EN12102							
POWER SUPPLY		ø, Hz	1ø 50Hz			1ø 50Hz				
		V	220	230	240	220	230	240	Min	Max
COOLING	CAPACITY	kW	9.5	9.5	9.5				3.3	10.5
		BTU/h	32400	32400	32400				11300	35800
	CURRENT	A	0.61	0.59	0.55	13.4	12.9	12.4	-	-
	INPUT POWER	W	65	65	65	2.855k	2.855k	2.855k	-	-
		TOTAL W		-		2.920k	2.920k	2.920k	840	3.400k
	ANNUAL CONSUMPTION	TOTAL kWh ※4		-		-	1460	-	-	-
	EER/EER CLASS	TOTAL(W/W) ※5("A"~"G")	-	-	-	3.25	3.25 / A	3.25	3.93	3.09
	Erp ※6 Pdsign	kW	-	-	-	-	9.5	-		
	Erp ※6 SEER	(W/W)	-	-	-	-	6.2	-		
	Erp ※6 Annual consumption	kWh	-	-	-	-	536	-		
	Erp ※6 Class		-	-	-	-	A++	-		
	POWER FACTOR	%	-	-	-	97	96	96	-	-
	NOISE INDOOR (H/M/L)	dB-A		49/45/41						
		Power Level dB		65/60/55						
	NOISE OUTDOOR (H/L)	dB-A					52/-			
		Power Level dB					69/-			
HEATING	CAPACITY	kW	9.5	9.5	9.5				4.1	11.5
		BTU/h	32400	32400	32400				14000	39200
	CURRENT	A	0.62	0.60	0.56	11.3	10.9	10.6	-	-
	INPUT POWER	W	65	65	65	2.405k	2.405k	2.405k	-	-
		TOTAL W		-		2.470k	2.470k	2.470k	900	3.350k
	COP/COP CLASS	TOTAL(W/W) ※5("A"~"G")	-	-	-	3.85	3.85 / A	3.85	4.56	3.43
	Erp ※6 Pdsign	kW	-	-	-	-	9.5	-		
	Erp ※6 Tbivalen	°C	-	-	-	-	-10	-		
	Erp ※6 SCOP	(W/W)	-	-	-	-	3.8	-		
	Erp ※6 Annual consumption	kWh	-	-	-	-	3500	-		
	Erp ※6 Class		-	-	-	-	A	-		
	POWER FACTOR	%	-	-	-	97	96	95	-	-
	NOISE INDOOR (H/M/L)	dB-A		49/45/41			-		/	/
		Power Level dB		65/60/55			-			
	NOISE OUTDOOR (H/L)	dB-A		-			52/-		/	/
		Power Level dB		-			69/-			
EXTRA LOW TEMP	Total CAPACITY(kW)/INPUT POWER(W)/COP		-							
MAX CURRENT(A)/MAX INPUT POWER(W)			0.62/65	0.60/65	0.56/65	25.0/5.340k	25.0/5.520k	25.0/5.700k	/	
STARTING CURRENT(A)/COMP OUTPUT(W)			-	-	-	13.4/3.0k	12.9/3.0k	12.4/3.0k	/	
NETWORK IMPEDANCE (ΩMAX.)				-			-			
FM OUTPUT (W)				47			90×2		/	
MOISTURE REMOVAL VOLUME		L/h(Pt/h)	5.7		(12.0)		-			
External static pressure		Pa		-						
I/D AIR FLOW	COOL	m^3/min (ft^3/min)		19/16.5/13 (671/583/459)						
	HEAT	m^3/min (ft^3/min)		19/16.5/13 (671/583/459)						
O/D AIR FLOW	COOL	m^3/min (ft^3/min)				110		(3885)		
	HEAT	m^3/min (ft^3/min)				95		(3355)		
REFRIGERANT TYPE, AMOUNT g(oz)						R410A	3.40k	(119.9)	/	
PROD	HEIGHT : H mm(inch)			300 (11-1/32)			1416 (55-3/4)		/	
	WIDTH : W mm(inch)			1065 (41-23/64)			940 (37-1/32)		/	
	DEPTH : D mm(inch)			230 (9-1/32)			340 (13-13/32)		/	
PACK	HEIGHT : H mm			310			1556		/	
	WIDTH : W mm			1140			1055		/	
	DEPTH : D mm			380			485		/	
MASS	(NET) kg(lb)			14.5 (32)			98 (216)		/	
	(GROSS) kg(lb)			18 (40)			108 (238)		/	
LAYERS LIMIT (actually)				15 (16)			1 (2)			
Operation Condition		Cool O.D(DBT)		18°C ~ 32°C			-15°C ~ 46°C			
		Heat O.D(DBT)		16°C ~ 30°C			-20°C ~ 24°C			
PIPING	PIPE DIAMETER mm (inch)		(Liquid)ø9.52(3/8) (Gas)ø15.88(5/8)			(Liquid)ø9.52(3/8) (Gas)ø15.88(5/8)				
	CONNECT METHOD, STD LENGTH m (ft)		flared type, 5.0(16.4)			flared type, 5.0(16.4)				
	PIPE LENGTH RANGE m (ft)		5 ~ 75 (16.4 ~ 246.1)						~	~
	I/D&O/D HEIGHT DIFFERENCE m (ft)		15 (OD located lower) / 30 (OD located higher) (49.2/98.4)							
	ADD GAS AMOUNT g/m (oz/ft)		50 (0.538)							
	PIPE LENGTH FOR ADDITIONAL GAS m (ft)		30 (98.4)							

*1: In case it is necessary to indicate the air □ow volume in (l/s), the value in (m^3/min.) shall be multiplied by 16.7 and rounded down the decimal point.
*2: If the EUROVENT Certi□ed models can be operated under the □extra-low□temperature condition, -7□C dry bulb and -8□C wet-bulb temperatures with rated voltage 230 V shall be used.
*3: Network Impedance shall be applicable for EUROPE and CHINA models.
*4: The annual consumption is calculated by multiplying the input power at 230 V (400 V) by an average of 500 hours per year in cooling mode.
*5: EER and COP classification is at 230 V (400 V) only in accordance with EU directive 2002/31/EC.
*6: SEER and SCOP classification is at 230V(400V) only in accordance with EN-14825. For heating, SCOP indicates the value of only Average heating season, Other fiche data indicates in an attached sheet.

Simultaneous (Twin) -Type

1-1. Unit Speci□cations

PE1

3. Wall Mounted Type S-36PK1E5A×2 / U-71PE1E8A

INDOOR		MODEL	S-36PK1E5A×2							
PANEL		MODEL	-				-			
OUTDOOR		MODEL				U-71PE1E8A				
Branch pipe		MODEL	CZ-P155BK1							
PERFORMANCE TEST CONDITION			ISO5151 / EN14511 / EN14825 / EN12102							
POWER SUPPLY		ø, Hz	1ø 50Hz			3ø 50Hz				
		V	220	230	240	380	400	415	Min	Max
COOLING	CAPACITY	kW	7.1	7.1	7.1				3.2	8.0
		BTU/h	24200	24200	24200				10900	27300
	CURRENT	A	0.20×2	0.19×2	0.19×2	3.30	3.20	3.10	-	-
	INPUT POWER	W	16×2	17×2	17×2	2.055k	2.055k	2.055k	-	-
		TOTAL W		-		2.090k	2.090k	3.070k	560	2.650k
	ANNUAL CONSUMPTION	TOTAL kWh ※4		-		-	1045	-	-	-
	EER/EER CLASS	TOTAL(W/W)※5("A"~"G")	-	-	-	3.40	3.40 / A	3.40	5.71	3.02
	Erp ※6 Pdsign	kW	-	-	-	-	7.1	-		
	Erp ※6 SEER	(W/W)	-	-	-	-	6.1	-		
	Erp ※6 Annual consumption	kWh	-	-	-	-	407	-		
	Erp ※6 Class		-	-	-	-	A++	-		
	POWER FACTOR	%	-	-	-	95	93	92	-	-
	NOISE INDOOR (H/M/L)	dB-A		35/31/27						
		Power Level dB		52/46/41						
	NOISE OUTDOOR (H/L)	dB-A					48/-			
		Power Level dB					65/-			
HEATING	CAPACITY	kW	8.0	8.0	8.0				2.8	9.0
		BTU/h	27300	27300	27300				9600	30700
	CURRENT	A	0.20×2	0.19×2	0.19×2	3.35	3.25	3.15	-	-
	INPUT POWER	W	16×2	17×2	17×2	2.095k	2.095k	2.095k	-	-
		TOTAL W		-		2.130k	2.130k	2.130k	500	2.900k
	COP/COP CLASS	TOTAL(W/W)※5("A"~"G")	-	-	-	3.76	3.76 / A	3.76	5.60	3.10
	Erp ※6 Pdsign	kW	-	-	-	-	7.1	-		
	Erp ※6 Tbivalen	°C	-	-	-	-	-8	-		
	Erp ※6 SCOP	(W/W)	-	-	-	-	3.8	-		
	Erp ※6 Annual consumption	kWh	-	-	-	-	2616	-		
	Erp ※6 Class		-	-	-	-	A	-		
	POWER FACTOR	%	-	-	-	95	93	93	-	-
	NOISE INDOOR (H/M/L)	dB-A		35/31/27			-		/	/
		Power Level dB		52/46/41			-			
	NOISE OUTDOOR (H/L)	dB-A		-			50/-		/	/
		Power Level dB		-			67/-			
EXTRA LOW TEMP	Total CAPACITY(kW)/INPUT POWER(W)/COP					-				
MAX CURRENT(A)/MAX INPUT POWER(W)			0.20×2/16×2	0.19×2/17×2	0.19×2/17×2	7.0/4.150k	7.0/4.360k	7.0/4.530k	/	
STARTING CURRENT(A)/COMP OUTPUT(W)			-	-	-	3.35/2.0k	3.25/2.0k	3.15/2.0k	/	
NETWORK IMPEDANCE (ΩMAX.)				-			-			
FM OUTPUT (W)				47×2			90		/	
MOISTURE REMOVAL VOLUME		L/h(Pt/h)	4.2 (2.1×2)		(8.8)		-			
External static pressure		Pa		-						
I/D AIR FLOW	COOL	m^3/min (ft^3/min)		[11/9.5/7.5 (388/335/265)]×2						
	HEAT	m^3/min (ft^3/min)		[11/9.5/7.5 (388/335/265)]×2						
O/D AIR FLOW	COOL	m^3/min (ft^3/min)				60		(2119)		
	HEAT	m^3/min (ft^3/min)				60		(2119)		
REFRIGERANT TYPE, AMOUNT g(oz)						R410A	2.35k	(82.9)	/	
PROD IM	HEIGHT : H mm(inch)			300 (11-1/32)			996 (39-7/32)		/	
	WIDTH : W mm(inch)			1065 (41-23/64)			940 (37-1/32)		/	
	DEPTH : D mm(inch)			230 (9-1/32)			340 (13-13/32)		/	
PAC DIM	HEIGHT : H mm			310			1136		/	
	WIDTH : W mm			1140			1055		/	
	DEPTH : D mm			380			485		/	
MASS	(NET) kg(lb)			13 (29)			71 (157)		/	
	(GROSS) kg(lb)			17 (37)			79 (174)		/	
LAYERS LIMIT (actually)				15 (16)			2 (3)			
Operation Condition		Cool O.D(DBT)		18°C ~ 32°C			-15°C ~ 46°C			
		Heat O.D(DBT)		16°C ~ 30°C			-20°C ~ 24°C			
PIPING	PIPE DIAMETER mm (inch)		(Liquid)ø6.35(1/4) (Gas)ø12.7(1/2)			(Liquid)ø9.52(3/8) (Gas)ø15.88(5/8)				
	CONNECT METHOD, STD LENGTH m (ft)		flared type, 5.0(16.4)			flared type, 5.0(16.4)				
	PIPE LENGTH RANGE m (ft)			5 ~ 50 (16.4 ~ 164.0)					~	~
	I/D&O/D HEIGHT DIFFERENCE m (ft)		15 (OD located lower) / 30 (OD located higher) (49.2/98.4)							
	ADD GAS AMOUNT g/m (oz/ft)			50 (0.538)						
	PIPE LENGTH FOR ADDITIONAL GAS m (ft)			30 (98.4)						

*1: In case it is necessary to indicate the air □ow volume in (l/s), the value in (m^3/min.) shall be multiplied by 16.7 and rounded down the decimal point.
*2: If the EUROVENT Certi□ed models can be operated under the □extra-low□temperature condition, -7□C dry bulb and -8□C wet-bulb temperatures with rated voltage 230 V shall be used.
*3: Network Impedance shall be applicable for EUROPE and CHINA models.
*4: The annual consumption is calculated by multiplying the input power at 230 V (400 V) by an average of 500 hours per year in cooling mode.
*5: EER and COP classification is at 230 V (400 V) only in accordance with EU directive 2002/31/EC.
*6: SEER and SCOP classification is at 230V(400V) only in accordance with EN-14825. For heating, SCOP indicates the value of only Average heating season, Other fiche data indicates in an attached sheet.

Simultaneous (Triple) -Type

1-1. Unit Specifications

PE1

3. Wall Mounted Type S-36PK1E5A×3 / U-100PE1E8A

INDOOR		MODEL	S-36PK1E5A×3							
PANEL		MODEL	-			-				
OUTDOOR		MODEL				U-100PE1E8A				
Branch pipe		MODEL	CZ-P3HPC2							
PERFORMANCE TEST CONDITION			ISO5151 / EN14511 / EN14825 / EN12102							
POWER SUPPLY		ø, Hz	1ø 50Hz			3ø 50Hz				
		V	220	230	240	380	400	415	Min	Max
COOLING	CAPACITY	kW	10.0	10.0	10.0				3.3	12.5
		BTU/h	34100	34100	34100				11300	42700
	CURRENT	A	0.20×3	0.19×3	0.19×3	3.98	3.78	3.64	-	-
	INPUT POWER	W	16×3	17×3	17×3	2.525k	2.525k	2.520k	-	-
		TOTAL W		-		2.575k	2.580k	2.575k	840	3.700k
	ANNUAL CONSUMPTION	TOTAL kWh ※4		-		-	1290	-	-	-
	EER/EER CLASS	TOTAL(W/W)※5("A"~"G")	-	-	-	3.88	3.88 / A	3.88	3.93	3.38
	Erp ※6 Pdsign	kW	-	-	-	-	10.0	-		
	Erp ※6 SEER	(W/W)	-	-	-	-	6.1	-		
	Erp ※6 Annual consumption	kWh	-	-	-	-	574	-		
	Erp ※6 Class		-	-	-	-	A++	-		
	POWER FACTOR	%	-	-	-	96	96	96	-	-
	NOISE INDOOR (H/M/L)	dB-A		35/31/27						
		Power Level dB		52/46/41						
	NOISE OUTDOOR (H/L)	dB-A					52/-			
		Power Level dB					69/-			
HEATING	CAPACITY	kW	11.2	11.2	11.2				4.1	14.0
		BTU/h	38200	38200	38200				14000	47800
	CURRENT	A	0.20×3	0.19×3	0.19×3	4.35	4.14	3.98	-	-
	INPUT POWER	W	16×3	17×3	17×3	2.705k	2.705k	2.700k	-	-
		TOTAL W		-		2.755k	2.760k	2.755k	900	4.400k
	COP/COP CLASS	TOTAL(W/W)※5("A"~"G")	-	-	-	4.07	4.06 / A	4.07	4.56	3.18
	Erp ※6 Pdsign	kW	-	-	-	-	10.0	-		
	Erp ※6 Tbivalen	°C	-	-	-	-	-10	-		
	Erp ※6 SCOP	(W/W)	-	-	-	-	4.0	-		
	Erp ※6 Annual consumption	kWh	-	-	-	-	3500	-		
	Erp ※6 Class		-	-	-	-	A+	-		
	POWER FACTOR	%	-	-	-	94	94	94	-	-
	NOISE INDOOR (H/M/L)	dB-A		35/31/27			-		/	/
		Power Level dB		52/46/41			-			
	NOISE OUTDOOR (H/L)	dB-A		-			52/-		/	/
		Power Level dB		-			69/-			
EXTRA LOW TEMP	Total CAPACITY(kW)/INPUT POWER(W)/COP					-				
MAX CURRENT(A)/MAX INPUT POWER(W)			0.20×3/16×3	0.19×3/17×3	0.19×3/17×3	9.0/5.550k	9.0/5.850k	9.0/6.100k	/	
STARTING CURRENT(A)/COMP OUTPUT(W)			-	-	-	4.35/3.0k	4.14/3.0k	3.98/3.0k	/	
NETWORK IMPEDANCE (ΩMAX.)				-			-			
FM OUTPUT (W)				47×3			90×2		/	
MOISTURE REMOVAL VOLUME		L/h(Pt/h)	6.0 (2.0×3)		(12.6)		-			
External static pressure		Pa		-						
I/D AIR FLOW	COOL	m^3/min (ft^3/min)		[11/9.5/7.5 (388/335/265)]×3						
	HEAT	m^3/min (ft^3/min)		[11/9.5/7.5 (388/335/265)]×3						
O/D AIR FLOW	COOL	m^3/min (ft^3/min)				110		(3885)		
	HEAT	m^3/min (ft^3/min)				95		(3355)		
REFRIGERANT TYPE, AMOUNT g(oz)						R410A	3.40k	(119.9)	/	
PROD DIM	HEIGHT : H mm(inch)			300 (11-1/32)			1416 (55-3/4)		/	
	WIDTH : W mm(inch)			1065 (41-23/64)			940 (37-1/32)		/	
	DEPTH : D mm(inch)			230 (9-1/32)			340 (13-13/32)		/	
PACK DIM	HEIGHT : H mm			310			1556		/	
	WIDTH : W mm			1140			1055		/	
	DEPTH : D mm			380			485		/	
MASS	(NET) kg(lb)			13 (29)			98 (216)		/	
	(GROSS) kg(lb)			17 (37)			108 (238)		/	
LAYERS LIMIT (actually)				15 (16)			1 (2)			
Operation Condition		Cool O.D(DBT)		18°C ~ 32°C			-15°C ~ 46°C			
		Heat O.D(DBT)		16°C ~ 30°C			-20°C ~ 24°C			
PIPING	PIPE DIAMETER mm (inch)		(Liquid)ø6.35(1/4) (Gas)ø12.7(1/2)			(Liquid)ø9.52(3/8) (Gas)ø15.88(5/8)				
	CONNECT METHOD, STD LENGTH m (ft)		flared type, 5.0(16.4)			flared type, 5.0(16.4)				
	PIPE LENGTH RANGE m (ft)			5 ~ 75 (16.4 ~ 246.1)					~	~
	I/D&O/D HEIGHT DIFFERENCE m (ft)		15 (OD located lower) / 30 (OD located higher) (49.2/98.4)							
	ADD GAS AMOUNT g/m (oz/ft)			50 (0.538)						
	PIPE LENGTH FOR ADDITIONAL GAS m (ft)			20 (65.6)						

*1: In case it is necessary to indicate the air flow volume in (l/s), the value in (m^3/min.) shall be multiplied by 16.7 and rounded down the decimal point.
*2: If the EUROVENT Certified models can be operated under the extra-low temperature condition, -7°C dry bulb and -8°C wet-bulb temperatures with rated voltage 230 V shall be used.
*3: Network Impedance shall be applicable for EUROPE and CHINA models.
*4: The annual consumption is calculated by multiplying the input power at 230 V (400 V) by an average of 500 hours per year in cooling mode.
*5: EER and COP classification is at 230 V (400 V) only in accordance with EU directive 2002/31/EC.
*6: SEER and SCOP classification is at 230V(400V) only in accordance with EN-14825. For heating, SCOP indicates the value of only Average heating season, Other fiche data indicates in an attached sheet.

Simultaneous (Double-Twin) -Type

1-1. Unit Speci□cations

PE1

3. Wall Mounted Type S-36PK1E5A×4 / U-125PE1E8A

INDOOR		MODEL	S-36PK1E5A×4							
PANEL		MODEL	-				-			
OUTDOOR		MODEL				U-125PE1E8A				
Branch pipe		MODEL	CZ-P155BK1×3							
PERFORMANCE TEST CONDITION			ISO5151 / EN14511 / EN12102							
POWER SUPPLY		ø, Hz	1ø 50Hz			3ø 50Hz				
		V	220	230	240	380	400	415	Min	Max
COOLING	CAPACITY	kW	12.5	12.5	12.5				3.3	14.0
		BTU/h	42700	42700	42700				11300	47800
	CURRENT	A	0.20×4	0.19×4	0.19×4	5.78	5.56	5.40	-	-
	INPUT POWER	W	16×4	17×4	17×4	3.705k	3.705k	3.705k	-	-
		TOTAL W		-		3.770k	3.775k	3.775k	840	4.600k
	ANNUAL CONSUMPTION	TOTAL kWh ※4		-		-	1887.5	-	-	-
	EER/EER CLASS	TOTAL(W/W)※5("A"~"G")	-	-	-	3.32	3.31 / A	3.31	3.93	3.04
	Erp ※6 Pdsign	kW	-	-	-	-	-	-		
	Erp ※6 SEER	(W/W)	-	-	-	-	-	-		
	Erp ※6 Annual consumption	kWh	-	-	-	-	-	-		
	Erp ※6 Class		-	-	-	-	-	-		
	POWER FACTOR	%	-	-	-	97	96	95	-	-
	NOISE INDOOR (H/M/L)	dB-A		35/31/27						
		Power Level dB		52/46/41						
	NOISE OUTDOOR (H/L)	dB-A					53/-			
		Power Level dB					70/-			
HEATING	CAPACITY	kW	14.0	14.0	14.0				4.1	16.0
		BTU/h	47800	47800	47800				14000	54600
	CURRENT	A	0.20×4	0.19×4	0.19×4	5.78	5.55	5.40	-	-
	INPUT POWER	W	16×4	17×4	17×4	3.705k	3.705k	3.705k	-	-
		TOTAL W		-		3.770k	3.775k	3.775k	900	5.200k
	COP/COP CLASS	TOTAL(W/W)※5("A"~"G")	-	-	-	3.71	3.71 / A	3.71	4.56	3.08
	Erp ※6 Pdsign	kW	-	-	-	-	-	-		
	Erp ※6 Tbivalen	°C	-	-	-	-	-	-		
	Erp ※6 SCOP	(W/W)	-	-	-	-	-	-		
	Erp ※6 Annual consumption	kWh	-	-	-	-	-	-		
	Erp ※6 Class		-	-	-	-	-	-		
	POWER FACTOR	%	-	-	-	97	96	95	-	-
	NOISE INDOOR (H/M/L)	dB-A		35/31/27			-		/	/
		Power Level dB		52/46/41			-			
	NOISE OUTDOOR (H/L)	dB-A		-			53/-		/	/
		Power Level dB		-			70/-			
EXTRA LOW TEMP	Total CAPACITY(kW)/INPUT POWER(W)/COP					-				
MAX CURRENT(A)/MAX INPUT POWER(W)			0.20×4/16×4	0.19×4/17×4	0.19×4/17×4	10.0/6.200k	10.0/6.500k	10.0/6.750k	/	
STARTING CURRENT(A)/COMP OUTPUT(W)			-	-	-	5.78/3.0k	5.55/3.0k	5.40/3.0k	/	
NETWORK IMPEDANCE (ΩMAX.)				-			-			
FM OUTPUT (W)				47×4			90×2		/	
MOISTURE REMOVAL VOLUME		L/h(Pt/h)	7.9 (1.98×4)		(16.6)		-			
External static pressure		Pa		-						
I/D AIR FLOW	COOL	m^3/min (ft^3/min)		[11/9.5/7.5 (388/335/265)]×4						
	HEAT	m^3/min (ft^3/min)		[11/9.5/7.5 (388/335/265)]×4						
O/D AIR FLOW	COOL	m^3/min (ft^3/min)				130		(4591)		
	HEAT	m^3/min (ft^3/min)				110		(3885)		
REFRIGERANT TYPE, AMOUNT g(oz)						R410A	3.40k	(119.9)	/	
PROD	HEIGHT : H mm(inch)			300 (11-1/32)			1416 (55-3/4)		/	
	WIDTH : W mm(inch)			1065 (41-23/64)			940 (37-1/32)		/	
	DEPTH : D mm(inch)			230 (9-1/32)			340 (13-13/32)		/	
PACK	HEIGHT : H mm			310			1556		/	
	WIDTH : W mm			1140			1055		/	
	DEPTH : D mm			380			485		/	
MASS	(NET) kg(lb)			13 (29)			98 (216)		/	
	(GROSS) kg(lb)			17 (37)			108 (238)		/	
LAYERS LIMIT (actually)				15 (16)			1 (2)			
Operation Condition		Cool O.D(DBT)		18°C ~ 32°C			-15°C ~ 46°C			
		Heat O.D(DBT)		16°C ~ 30°C			-20°C ~ 24°C			
PIPING	PIPE DIAMETER mm (inch)		(Liquid)ø6.35(1/4) (Gas)ø12.7(1/2)			(Liquid)ø9.52(3/8) (Gas)ø15.88(5/8)				
	CONNECT METHOD, STD LENGTH m (ft)		flared type, 5.0(16.4)			flared type, 5.0(16.4)				
	PIPE LENGTH RANGE m (ft)			5 ~ 75 (16.4 ~ 246.1)					~	~
	I/D&O/D HEIGHT DIFFERENCE m (ft)		15 (OD located lower) / 30 (OD located higher) (49.2/98.4)							
	ADD GAS AMOUNT g/m (oz/ft)			50 (0.538)						
	PIPE LENGTH FOR ADDITIONAL GAS m (ft)			20 (65.6)						

*1: In case it is necessary to indicate the air □ow volume in (l/s), the value in (m^3/min.) shall be multiplied by 16.7 and rounded down the decimal point.
*2: If the EUROVENT Certi□ed models can be operated under the □extra-low□temperature condition, -7□C dry bulb and -8□C wet-bulb temperatures with rated voltage 230 V shall be used.
*3: Network Impedance shall be applicable for EUROPE and CHINA models.
*4: The annual consumption is calculated by multiplying the input power at 230 V (400 V) by an average of 500 hours per year in cooling mode.
*5: EER and COP classification is at 230 V (400 V) only in accordance with EU directive 2002/31/EC.
*6: SEER and SCOP classification is at 230V(400V) only in accordance with EN-14825. For heating, SCOP indicates the value of only Average heating season, Other fiche data indicates in an attached sheet.

Simultaneous (Triple) -Type

1-1. Unit Speci□cations

PE1

3. Wall Mounted Type S-45PK1E5A×3 / U-125PE1E8A

INDOOR		MODEL	S-45PK1E5A×3							
PANEL		MODEL	-				-			
OUTDOOR		MODEL				U-125PE1E8A				
Branch pipe		MODEL	CZ-P3HPC2							
PERFORMANCE TEST CONDITION			ISO5151 / EN14511 / EN12102							
POWER SUPPLY		ø, Hz	1ø 50Hz			3ø 50Hz				
		V	220	230	240	380	400	415	Min	Max
COOLING	CAPACITY	kW	12.5	12.5	12.5				3.3	14.0
		BTU/h	42700	42700	42700				11300	47800
	CURRENT	A	0.22×3	0.21×3	0.20×3	5.78	5.56	5.40	-	-
	INPUT POWER	W	20×3	20×3	20×3	3.705k	3.705k	3.705k	-	-
		TOTAL W		-		3.765k	3.765k	3.765k	840	4.600k
	ANNUAL CONSUMPTION	TOTAL kWh ※4		-		-	1882.5	-	-	-
	EER/EER CLASS	TOTAL(W/W)※5("A"~"G")	-	-	-	3.32	3.32 / A	3.32	3.93	3.04
	Erp ※6 Pdsign	kW	-	-	-	-	-	-		
	Erp ※6 SEER	(W/W)	-	-	-	-	-	-		
	Erp ※6 Annual consumption	kWh	-	-	-	-	-	-		
	Erp ※6 Class		-	-	-	-	-	-		
	POWER FACTOR	%	-	-	-	97	96	95	-	-
	NOISE INDOOR (H/M/L)	dB-A		38/34/30						
		Power Level dB		55/49/44						
	NOISE OUTDOOR (H/L)	dB-A					53/-			
		Power Level dB					70/-			
HEATING	CAPACITY	kW	14.0	14.0	14.0				4.1	16.0
		BTU/h	47800	47800	47800				14000	54600
	CURRENT	A	0.22×3	0.21×3	0.20×3	5.78	5.55	5.40	-	-
	INPUT POWER	W	20×3	20×3	20×3	3.705k	3.705k	3.705k	-	-
		TOTAL W		-		3.765k	3.765k	3.765k	900	5.200k
	COP/COP CLASS	TOTAL(W/W)※5("A"~"G")	-	-	-	3.72	3.72 / A	3.72	4.56	3.08
	Erp ※6 Pdsign	kW	-	-	-	-	-	-		
	Erp ※6 Tbivalen	°C	-	-	-	-	-	-		
	Erp ※6 SCOP	(W/W)	-	-	-	-	-	-		
	Erp ※6 Annual consumption	kWh	-	-	-	-	-	-		
	Erp ※6 Class		-	-	-	-	-	-		
	POWER FACTOR	%	-	-	-	97	96	95	-	-
	NOISE INDOOR (H/M/L)	dB-A		38/34/30			-		/	/
		Power Level dB		55/49/44			-			
	NOISE OUTDOOR (H/L)	dB-A		-			53/-		/	/
		Power Level dB		-			70/-			
EXTRA LOW TEMP	Total CAPACITY(kW)/INPUT POWER(W)/COP					-				
MAX CURRENT(A)/MAX INPUT POWER(W)			0.22×3/20×3	0.21×3/20×3	0.20×3/20×3	10.0/6.200k	10.0/6.500k	10.0/6.750k	/	
STARTING CURRENT(A)/COMP OUTPUT(W)			-	-	-	5.78/3.0k	5.55/3.0k	5.40/3.0k	/	
NETWORK IMPEDANCE (ΩMAX.)				-			-			
FM OUTPUT (W)				47×3			90×2		/	
MOISTURE REMOVAL VOLUME		L/h(Pt/h)	7.9 (2.63×3)		(16.6)		-			
External static pressure		Pa		-						
I/D AIR FLOW	COOL	m^3/min (ft^3/min)		[12/10.5/8.5 (424/371/300)]×3						
	HEAT	m^3/min (ft^3/min)		[12/10.5/8.5 (424/371/300)]×3						
O/D AIR FLOW	COOL	m^3/min (ft^3/min)				130		(4591)		
	HEAT	m^3/min (ft^3/min)				110		(3885)		
REFRIGERANT TYPE, AMOUNT g(oz)						R410A	3.40k	(119.9)	/	
PROD	HEIGHT : H mm(inch)			300 (11-1/32)			1416 (55-3/4)		/	
	WIDTH : W mm(inch)			1065 (41-23/64)			940 (37-1/32)		/	
	DEPTH : D mm(inch)			230 (9-1/32)			340 (13-13/32)		/	
PACK	HEIGHT : H mm			310			1556		/	
	WIDTH : W mm			1140			1055		/	
	DEPTH : D mm			380			485		/	
MASS	(NET) kg(lb)			13 (29)			98 (216)		/	
	(GROSS) kg(lb)			17 (37)			108 (238)		/	
LAYERS LIMIT (actually)				15 (16)			1 (2)			
Operation Condition		Cool O.D(DBT)		18°C ~ 32°C			-15°C ~ 46°C			
		Heat O.D(DBT)		16°C ~ 30°C			-20°C ~ 24°C			
PIPING	PIPE DIAMETER mm (inch)		(Liquid)ø6.35(1/4) (Gas)ø12.7(1/2)			(Liquid)ø9.52(3/8) (Gas)ø15.88(5/8)				
	CONNECT METHOD, STD LENGTH m (ft)		flared type, 5.0(16.4)			flared type, 5.0(16.4)				
	PIPE LENGTH RANGE m (ft)			5 ~ 75 (16.4 ~ 246.1)					~	~
	I/D&O/D HEIGHT DIFFERENCE m (ft)		15 (OD located lower) / 30 (OD located higher) (49.2/98.4)							
	ADD GAS AMOUNT g/m (oz/ft)			50 (0.538)						
	PIPE LENGTH FOR ADDITIONAL GAS m (ft)			20 (65.6)						

*1: In case it is necessary to indicate the air □ow volume in (l/s), the value in (m^3/min.) shall be multiplied by 16.7 and rounded down the decimal point.
*2: If the EUROVENT Certi□ed models can be operated under the □extra-low□temperature condition, -7□C dry bulb and -8□C wet-bulb temperatures with rated voltage 230 V shall be used.
*3: Network Impedance shall be applicable for EUROPE and CHINA models.
*4: The annual consumption is calculated by multiplying the input power at 230 V (400 V) by an average of 500 hours per year in cooling mode.
*5: EER and COP classification is at 230 V (400 V) only in accordance with EU directive 2002/31/EC.
*6: SEER and SCOP classification is at 230V(400V) only in accordance with EN-14825. For heating, SCOP indicates the value of only Average heating season, Other fiche data indicates in an attached sheet.

Simultaneous (Twin) -Type

1-1. Unit Speci□cations

PE1

3. Wall Mounted Type S-50PK1E5A×2 / U-100PE1E8A

INDOOR		MODEL	S-50PK1E5A×2							
PANEL		MODEL	-				-			
OUTDOOR		MODEL				U-100PE1E8A				
Branch pipe		MODEL	CZ-P155BK1							
PERFORMANCE TEST CONDITION			ISO5151 / EN14511 / EN14825 / EN12102							
POWER SUPPLY		ø, Hz	1ø 50Hz			3ø 50Hz				
		V	220	230	240	380	400	415	Min	Max
COOLING	CAPACITY	kW	10.0	10.0	10.0				3.3	12.5
		BTU/h	34100	34100	34100				11300	42700
	CURRENT	A	0.27×2	0.27×2	0.27×2	3.98	3.78	3.64	-	-
	INPUT POWER	W	26×2	27×2	28×2	2.525k	2.525k	2.520k	-	-
		TOTAL W		-		2.580k	2.580k	2.580k	840	3.700k
	ANNUAL CONSUMPTION	TOTAL kWh ※4		-		-	1290	-	-	-
	EER/EER CLASS	TOTAL(W/W)※5/("A"~"G")	-	-	-	3.88	3.88 / A	3.88	3.93	3.38
	Erp ※6 Pdsign	kW	-	-	-	-	10.0	-		
	Erp ※6 SEER	(W/W)	-	-	-	-	6.1	-		
	Erp ※6 Annual consumption	kWh	-	-	-	-	574	-		
	Erp ※6 Class		-	-	-	-	A++	-		
	POWER FACTOR	%	-	-	-	96	96	96	-	-
	NOISE INDOOR (H/M/L)	dB-A		40/36/32						
		Power Level dB		57/51/46						
	NOISE OUTDOOR (H/L)	dB-A					52/-			
		Power Level dB					69/-			
HEATING	CAPACITY	kW	11.2	11.2	11.2				4.1	14.0
		BTU/h	38200	38200	38200				14000	47800
	CURRENT	A	0.27×2	0.27×2	0.27×2	4.35	4.14	3.98	-	-
	INPUT POWER	W	26×2	27×2	28×2	2.705k	2.705k	2.700k	-	-
		TOTAL W		-		2.760k	2.760k	2.760k	900	4.400k
	COP/COP CLASS	TOTAL(W/W)※5/("A"~"G")	-	-	-	4.06	4.06 / A	4.06	4.56	3.18
	Erp ※6 Pdsign	kW	-	-	-	-	10.0	-		
	Erp ※6 Tbivalen	°C	-	-	-	-	-10	-		
	Erp ※6 SCOP	(W/W)	-	-	-	-	4.0	-		
	Erp ※6 Annual consumption	kWh	-	-	-	-	3500	-		
	Erp ※6 Class		-	-	-	-	A+	-		
	POWER FACTOR	%	-	-	-	94	94	94	-	-
	NOISE INDOOR (H/M/L)	dB-A		40/36/32			-		/	/
		Power Level dB		57/51/46			-			
	NOISE OUTDOOR (H/L)	dB-A		-			52/-		/	/
		Power Level dB		-			69/-			
EXTRA LOW TEMP	Total CAPACITY(kW)/INPUT POWER(W)/COP				-					
MAX CURRENT(A)/MAX INPUT POWER(W)			0.27×2/26×2	0.27×2/27×2	0.27×2/28×2	9.0/5.550k	9.0/5.850k	9.0/6.100k	/	
STARTING CURRENT(A)/COMP OUTPUT(W)			-	-	-	4.35/3.0k	4.14/3.0k	3.98/3.0k	/	
NETWORK IMPEDANCE (ΩMAX.)				-			-			
FM OUTPUT (W)				47×2			90×2		/	
MOISTURE REMOVAL VOLUME		L/h(Pt/h)	6.0 (3.0×2)		(12.6)		-			
External static pressure		Pa		-						
I/D AIR FLOW	COOL	m^3/min (ft^3/min)		[14/12/10.5 (494/424/371)]×2						
	HEAT	m^3/min (ft^3/min)		[14/12/10.5 (494/424/371)]×2						
O/D AIR FLOW	COOL	m^3/min (ft^3/min)					110 (3885)			
	HEAT	m^3/min (ft^3/min)					95 (3355)			
REFRIGERANT TYPE, AMOUNT g(oz)						R410A	3.40k	(119.9)	/	
PROD IM	HEIGHT : H mm(inch)			300 (11-1/32)			1416 (55-3/4)		/	
	WIDTH : W mm(inch)			1065 (41-23/64)			940 (37-1/32)		/	
	DEPTH : D mm(inch)			230 (9-1/32)			340 (13-13/32)		/	
PAC DIM	HEIGHT : H mm			310			1556		/	
	WIDTH : W mm			1140			1055		/	
	DEPTH : D mm			380			485		/	
MASS	(NET) kg(lb)			13 (29)			98 (216)		/	
	(GROSS) kg(lb)			17 (37)			108 (238)		/	
LAYERS LIMIT (actually)				15 (16)			1 (2)			
Operation Condition		Cool O.D(DBT)		18°C ~ 32°C			-15°C ~ 46°C			
		Heat O.D(DBT)		16°C ~ 30°C			-20°C ~ 24°C			
PIPING	PIPE DIAMETER mm (inch)		(Liquid)ø6.35(1/4) (Gas)ø12.7(1/2)			(Liquid)ø9.52(3/8) (Gas)ø15.88(5/8)				
	CONNECT METHOD, STD LENGTH m (ft)		flared type, 5.0(16.4)			flared type, 5.0(16.4)				
	PIPE LENGTH RANGE m (ft)		5 ~ 75 (16.4 ~ 246.1)						~	~
	I/D&O/D HEIGHT DIFFERENCE m (ft)		15 (OD located lower) / 30 (OD located higher) (49.2/98.4)							
	ADD GAS AMOUNT g/m (oz/ft)		50 (0.538)							
	PIPE LENGTH FOR ADDITIONAL GAS m (ft)		30 (98.4)							

*1: In case it is necessary to indicate the air □ow volume in (l/s), the value in (m^3/min.) shall be multiplied by 16.7 and rounded down the decimal point.
*2: If the EUROVENT Certi□ed models can be operated under the □extra-low□temperature condition, -7□C dry bulb and -8□C wet-bulb temperatures with rated voltage 230 V shall be used.
*3: Network Impedance shall be applicable for EUROPE and CHINA models.
*4: The annual consumption is calculated by multiplying the input power at 230 V (400 V) by an average of 500 hours per year in cooling mode.
*5: EER and COP classification is at 230 V (400 V) only in accordance with EU directive 2002/31/EC.
*6: SEER and SCOP classification is at 230V(400V) only in accordance with EN-14825. For heating, SCOP indicates the value of only Average heating season, Other fiche data indicates in an attached sheet.

Simultaneous (Triple) -Type

1-1. Unit Speci□cations

PE1

3. Wall Mounted Type S-50PK1E5A×3 / U-140PE1E8A

INDOOR		MODEL	S-50PK1E5A×3							
PANEL		MODEL	-			-				
OUTDOOR		MODEL				U-140PE1E8A				
Branch pipe		MODEL	CZ-P3HPC2							
PERFORMANCE TEST CONDITION			ISO5151 / EN14511 / EN12102							
POWER SUPPLY		ø, Hz	1ø 50Hz			3ø 50Hz				
		V	220	230	240	380	400	415	Min	Max
COOLING	CAPACITY	kW	14.0	14.0	14.0				3.3	15.5
		BTU/h	47800	47800	47800				11300	52900
	CURRENT	A	0.27×3	0.27×3	0.27×3	7.12	6.85	6.66	-	-
	INPUT POWER	W	26×3	27×3	28×3	4.565k	4.565k	4.565k	-	-
		TOTAL W		-		4.645k	4.650k	4.650k	840	6.000k
	ANNUAL CONSUMPTION	TOTAL kWh ※4		-		-	2325	-	-	-
	EER/EER CLASS	TOTAL(W/W)※5("A"~"G")	-	-	-	3.01	3.01 / C	3.01	3.93	2.58
	Erp ※6 Pdsign	kW	-	-	-	-	-	-		
	Erp ※6 SEER	(W/W)	-	-	-	-	-	-		
	Erp ※6 Annual consumption	kWh	-	-	-	-	-	-		
	Erp ※6 Class		-	-	-	-	-	-		
	POWER FACTOR	%	-	-	-	97	96	95	-	-
	NOISE INDOOR (H/M/L)	dB-A		40/36/32						
		Power Level dB		57/51/46						
	NOISE OUTDOOR (H/L)	dB-A					54/-			
		Power Level dB					71/-			
HEATING	CAPACITY	kW	16.0	16.0	16.0				4.1	18.0
		BTU/h	54600	54600	54600				14000	61400
	CURRENT	A	0.27×3	0.27×3	0.27×3	7.31	6.94	6.76	-	-
	INPUT POWER	W	26×3	27×3	28×3	4.685k	4.685k	4.685k	-	-
		TOTAL W		-		4.765k	4.770k	4.770k	900	5.900k
	COP/COP CLASS	TOTAL(W/W)※5("A"~"G")	-	-	-	3.36	3.35 / C	3.35	4.56	3.05
	Erp ※6 Pdsign	kW	-	-	-	-	-	-		
	Erp ※6 Tbivalen	°C	-	-	-	-	-	-		
	Erp ※6 SCOP	(W/W)	-	-	-	-	-	-		
	Erp ※6 Annual consumption	kWh	-	-	-	-	-	-		
	Erp ※6 Class		-	-	-	-	-	-		
	POWER FACTOR	%	-	-	-	97	97	96	-	-
	NOISE INDOOR (H/M/L)	dB-A		40/36/32			-		/	/
		Power Level dB		57/51/46			-			
	NOISE OUTDOOR (H/L)	dB-A		-			55/-		/	/
		Power Level dB		-			71/-			
EXTRA LOW TEMP	Total CAPACITY(kW)/INPUT POWER(W)/COP					-				
MAX CURRENT(A)/MAX INPUT POWER(W)			0.27×3/26×3	0.27×3/27×3	0.27×3/28×3	11.0/6.800k	11.0/7.150k	11.0/7.450k	/	
STARTING CURRENT(A)/COMP OUTPUT(W)			-	-	-	7.31/3.0k	6.94/3.0k	6.76/3.0k	/	
NETWORK IMPEDANCE (ΩMAX.)				-			-			
FM OUTPUT (W)				47×3			90×2		/	
MOISTURE REMOVAL VOLUME		L/h(Pt/h)	9.0 (3.0×3)		(18.9)		-			
External static pressure		Pa		-						
I/D AIR FLOW	COOL	m^3/min (ft^3/min)		[14/12/10.5 (494/424/371)]×3						
	HEAT	m^3/min (ft^3/min)		[14/12/10.5 (494/424/371)]×3						
O/D AIR FLOW	COOL	m^3/min (ft^3/min)				135		(4767)		
	HEAT	m^3/min (ft^3/min)				120		(4238)		
REFRIGERANT TYPE, AMOUNT g(oz)						R410A	3.40k	(119.9)	/	
PROD IM	HEIGHT : H mm(inch)			300 (11-1/32)			1416 (55-3/4)		/	
	WIDTH : W mm(inch)			1065 (41-23/64)			940 (37-1/32)		/	
	DEPTH : D mm(inch)			230 (9-1/32)			340 (13-13/32)		/	
PAC D IM	HEIGHT : H mm			310			1556		/	
	WIDTH : W mm			1140			1055		/	
	DEPTH : D mm			380			485		/	
MASS	(NET) kg(lb)			13 (29)			98 (216)		/	
	(GROSS) kg(lb)			17 (37)			108 (238)		/	
LAYERS LIMIT (actually)				15 (16)			1 (2)			
Operation Condition		Cool O.D(DBT)		18°C ~ 32°C			-15°C ~ 46°C			
		Heat O.D(DBT)		16°C ~ 30°C			-20°C ~ 24°C			
PIPING	PIPE DIAMETER mm (inch)		(Liquid)ø6.35(1/4) (Gas)ø12.7(1/2)			(Liquid)ø9.52(3/8) (Gas)ø15.88(5/8)				
	CONNECT METHOD, STD LENGTH m (ft)		flared type, 5.0(16.4)			flared type, 5.0(16.4)				
	PIPE LENGTH RANGE m (ft)			5 ~ 75 (16.4 ~ 246.1)					~	~
	I/D&O/D HEIGHT DIFFERENCE m (ft)		15 (OD located lower) / 30 (OD located higher) (49.2/98.4)							
	ADD GAS AMOUNT g/m (oz/ft)			50 (0.538)						
	PIPE LENGTH FOR ADDITIONAL GAS m (ft)			20 (65.6)						

*1: In case it is necessary to indicate the air □ow volume in (l/s), the value in (m^3/min.) shall be multiplied by 16.7 and rounded down the decimal point.
*2: If the EUROVENT Certi□ed models can be operated under the □extra-low□temperature condition, -7□C dry bulb and -8□C wet-bulb temperatures with rated voltage 230 V shall be used.
*3: Network Impedance shall be applicable for EUROPE and CHINA models.
*4: The annual consumption is calculated by multiplying the input power at 230 V (400 V) by an average of 500 hours per year in cooling mode.
*5: EER and COP classification is at 230 V (400 V) only in accordance with EU directive 2002/31/EC.
*6: SEER and SCOP classification is at 230V(400V) only in accordance with EN-14825. For heating, SCOP indicates the value of only Average heating season, Other fiche data indicates in an attached sheet.

Simultaneous (Twin) -Type

1-1. Unit Speci□cations

PE1

3. Wall Mounted Type S-60PK1E5A×2 / U-125PE1E8A

INDOOR		MODEL	S-60PK1E5A×2							
PANEL		MODEL	-				-			
OUTDOOR		MODEL				U-125PE1E8A				
Branch pipe		MODEL	CZ-P155BK1							
PERFORMANCE TEST CONDITION			ISO5151 / EN14511 / EN12102							
POWER SUPPLY		ø, Hz	1ø 50Hz			3ø 50Hz				
		V	220	230	240	380	400	415	Min	Max
COOLING	CAPACITY	kW	12.5	12.5	12.5				3.3	14.0
		BTU/h	42700	42700	42700				11300	47800
	CURRENT	A	0.59×2	0.58×2	0.52×2	5.78	5.56	5.40	-	-
	INPUT POWER	W	57×2	57×2	57×2	3.705k	3.705k	3.705k	-	-
		TOTAL W		-		3.820k	3.820k	3.820k	840	4.600k
	ANNUAL CONSUMPTION	TOTAL kWh ※4		-		-	1910	-	-	-
	EER/EER CLASS	TOTAL(W/W)※5("A"~"G")	-	-	-	3.27	3.27 / A	3.27	3.93	3.04
	Erp ※6 Pdsign	kW	-	-	-	-	-	-		
	Erp ※6 SEER	(W/W)	-	-	-	-	-	-		
	Erp ※6 Annual consumption	kWh	-	-	-	-	-	-		
	Erp ※6 Class		-	-	-	-	-	-		
	POWER FACTOR	%	-	-	-	97	96	95	-	-
	NOISE INDOOR (H/M/L)	dB-A		47/44/40						
		Power Level dB		64/59/54						
	NOISE OUTDOOR (H/L)	dB-A					53/-			
		Power Level dB					70/-			
HEATING	CAPACITY	kW	14.0	14.0	14.0				4.1	16.0
		BTU/h	47800	47800	47800				14000	54600
	CURRENT	A	0.59×2	0.58×2	0.52×2	5.78	5.55	5.40	-	-
	INPUT POWER	W	57×2	57×2	57×2	3.705k	3.705k	3.705k	-	-
		TOTAL W		-		3.820k	3.820k	3.820k	900	5.200k
	COP/COP CLASS	TOTAL(W/W)※5("A"~"G")	-	-	-	3.66	3.66 / A	3.66	4.56	3.08
	Erp ※6 Pdsign	kW	-	-	-	-	-	-		
	Erp ※6 Tbivalen	°C	-	-	-	-	-	-		
	Erp ※6 SCOP	(W/W)	-	-	-	-	-	-		
	Erp ※6 Annual consumption	kWh	-	-	-	-	-	-		
	Erp ※6 Class		-	-	-	-	-	-		
	POWER FACTOR	%	-	-	-	97	96	95	-	-
	NOISE INDOOR (H/M/L)	dB-A		47/44/40			-		/	/
		Power Level dB		64/59/54			-			
	NOISE OUTDOOR (H/L)	dB-A		-			53/-		/	/
		Power Level dB		-			70/-			
EXTRA LOW TEMP	Total CAPACITY(kW)/INPUT POWER(W)/COP				-					
MAX CURRENT(A)/MAX INPUT POWER(W)			0.59×2/57×2	0.58×2/57×2	0.52×2/57×2	10.0/6.200k	10.0/6.500k	10.0/6.750k	/	
STARTING CURRENT(A)/COMP OUTPUT(W)			-	-	-	5.78/3.0k	5.55/3.0k	5.40/3.0k	/	
NETWORK IMPEDANCE (ΩMAX.)				-			-			
FM OUTPUT (W)				47×2			90×2		/	
MOISTURE REMOVAL VOLUME		L/h(Pt/h)	7.9 (3.95×2)		(16.6)		-			
External static pressure		Pa		-						
I/D AIR FLOW	COOL	m^3/min (ft^3/min)	[18/14.5/11.5 (636/512/406)]×2							
	HEAT	m^3/min (ft^3/min)	[18/14.5/11.5 (636/512/406)]×2							
O/D AIR FLOW	COOL	m^3/min (ft^3/min)				130		(4591)		
	HEAT	m^3/min (ft^3/min)				110		(3885)		
REFRIGERANT TYPE, AMOUNT g(oz)						R410A	3.40k	(119.9)	/	
PROD IM	HEIGHT : H mm(inch)		300 (11-1/32)			1416 (55-3/4)			/	
	WIDTH : W mm(inch)		1065 (41-23/64)			940 (37-1/32)			/	
	DEPTH : D mm(inch)		230 (9-1/32)			340 (13-13/32)			/	
PAC D IM	HEIGHT : H mm		310			1556			/	
	WIDTH : W mm		1140			1055			/	
	DEPTH : D mm		380			485			/	
MASS	(NET) kg(lb)		14.5 (32)			98 (216)			/	
	(GROSS) kg(lb)		18 (40)			108 (238)			/	
LAYERS LIMIT (actually)			15 (16)			1 (2)				
Operation Condition		Cool O.D(DBT)	18°C ~ 32°C			-15°C ~ 46°C				
		Heat O.D(DBT)	16°C ~ 30°C			-20°C ~ 24°C				
PIPING	PIPE DIAMETER mm (inch)		(Liquid)ø9.52(3/8) (Gas)ø15.88(5/8)			(Liquid)ø9.52(3/8) (Gas)ø15.88(5/8)				
	CONNECT METHOD, STD LENGTH m (ft)		flared type, 5.0(16.4)			flared type, 5.0(16.4)				
	PIPE LENGTH RANGE m (ft)		5 ~ 75 (16.4 ~ 246.1)						~	~
	I/D&O/D HEIGHT DIFFERENCE m (ft)		15 (OD located lower) / 30 (OD located higher) (49.2/98.4)							
	ADD GAS AMOUNT g/m (oz/ft)		50 (0.538)							
	PIPE LENGTH FOR ADDITIONAL GAS m (ft)		30 (98.4)							

*1: In case it is necessary to indicate the air □ow volume in (l/s), the value in (m^3/min.) shall be multiplied by 16.7 and rounded down the decimal point.
*2: If the EUROVENT Certi□ed models can be operated under the □extra-low□temperature condition, -7□C dry bulb and -8□C wet-bulb temperatures with rated voltage 230 V shall be used.
*3: Network Impedance shall be applicable for EUROPE and CHINA models.
*4: The annual consumption is calculated by multiplying the input power at 230 V (400 V) by an average of 500 hours per year in cooling mode.
*5: EER and COP classification is at 230 V (400 V) only in accordance with EU directive 2002/31/EC.
*6: SEER and SCOP classification is at 230V(400V) only in accordance with EN-14825. For heating, SCOP indicates the value of only Average heating season, Other fiche data indicates in an attached sheet.

Single -Type

1-1. Unit Speci□cations

PE1

3. Wall Mounted Type S-71PK1E5A / U-71PE1E8A

INDOOR		MODEL	S-71PK1E5A							
PANEL		MODEL	-				-			
OUTDOOR		MODEL				U-71PE1E8A				
Branch pipe		MODEL	-							
PERFORMANCE TEST CONDITION			ISO5151 / EN14511 / EN14825 / EN12102							
POWER SUPPLY		ø, Hz	1ø 50Hz			3ø 50Hz				
		V	220	230	240	380	400	415	Min	Max
COOLING	CAPACITY	kW	7.1	7.1	7.1				3.2	8.0
		BTU/h	24200	24200	24200				10900	27300
	CURRENT	A	0.59	0.58	0.52	3.25	3.15	3.05	-	-
	INPUT POWER	W	57	57	57	2.030k	2.030k	2.030k	-	-
		TOTAL W		-		2.090k	2.090k	2.090k	560	2.650k
	ANNUAL CONSUMPTION	TOTAL kWh ※4		-		-	1045	-	-	-
	EER/EER CLASS	TOTAL(W/W)※5("A"~"G")	-	-	-	3.40	3.40 / A	3.40	5.71	3.02
	Erp ※6 Pdsign	kW	-	-	-	-	7.1	-		
	Erp ※6 SEER	(W/W)	-	-	-	-	6.1	-		
	Erp ※6 Annual consumption	kWh	-	-	-	-	407	-		
	Erp ※6 Class		-	-	-	-	A++	-		
	POWER FACTOR	%	-	-	-	95	93	93	-	-
	NOISE INDOOR (H/M/L)	dB-A		47/44/40						
		Power Level dB		64/59/54						
	NOISE OUTDOOR (H/L)	dB-A					48/-			
		Power Level dB					65/-			
HEATING	CAPACITY	kW	8.0	8.0	8.0				2.8	9.0
		BTU/h	27300	27300	27300				9600	30700
	CURRENT	A	0.59	0.58	0.52	3.30	3.20	3.10	-	-
	INPUT POWER	W	57	57	57	2.070k	2.070k	2.070k	-	-
		TOTAL W		-		2.130k	2.130k	2.130k	500	2.900k
	COP/COP CLASS	TOTAL(W/W)※5("A"~"G")	-	-	-	3.76	3.76 / A	3.76	5.60	3.10
	Erp ※6 Pdsign	kW	-	-	-	-	7.1	-		
	Erp ※6 Tbivalen	°C	-	-	-	-	-9	-		
	Erp ※6 SCOP	(W/W)	-	-	-	-	3.8	-		
	Erp ※6 Annual consumption	kWh	-	-	-	-	2616	-		
	Erp ※6 Class		-	-	-	-	A	-		
	POWER FACTOR	%	-	-	-	95	93	93	-	-
	NOISE INDOOR (H/M/L)	dB-A		47/44/40			-		/	/
		Power Level dB		64/59/54			-			
	NOISE OUTDOOR (H/L)	dB-A		-			50/-		/	/
		Power Level dB		-			67/-			
EXTRA LOW TEMP	Total CAPACITY(kW)/INPUT POWER(W)/COP					-				
MAX CURRENT(A)/MAX INPUT POWER(W)			0.59/57	0.58/57	0.52/57	7.0/4.150k	7.0/4.360k	7.0/4.530k	/	
STARTING CURRENT(A)/COMP OUTPUT(W)			-	-	-	3.30/2.0k	3.20/2.0k	3.10/2.0k	/	
NETWORK IMPEDANCE (ΩMAX.)				-			-			
FM OUTPUT (W)				47			90		/	
MOISTURE REMOVAL VOLUME		L/h(Pt/h)	4.2		(8.8)		-			
External static pressure		Pa		-						
I/D AIR FLOW	COOL	m^3/min (ft^3/min)		18/14.5/11.5 (636/512/406)						
	HEAT	m^3/min (ft^3/min)		18/14.5/11.5 (636/512/406)						
O/D AIR FLOW	COOL	m^3/min (ft^3/min)				60		(2119)		
	HEAT	m^3/min (ft^3/min)				60		(2119)		
REFRIGERANT TYPE, AMOUNT g(oz)						R410A	2.35k	(82.9)	/	
PROD IM	HEIGHT : H mm(inch)			300 (11-1/32)			996 (39-7/32)		/	
	WIDTH : W mm(inch)			1065 (41-23/64)			940 (37-1/32)		/	
	DEPTH : D mm(inch)			230 (9-1/32)			340 (13-13/32)		/	
PACK IM	HEIGHT : H mm			310			1136		/	
	WIDTH : W mm			1140			1055		/	
	DEPTH : D mm			380			485		/	
MASS	(NET) kg(lb)			14.5 (32)			71 (157)		/	
	(GROSS) kg(lb)			18 (40)			79 (174)		/	
LAYERS LIMIT (actually)				15 (16)			2 (3)			
Operation Condition		Cool O.D(DBT)		18°C ~ 32°C			-15°C ~ 46°C			
		Heat O.D(DBT)		16°C ~ 30°C			-20°C ~ 24°C			
PIPING	PIPE DIAMETER mm (inch)		(Liquid)ø9.52(3/8) (Gas)ø15.88(5/8)			(Liquid)ø9.52(3/8) (Gas)ø15.88(5/8)				
	CONNECT METHOD, STD LENGTH m (ft)		flared type, 5.0(16.4)			flared type, 5.0(16.4)				
	PIPE LENGTH RANGE m (ft)		5 ~ 50 (16.4 ~ 164.0)						~	~
	I/D&O/D HEIGHT DIFFERENCE m (ft)		15 (OD located lower) / 30 (OD located higher) (49.2/98.4)							
	ADD GAS AMOUNT g/m (oz/ft)		50 (0.538)							
	PIPE LENGTH FOR ADDITIONAL GAS m (ft)		30 (98.4)							

*1: In case it is necessary to indicate the air □ow volume in (l/s), the value in (m^3/min.) shall be multiplied by 16.7 and rounded down the decimal point.
*2: If the EUROVENT Certi□ed models can be operated under the □extra-low□temperature condition, -7□C dry bulb and -8□C wet-bulb temperatures with rated voltage 230 V shall be used.
*3: Network Impedance shall be applicable for EUROPE and CHINA models.
*4: The annual consumption is calculated by multiplying the input power at 230 V (400 V) by an average of 500 hours per year in cooling mode.
*5: EER and COP classification is at 230 V (400 V) only in accordance with EU directive 2002/31/EC.
*6: SEER and SCOP classification is at 230V(400V) only in accordance with EN-14825. For heating, SCOP indicates the value of only Average heating season, Other fiche data indicates in an attached sheet.

Simultaneous (Twin) -Type

1-1. Unit Speci□cations

PE1

3. Wall Mounted Type S-71PK1E5A×2 / U-140PE1E8A

INDOOR		MODEL	S-71PK1E5A×2							
PANEL		MODEL	-			-				
OUTDOOR		MODEL				U-140PE1E8A				
Branch pipe		MODEL	CZ-P155BK1							
PERFORMANCE TEST CONDITION			ISO5151 / EN14511 / EN12102							
POWER SUPPLY		ø, Hz	1ø 50Hz			3ø 50Hz				
		V	220	230	240	380	400	415	Min	Max
COOLING	CAPACITY	kW	14.0	14.0	14.0				3.3	15.5
		BTU/h	47800	47800	47800				11300	52900
	CURRENT	A	0.59×2	0.58×2	0.52×2	7.12	6.83	6.66	-	-
	INPUT POWER	W	57×2	57×2	57×2	4.565k	4.565k	4.565k	-	-
		TOTAL W		-		4.680k	4.680k	4.680k	840	6.000k
	ANNUAL CONSUMPTION	TOTAL kWh ※4		-		-	2340	-	-	-
	EER/EER CLASS	TOTAL(W/W)※5("A"~"G")	-	-	-	2.99	2.99 / C	2.99	3.93	2.58
	Erp ※6 Pdsign	kW	-	-	-	-	-	-		
	Erp ※6 SEER	(W/W)	-	-	-	-	-	-		
	Erp ※6 Annual consumption	kWh	-	-	-	-	-	-		
	Erp ※6 Class		-	-	-	-	-	-		
	POWER FACTOR	%	-	-	-	97	96	95	-	-
	NOISE INDOOR (H/M/L)	dB-A		47/44/40						
		Power Level dB		64/59/54						
	NOISE OUTDOOR (H/L)	dB-A					54/-			
		Power Level dB					71/-			
HEATING	CAPACITY	kW	16.0	16.0	16.0				4.1	18.0
		BTU/h	54600	54600	54600				14000	61400
	CURRENT	A	0.59×2	0.58×2	0.52×2	7.31	6.94	6.76	-	-
	INPUT POWER	W	57×2	57×2	57×2	4.685k	4.685k	4.685k	-	-
		TOTAL W		-		4.800k	4.800k	4.800k	900	5.900k
	COP/COP CLASS	TOTAL(W/W)※5("A"~"G")	-	-	-	3.33	3.33 / C	3.33	4.56	3.05
	Erp ※6 Pdsign	kW	-	-	-	-	-	-		
	Erp ※6 Tbivalen	°C	-	-	-	-	-	-		
	Erp ※6 SCOP	(W/W)	-	-	-	-	-	-		
	Erp ※6 Annual consumption	kWh	-	-	-	-	-	-		
	Erp ※6 Class		-	-	-	-	-	-		
	POWER FACTOR	%	-	-	-	97	96	95	-	-
	NOISE INDOOR (H/M/L)	dB-A		47/44/40			-		/	/
		Power Level dB		64/59/54			-			
	NOISE OUTDOOR (H/L)	dB-A		-			55/-		/	/
		Power Level dB		-			71/-			
EXTRA LOW TEMP	Total CAPACITY(kW)/INPUT POWER(W)/COP				-					
MAX CURRENT(A)/MAX INPUT POWER(W)			0.59×2/57×2	0.58×2/57×2	0.52×2/57×2	11.0/6.800k	11.0/7.150k	11.0/7.450k	/	
STARTING CURRENT(A)/COMP OUTPUT(W)			-	-	-	7.31/3.0k	6.94/3.0k	6.76/3.0k	/	
NETWORK IMPEDANCE (ΩMAX.)				-			-			
FM OUTPUT (W)				47×2			90×2		/	
MOISTURE REMOVAL VOLUME		L/h(Pt/h)	9.0 (4.5×2)		(18.9)		-			
External static pressure		Pa		-						
I/D AIR FLOW	COOL	m^3/min (ft^3/min)	[18/14.5/11.5 (636/512/406)]×2							
	HEAT	m^3/min (ft^3/min)	[18/14.5/11.5 (636/512/406)]×2							
O/D AIR FLOW	COOL	m^3/min (ft^3/min)				135		(4767)		
	HEAT	m^3/min (ft^3/min)				120		(4238)		
REFRIGERANT TYPE, AMOUNT g(oz)						R410A	3.40k	(119.9)	/	
PROD DIM	HEIGHT : H mm(inch)		300 (11-1/32)			1416 (55-3/4)			/	
	WIDTH : W mm(inch)		1065 (41-23/64)			940 (37-1/32)			/	
	DEPTH : D mm(inch)		230 (9-1/32)			340 (13-13/32)			/	
PACK DIM	HEIGHT : H mm		310			1556			/	
	WIDTH : W mm		1140			1055			/	
	DEPTH : D mm		380			485			/	
MASS	(NET) kg(lb)		14.5 (32)			98 (216)			/	
	(GROSS) kg(lb)		18 (40)			108 (238)			/	
LAYERS LIMIT (actually)			15 (16)			1 (2)				
Operation Condition		Cool O.D(DBT)	18°C ~ 32°C			-15°C ~ 46°C				
		Heat O.D(DBT)	16°C ~ 30°C			-20°C ~ 24°C				
PIPING	PIPE DIAMETER mm (inch)		(Liquid)ø9.52(3/8) (Gas)ø15.88(5/8)			(Liquid)ø9.52(3/8) (Gas)ø15.88(5/8)				
	CONNECT METHOD, STD LENGTH m (ft)		flared type, 5.0(16.4)			flared type, 5.0(16.4)				
	PIPE LENGTH RANGE m (ft)		5 ~ 75 (16.4 ~ 246.1)						~	~
	I/D&O/D HEIGHT DIFFERENCE m (ft)		15 (OD located lower) / 30 (OD located higher) (49.2/98.4)							
	ADD GAS AMOUNT g/m (oz/ft)		50 (0.538)							
	PIPE LENGTH FOR ADDITIONAL GAS m (ft)		30 (98.4)							

*1: In case it is necessary to indicate the air □ow volume in (l/s), the value in (m^3/min.) shall be multiplied by 16.7 and rounded down the decimal point.
*2: If the EUROVENT Certi□ed models can be operated under the □extra-low□temperature condition, -7□C dry bulb and -8□C wet-bulb temperatures with rated voltage 230 V shall be used.
*3: Network Impedance shall be applicable for EUROPE and CHINA models.
*4: The annual consumption is calculated by multiplying the input power at 230 V (400 V) by an average of 500 hours per year in cooling mode.
*5: EER and COP classification is at 230 V (400 V) only in accordance with EU directive 2002/31/EC.
*6: SEER and SCOP classification is at 230V(400V) only in accordance with EN-14825. For heating, SCOP indicates the value of only Average heating season, Other fiche data indicates in an attached sheet.

Single -Type

1-1. Unit Speci□cations

PE1

3. Wall Mounted Type S-100PK1E5A / U-100PE1E8A

INDOOR		MODEL	S-100PK1E5A							
PANEL		MODEL	-				-			
OUTDOOR		MODEL				U-100PE1E8A				
Branch pipe		MODEL	-							
PERFORMANCE TEST CONDITION			ISO5151 / EN14511 / EN14825 / EN12102							
POWER SUPPLY		ø, Hz	1ø 50Hz			3ø 50Hz				
		V	220	230	240	380	400	415	Min	Max
COOLING	CAPACITY	kW	9.5	9.5	9.5				3.3	10.5
		BTU/h	32400	32400	32400				11300	35800
	CURRENT	A	0.61	0.59	0.55	4.60	4.40	4.30	-	-
	INPUT POWER	W	65	65	65	2.855k	2.855k	2.855k	-	-
		TOTAL W		-		2.920k	2.920k	2.920k	840	3.400k
	ANNUAL CONSUMPTION	TOTAL kWh ※4		-		-	1460	-	-	-
	EER/EER CLASS	TOTAL(W/W) ※5("A"~"G")	-	-	-	3.25	3.25 / A	3.25	3.93	3.09
	Erp ※6 Pdsign	kW	-	-	-	-	9.5	-		
	Erp ※6 SEER	(W/W)	-	-	-	-	6.0	-		
	Erp ※6 Annual consumption	kWh	-	-	-	-	554	-		
	Erp ※6 Class		-	-	-	-	A+	-		
	POWER FACTOR	%	-	-	-	94	94	92	-	-
	NOISE INDOOR (H/M/L)	dB-A		49/45/41						
		Power Level dB		65/60/55						
	NOISE OUTDOOR (H/L)	dB-A					52/-			
		Power Level dB					69/-			
HEATING	CAPACITY	kW	9.5	9.5	9.5				4.1	11.5
		BTU/h	32400	32400	32400				14000	39200
	CURRENT	A	0.62	0.60	0.56	3.85	3.70	3.60	-	-
	INPUT POWER	W	65	65	65	2.405k	2.405k	2.405k	-	-
		TOTAL W		-		2.470k	2.470k	2.470k	900	3.350k
	COP/COP CLASS	TOTAL(W/W) ※5("A"~"G")	-	-	-	3.85	3.85 / A	3.85	4.56	3.43
	Erp ※6 Pdsign	kW	-	-	-	-	9.5	-		
	Erp ※6 Tbivalen	°C	-	-	-	-	-10	-		
	Erp ※6 SCOP	(W/W)	-	-	-	-	3.8	-		
	Erp ※6 Annual consumption	kWh	-	-	-	-	3500	-		
	Erp ※6 Class		-	-	-	-	A	-		
	POWER FACTOR	%	-	-	-	95	94	93	-	-
	NOISE INDOOR (H/M/L)	dB-A		49/45/41			-		/	/
		Power Level dB		65/60/55			-			
	NOISE OUTDOOR (H/L)	dB-A		-			52/-		/	/
		Power Level dB		-			69/-			
EXTRA LOW TEMP	Total CAPACITY(kW)/INPUT POWER(W)/COP					-				
MAX CURRENT(A)/MAX INPUT POWER(W)			0.62/65	0.60/65	0.56/65	9.0/5.630 k	9.0/5.860 k	9.0/6.020 k	/	
STARTING CURRENT(A)/COMP OUTPUT(W)			-	-	-	4.60/3.0k	4.40/3.0k	4.30/3.0k	/	
NETWORK IMPEDANCE (ΩMAX.)				-			-			
FM OUTPUT (W)				47			90×2		/	
MOISTURE REMOVAL VOLUME		L/h(Pt/h)	5.7		(12.0)		-			
External static pressure		Pa		-						
I/D AIR FLOW	COOL	m³/min (ft³/min)		19/16.5/13 (671/583/459)						
	HEAT	m³/min (ft³/min)		19/16.5/13 (671/583/459)						
O/D AIR FLOW	COOL	m³/min (ft³/min)				110		(3885)		
	HEAT	m³/min (ft³/min)				95		(3355)		
REFRIGERANT TYPE, AMOUNT g(oz)						R410A	3.40k	(119.9)	/	
PROD	DIM	HEIGHT : H mm(inch)		300 (11-1/32)			1416 (55-3/4)		/	
		WIDTH : W mm(inch)		1065 (41-23/64)			940 (37-1/32)		/	
		DEPTH : D mm(inch)		230 (9-1/32)			340 (13-13/32)		/	
PAC	DIM	HEIGHT : H mm		310			1556		/	
		WIDTH : W mm		1140			1055		/	
		DEPTH : D mm		380			485		/	
MASS		(NET) kg(lb)		14.5 (32)			98 (216)		/	
		(GROSS) kg(lb)		18 (40)			108 (238)		/	
LAYERS LIMIT (actually)				15 (16)			1 (2)			
Operation Condition		Cool O.D(DBT)		18°C ~ 32°C			-15°C ~ 46°C			
		Heat O.D(DBT)		16°C ~ 30°C			-20°C ~ 24°C			
PIPING	PIPE DIAMETER mm (inch)		(Liquid)ø9.52(3/8) (Gas)ø15.88(5/8)			(Liquid)ø9.52(3/8) (Gas)ø15.88(5/8)				
	CONNECT METHOD, STD LENGTH m (ft)		flared type, 5.0(16.4)			flared type, 5.0(16.4)				
	PIPE LENGTH RANGE m (ft)			5 ~ 75 (16.4 ~ 246.1)					~	~
	I/D&O/D HEIGHT DIFFERENCE m (ft)		15 (OD located lower) / 30 (OD located higher) (49.2/98.4)							
	ADD GAS AMOUNT g/m (oz/ft)			50 (0.538)						
	PIPE LENGTH FOR ADDITIONAL GAS m (ft)			30 (98.4)						

*1: In case it is necessary to indicate the air □ow volume in (l/s), the value in (m^3/min.) shall be multiplied by 16.7 and rounded down the decimal point.
*2: If the EUROVENT Certi□ed models can be operated under the □extra-low□temperature condition, -7□C dry bulb and -8□C wet-bulb temperatures with rated voltage 230 V shall be used.
*3: Network Impedance shall be applicable for EUROPE and CHINA models.
*4: The annual consumption is calculated by multiplying the input power at 230 V (400 V) by an average of 500 hours per year in cooling mode.
*5: EER and COP classification is at 230 V (400 V) only in accordance with EU directive 2002/31/EC.
*6: SEER and SCOP classification is at 230V(400V) only in accordance with EN-14825. For heating, SCOP indicates the value of only Average heating season, Other fiche data indicates in an attached sheet.

Simultaneous (Twin) -Type

1-1. Unit Speci□cations

PE1

4. Low Silhouette Ducted Type S-36PF1E5A×2 / U-71PE1E5A

INDOOR		MODEL	S-36PF1E5A×2							
OUTDOOR		MODEL				U-71PE1E5A				
Branch pipe		MODEL	CZ-P155BK1							
PERFORMANCE TEST CONDITION			ISO13253 / EN14511 / EN14825 / EN12102							
POWER SUPPLY		ø, Hz	1ø 50Hz			1ø 50Hz				
		V	220	230	240	220	230	240	Min	Max
COOLING	CAPACITY	kW	7.10	7.10	7.10				2.5	8.0
		BTU/h	24200	24200	24200				8500	27300
	CURRENT	A	0.60×2	0.57×2	0.56×2	8.90	8.60	8.30	-	-
	INPUT POWER	W	70×2	70×2	70×2	1.730k	1.730k	1.730k	-	-
		TOTAL W		-		1.870k	1.870k	1.870k	530	2.650k
	ANNUAL CONSUMPTION	TOTAL kWh ※4		-		-	935	-	-	-
	EER/EER CLASS	TOTAL(W/W)※5/("A"~"G")	-	-	-	3.80	3.80 / A	3.80	4.72	3.02
	Erp ※6 Pdsign	kW	-	-	-	-	7.1	-		
	Erp ※6 SEER	(W/W)	-	-	-	-	6.2	-		
	Erp ※6 Annual consumption	kWh	-	-	-	-	401	-		
	Erp ※6 Class		-	-	-	-	A++	-		
	POWER FACTOR	%	-	-	-	96	95	94	-	-
	NOISE INDOOR (H/M/L)	dB-A		33/29/25						
		Power Level dB		55/51/47						
	NOISE OUTDOOR (H/L)	dB-A					48/-			
		Power Level dB					65/-			
HEATING	CAPACITY	kW	8.0	8.0	8.0				2.0	9.0
		BTU/h	27300	27300	27300				6800	30700
	CURRENT	A	0.60×2	0.57×2	0.56×2	9.90	9.50	9.20	-	-
	INPUT POWER	W	70×2	70×2	70×2	1.960k	1.960k	1.960k	-	-
		TOTAL W		-		2.100k	2.100k	2.100k	480	2.900k
	COP/COP CLASS	TOTAL(W/W)※5/("A"~"G")	-	-	-	3.81	3.81 / A	3.81	4.17	3.10
	Erp ※6 Pdsign	kW	-	-	-	-	7.1	-		
	Erp ※6 Tbivalen	°C	-	-	-	-	-9	-		
	Erp ※6 SCOP	(W/W)	-	-	-	-	4.0	-		
	Erp ※6 Annual consumption	kWh	-	-	-	-	2485	-		
	Erp ※6 Class		-	-	-	-	A+	-		
	POWER FACTOR	%	-	-	-	96	96	95	-	-
	NOISE INDOOR (H/M/L)	dB-A		33/29/25			-		/	/
		Power Level dB		55/51/47			-			
	NOISE OUTDOOR (H/L)	dB-A		-			50/-		/	/
		Power Level dB		-			67/-			
EXTRA LOW TEMP	Total CAPACITY(kW)/INPUT POWER(W)/COP					-				
MAX CURRENT(A)/MAX INPUT POWER(W)			0.86×2/105×2	0.82×2/105×2	0.79×2/105×2	18.0/3.800k	18.0/3.930k	18.0/4.060k	/	
STARTING CURRENT(A)/COMP OUTPUT(W)			-	-	-	9.90/2.0k	9.50/2.0k	9.20/2.0k	/	
NETWORK IMPEDANCE (ΩMAX.)				-			-			
FM OUTPUT (W)				120			90		/	
MOISTURE REMOVAL VOLUME		L/h(Pt/h)	4.2	(2.1×2)	(8.8)		-			
External static pressure		Pa	70 (MIN10 - MAX150)							
I/D AIR FLOW	COOL	m^3/min (ft^3/min)	[14/13/10 (494/459/353)]×2							
	HEAT	m^3/min (ft^3/min)	[14/13/10 (494/459/353)]×2							
O/D AIR FLOW	COOL	m^3/min (ft^3/min)				60		(2119)		
	HEAT	m^3/min (ft^3/min)				60		(2119)		
REFRIGERANT TYPE, AMOUNT g(oz)						R410A	2.35k	(82.9)	/	
PROD IM	HEIGHT : H mm(inch)		290 (11-13/32)			996 (39-7/32)			/	
	WIDTH : W mm(inch)		800 (31-1/2)			940 (37-1/32)			/	
	DEPTH : D mm(inch)		700 (27-9/16)			340 (13-13/32)			/	
PACK IM	HEIGHT : H mm		355			1136			/	
	WIDTH : W mm		1014			1055			/	
	DEPTH : D mm		850			485			/	
MASS	(NET) kg(lb)		28 (62)			69 (152)			/	
	(GROSS) kg(lb)		35 (78)			77 (170)			/	
LAYERS LIMIT (actually)			9 (10)			2 (3)				
Operation Condition		Cool O.D(DBT)	18°C ~ 32°C			-15°C ~ 46°C				
		Heat O.D(DBT)	16°C ~ 30°C			-20°C ~ 24°C				
PIPING	PIPE DIAMETER mm (inch)		(Liquid)ø6.35(1/4) (Gas)ø12.7(1/2)			(Liquid)ø9.52(3/8) (Gas)ø15.88(5/8)				
	CONNECT METHOD, STD LENGTH m (ft)		flared type, 5.0(16.4)			flared type, 5.0(16.4)				
	PIPE LENGTH RANGE m (ft)		5 ~ 50 (16.4 ~ 164.0)						~	~
	I/D&O/D HEIGHT DIFFERENCE m (ft)		15 (OD located lower) / 30 (OD located higher) (49.2/98.4)							
	ADD GAS AMOUNT g/m (oz/ft)		50 (0.538)							
	PIPE LENGTH FOR ADDITIONAL GAS m (ft)		30 (98.4)							

*1: In case it is necessary to indicate the air □ow volume in (l/s), the value in (m^3/min.) shall be multiplied by 16.7 and rounded down the decimal point.
*2: If the EUROVENT Certi□ed models can be operated under the □extra-low□temperature condition, -7□C dry bulb and -8□C wet-bulb temperatures with rated voltage 230 V shall be used.
*3: Network Impedance shall be applicable for EUROPE and CHINA models.
*4: The annual consumption is calculated by multiplying the input power at 230 V (400 V) by an average of 500 hours per year in cooling mode.
*5: EER and COP classification is at 230 V (400 V) only in accordance with EU directive 2002/31/EC.
*6: SEER and SCOP classification is at 230V(400V) only in accordance with EN-14825. For heating, SCOP indicates the value of only Average heating season, Other fiche data indicates in an attached sheet.

Simultaneous (Triple) -Type

1-1. Unit Speci□cations

PE1

4. Low Silhouette Ducted Type S-36PF1E5A×3 / U-100PE1E5A

INDOOR		MODEL	S-36PF1E5A×3							
OUTDOOR		MODEL				U-100PE1E5A				
Branch pipe		MODEL	CZ-P3HPC2							
PERFORMANCE TEST CONDITION			ISO13253 / EN14511 / EN14825 / EN12102							
POWER SUPPLY		ø, Hz	1ø 50Hz			1ø 50Hz				
		V	220	230	240	220	230	240	Min	Max
COOLING	CAPACITY	kW	10.0	10.0	10.0				3.3	12.5
		BTU/h	34100	34100	34100				11300	42700
	CURRENT	A	0.6×3	0.57×3	0.56×3	11.0	10.6	10.3	-	-
	INPUT POWER	W	70×3	70×3	70×3	2.245k	2.245k	2.245k	-	-
		TOTAL W		-		2.455k	2.455k	2.455k	840	3.700k
	ANNUAL CONSUMPTION	TOTAL kWh ※4		-		-	1227.5	-	-	-
	EER/EER CLASS	TOTAL(W/W)※5/("A"~"G")	-	-	-	4.07	4.07 / A	4.07	3.93	3.38
	Erp ※6 Pdsign	kW	-	-	-	-	10.0	-		
	Erp ※6 SEER	(W/W)	-	-	-	-	5.8	-		
	Erp ※6 Annual consumption	kWh	-	-	-	-	603	-		
	Erp ※6 Class		-	-	-	-	A+	-		
	POWER FACTOR	%	-	-	-	93	92	91	-	-
	NOISE INDOOR (H/M/L)	dB-A		33/29/25						
		Power Level dB		55/51/47						
	NOISE OUTDOOR (H/L)	dB-A					52/-			
		Power Level dB					69/-			
HEATING	CAPACITY	kW	11.2	11.2	11.2				4.1	14.0
		BTU/h	38200	38200	38200				14000	47800
	CURRENT	A	0.6×3	0.57×3	0.56×3	11.6	11.2	10.7	-	-
	INPUT POWER	W	70×3	70×3	70×3	2.400k	2.400k	2.400k	-	-
		TOTAL W		-		2.610k	2.610k	2.610k	900	4.400k
	COP/COP CLASS	TOTAL(W/W)※5/("A"~"G")	-	-	-	4.29	4.29 / A	4.29	4.56	3.18
	Erp ※6 Pdsign	kW	-	-	-	-	10.0	-		
	Erp ※6 Tbivalen	°C	-	-	-	-	-10	-		
	Erp ※6 SCOP	(W/W)	-	-	-	-	3.8	-		
	Erp ※6 Annual consumption	kWh	-	-	-	-	3684	-		
	Erp ※6 Class		-	-	-	-	A	-		
	POWER FACTOR	%	-	-	-	94	94	93	-	-
	NOISE INDOOR (H/M/L)	dB-A		33/29/25			-		/	/
		Power Level dB		55/51/47			-			
	NOISE OUTDOOR (H/L)	dB-A		-			52/-		/	/
		Power Level dB		-			69/-			
EXTRA LOW TEMP	Total CAPACITY(kW)/INPUT POWER(W)/COP					-				
MAX CURRENT(A)/MAX INPUT POWER(W)			0.86×3/105×3	0.82×3/105×3	0.79×3/105×3	25.0/5.350k	25.0/5.550k	25.0/5.750k	/	
STARTING CURRENT(A)/COMP OUTPUT(W)			-	-	-	11.6/3.0k	11.2/3.0k	10.7/3.0k	/	
NETWORK IMPEDANCE (ΩMAX.)				-			-			
FM OUTPUT (W)				120			90x2		/	
MOISTURE REMOVAL VOLUME		L/h(Pt/h)	6.0	(2.0×3)	(12.6)		-			
External static pressure		Pa		70 (MIN10 - MAX150)						
I/D AIR FLOW	COOL	m^3/min (ft^3/min)		[14/13/10 (494/459/353)]×3						
	HEAT	m^3/min (ft^3/min)		[14/13/10 (494/459/353)]×3						
O/D AIR FLOW	COOL	m^3/min (ft^3/min)					110	(3885)		
	HEAT	m^3/min (ft^3/min)					95	(3355)		
REFRIGERANT TYPE, AMOUNT g(oz)						R410A	3.40k	(119.9)	/	
PROD DIM	HEIGHT : H mm(inch)			290 (11-13/32)			1416 (55-3/4)		/	
	WIDTH : W mm(inch)			800 (31-1/2)			940 (37-1/32)		/	
	DEPTH : D mm(inch)			700 (27-9/16)			340 (13-13/32)		/	
PAC DIM	HEIGHT : H mm			355			1556		/	
	WIDTH : W mm			1014			1055		/	
	DEPTH : D mm			850			485		/	
MASS	(NET) kg(lb)			28 (62)			98 (216)		/	
	(GROSS) kg(lb)			35 (78)			108 (238)		/	
LAYERS LIMIT (actually)				9 (10)			1 (2)			
Operation Condition		Cool O.D(DBT)		18°C ~ 32°C			-15°C ~ 46°C			
		Heat O.D(DBT)		16°C ~ 30°C			-20°C ~ 24°C			
PIPING	PIPE DIAMETER mm (inch)			(Liquid)ø6.35(1/4) (Gas)ø12.7(1/2)			(Liquid)ø9.52(3/8) (Gas)ø15.88(5/8)			
	CONNECT METHOD, STD LENGTH m (ft)			flared type, 5.0(16.4)			flared type, 5.0(16.4)			
	PIPE LENGTH RANGE m (ft)			5 ~ 75 (16.4 ~ 246.1)					~	~
	I/D&O/D HEIGHT DIFFERENCE m (ft)			15 (OD located lower) / 30 (OD located higher) (49.2/98.4)						
	ADD GAS AMOUNT g/m (oz/ft)			50 (0.538)						
	PIPE LENGTH FOR ADDITIONAL GAS m (ft)			20 (65.6)						

*1: In case it is necessary to indicate the air □ow volume in (l/s), the value in (m^3/min.) shall be multiplied by 16.7 and rounded down the decimal point.
*2: If the EUROVENT Certi□ed models can be operated under the □extra-low□temperature condition, -7□C dry bulb and -8□C wet-bulb temperatures with rated voltage 230 V shall be used.
*3: Network Impedance shall be applicable for EUROPE and CHINA models.
*4: The annual consumption is calculated by multiplying the input power at 230 V (400 V) by an average of 500 hours per year in cooling mode.
*5: EER and COP classification is at 230 V (400 V) only in accordance with EU directive 2002/31/EC.
*6: SEER and SCOP classification is at 230V(400V) only in accordance with EN-14825. For heating, SCOP indicates the value of only Average heating season, Other fiche data indicates in an attached sheet.

Simultaneous (Double-Twin) -Type

1-1. Unit Speci□cations

PE1

4. Low Silhouette Ducted Type S-36PF1E5A×4 / U-125PE1E5A

INDOOR		MODEL	S-36PF1E5A×4							
OUTDOOR		MODEL				U-125PE1E5A				
Branch pipe		MODEL	CZ-P155BK1×3							
PERFORMANCE TEST CONDITION			ISO13253 / EN14511 / EN12102							
POWER SUPPLY		ø, Hz	1ø 50Hz			1ø 50Hz				
		V	220	230	240	220	230	240	Min	Max
COOLING	CAPACITY	kW	12.5	12.5	12.5				3.3	14.0
		BTU/h	42700	42700	42700				11300	47800
	CURRENT	A	0.6×4	0.57×4	0.56×4	16.6	15.9	15.3	-	-
	INPUT POWER	W	70×4	70×4	70×4	3.355k	3.355k	3.355k	-	-
		TOTAL W		-		3.635k	3.635k	3.635k	840	4.600k
	ANNUAL CONSUMPTION	TOTAL kWh ※4		-		-	1817.5	-	-	-
	EER/EER CLASS	TOTAL(W/W)※5/("A"~"G")	-	-	-	3.44	3.44 / A	3.44	3.93	3.04
	Erp ※6 Pdsign	kW	-	-	-	-	-	-		
	Erp ※6 SEER	(W/W)	-	-	-	-	-	-		
	Erp ※6 Annual consumption	kWh	-	-	-	-	-	-		
	Erp ※6 Class		-	-	-	-	-	-		
	POWER FACTOR	%	-	-	-	92	92	91	-	-
	NOISE INDOOR (H/M/L)	dB-A		33/29/25						
		Power Level dB		55/51/47						
	NOISE OUTDOOR (H/L)	dB-A					53/-			
		Power Level dB					70/-			
HEATING	CAPACITY	kW	14.0	14.0	14.0				4.1	16.0
		BTU/h	47800	47800	47800				14000	54600
	CURRENT	A	0.6×4	0.57×4	0.56×4	16.3	15.8	15.1	-	-
	INPUT POWER	W	70×4	70×4	70×4	3.270k	3.270k	3.270k	-	-
		TOTAL W		-		3.550k	3.550k	3.550k	900	5.200k
	COP/COP CLASS	TOTAL(W/W)※5/("A"~"G")	-	-	-	3.94	3.94 / A	3.94	4.56	3.08
	Erp ※6 Pdsign	kW	-	-	-	-	-	-		
	Erp ※6 Tbivalen	°C	-	-	-	-	-	-		
	Erp ※6 SCOP	(W/W)	-	-	-	-	-	-		
	Erp ※6 Annual consumption	kWh	-	-	-	-	-	-		
	Erp ※6 Class		-	-	-	-	-	-		
	POWER FACTOR	%	-	-	-	91	90	90	-	-
	NOISE INDOOR (H/M/L)	dB-A		33/29/25			-		/	/
		Power Level dB		55/51/47			-			
	NOISE OUTDOOR (H/L)	dB-A		-			53/-		/	/
		Power Level dB		-			70/-			
EXTRA LOW TEMP	Total CAPACITY(kW)/INPUT POWER(W)/COP					-				
MAX CURRENT(A)/MAX INPUT POWER(W)			0.86×4/105×4	0.82×4/105×4	0.79×4/105×4	28.0/6.000k	28.0/6.200k	28.0/6.400k	/	
STARTING CURRENT(A)/COMP OUTPUT(W)			-	-	-	16.6/3.0k	15.9/3.0k	15.3/3.0k	/	
NETWORK IMPEDANCE (ΩMAX.)				-			-			
FM OUTPUT (W)				120			90x2		/	
MOISTURE REMOVAL VOLUME		L/h(Pt/h)	7.9	(1.98×4)	(16.6)		-			
External static pressure		Pa		70 (MIN10 - MAX150)						
I/D AIR FLOW	COOL	m^3/min (ft^3/min)		[14/13/10 (494/459/353)]×4						
	HEAT	m^3/min (ft^3/min)		[14/13/10 (494/459/353)]×4						
O/D AIR FLOW	COOL	m^3/min (ft^3/min)					130	(4591)		
	HEAT	m^3/min (ft^3/min)					110	(3885)		
REFRIGERANT TYPE, AMOUNT g(oz)						R410A	3.40k	(119.9)	/	
PROD IM	HEIGHT : H mm(inch)			290 (11-13/32)			1416 (55-3/4)		/	
	WIDTH : W mm(inch)			800 (31-1/2)			940 (37-1/32)		/	
	DEPTH : D mm(inch)			700 (27-9/16)			340 (13-13/32)		/	
PAC D IM	HEIGHT : H mm			355			1556		/	
	WIDTH : W mm			1014			1055		/	
	DEPTH : D mm			850			485		/	
MASS	(NET) kg(lb)			28 (62)			98 (216)		/	
	(GROSS) kg(lb)			35 (78)			108 (238)		/	
LAYERS LIMIT (actually)				9 (10)			1 (2)			
Operation Condition		Cool O.D(DBT)		18°C ~ 32°C			-15°C ~ 46°C			
		Heat O.D(DBT)		16°C ~ 30°C			-20°C ~ 24°C			
PIPING	PIPE DIAMETER mm (inch)			(Liquid)ø6.35(1/4) (Gas)ø12.7(1/2)			(Liquid)ø9.52(3/8) (Gas)ø15.88(5/8)			
	CONNECT METHOD, STD LENGTH m (ft)			flared type, 5.0(16.4)			flared type, 5.0(16.4)			
	PIPE LENGTH RANGE m (ft)			5 ~ 75			(16.4 ~ 246.1)		~	~
	I/D&O/D HEIGHT DIFFERENCE m (ft)			15 (OD located lower) / 30 (OD located higher)			(49.2/98.4)			
	ADD GAS AMOUNT g/m (oz/ft)			50			(0.538)			
	PIPE LENGTH FOR ADDITIONAL GAS m (ft)			20			(65.6)			

*1: In case it is necessary to indicate the air □ow volume in (l/s), the value in (m^3/min.) shall be multiplied by 16.7 and rounded down the decimal point.
*2: If the EUROVENT Certi□ed models can be operated under the □extra-low□temperature condition, -7□C dry bulb and -8□C wet-bulb temperatures with rated voltage 230 V shall be used.
*3: Network Impedance shall be applicable for EUROPE and CHINA models.
*4: The annual consumption is calculated by multiplying the input power at 230 V (400 V) by an average of 500 hours per year in cooling mode.
*5: EER and COP classification is at 230 V (400 V) only in accordance with EU directive 2002/31/EC.
*6: SEER and SCOP classification is at 230V(400V) only in accordance with EN-14825. For heating, SCOP indicates the value of only Average heating season, Other fiche data indicates in an attached sheet.

Simultaneous (Triple) -Type

1-1. Unit Specifications

PE1

4. Low Silhouette Ducted Type S-45PF1E5A×3 / U-125PE1E5A

INDOOR		MODEL	S-45PF1E5A×3							
OUTDOOR		MODEL				U-125PE1E5A				
Branch pipe		MODEL	CZ-P3HPC2							
PERFORMANCE TEST CONDITION			ISO13253 / EN14511 / EN12102							
POWER SUPPLY		ø, Hz	1ø 50Hz			1ø 50Hz				
		V	220	230	240	220	230	240	Min	Max
COOLING	CAPACITY	kW	12.5	12.5	12.5				3.3	14.0
		BTU/h	42700	42700	42700				11300	47800
	CURRENT	A	0.60×3	0.57×3	0.56×3	16.6	15.9	15.4	-	-
	INPUT POWER	W	70×3	70×3	70×3	3.360k	3.360k	3.360k	-	-
		TOTAL W		-		3.570k	3.570k	3.570k	840	4.600k
	ANNUAL CONSUMPTION	TOTAL kWh ※4		-		-	1785	-	-	-
	EER/EER CLASS	TOTAL(W/W)※5/("A"~"G")	-	-	-	3.50	3.50 / A	3.50	3.93	3.04
	Erp ※6 Pdsign	kW	-	-	-	-	-	-		
	Erp ※6 SEER	(W/W)	-	-	-	-	-	-		
	Erp ※6 Annual consumption	kWh	-	-	-	-	-	-		
	Erp ※6 Class		-	-	-	-	-	-		
	POWER FACTOR	%	-	-	-	92	92	91	-	-
	NOISE INDOOR (H/M/L)	dB-A		34/30/26						
		Power Level dB		56/52/48						
	NOISE OUTDOOR (H/L)	dB-A					53/-			
		Power Level dB					70/-			
HEATING	CAPACITY	kW	14.0	14.0	14.0				4.1	16.0
		BTU/h	47800	47800	47800				14000	54600
	CURRENT	A	0.60×3	0.57×3	0.56×3	16.3	15.8	15.1	-	-
	INPUT POWER	W	70×3	70×3	70×3	3.270k	3.270k	3.270k	-	-
		TOTAL W		-		3.480k	3.480k	3.480k	900	5.200k
	COP/COP CLASS	TOTAL(W/W)※5/("A"~"G")	-	-	-	4.02	4.02 / A	4.02	4.56	3.08
	Erp ※6 Pdsign	kW	-	-	-	-	-	-		
	Erp ※6 Tbivalen	°C	-	-	-	-	-	-		
	Erp ※6 SCOP	(W/W)	-	-	-	-	-	-		
	Erp ※6 Annual consumption	kWh	-	-	-	-	-	-		
	Erp ※6 Class		-	-	-	-	-	-		
	POWER FACTOR	%	-	-	-	91	90	90	-	-
	NOISE INDOOR (H/M/L)	dB-A		34/30/26			-		/	/
		Power Level dB		56/52/48			-			
	NOISE OUTDOOR (H/L)	dB-A		-			53/-		/	/
		Power Level dB		-			70/-			
EXTRA LOW TEMP	Total CAPACITY(kW)/INPUT POWER(W)/COP					-				
MAX CURRENT(A)/MAX INPUT POWER(W)			0.86×3/105×3	0.82×3/105×3	0.79×3/105×3	28.0/6.000k	28.0/6.200k	28.0/6.400k	/	
STARTING CURRENT(A)/COMP OUTPUT(W)			-	-	-	16.6/3.0k	15.9/3.0k	15.3/3.0k	/	
NETWORK IMPEDANCE (ΩMAX.)				-			-			
FM OUTPUT (W)				120			90x2		/	
MOISTURE REMOVAL VOLUME		L/h(Pt/h)	7.9	(2.63×3)	(16.6)		-			
External static pressure		Pa	70 (MIN10 - MAX150)							
I/D AIR FLOW	COOL	m^3/min (ft^3/min)	[14/13/10 (494/459/353)]×3							
	HEAT	m^3/min (ft^3/min)	[14/13/10 (494/459/353)]×3							
O/D AIR FLOW	COOL	m^3/min (ft^3/min)				130		(4591)		
	HEAT	m^3/min (ft^3/min)				110		(3885)		
REFRIGERANT TYPE, AMOUNT g(oz)						R410A	3.40k	(119.9)	/	
PROD IM	HEIGHT : H mm(inch)		290 (11-13/32)			1416 (55-3/4)			/	
	WIDTH : W mm(inch)		800 (31-1/2)			940 (37-1/32)			/	
	DEPTH : D mm(inch)		700 (27-9/16)			340 (13-13/32)			/	
PACK IM	HEIGHT : H mm		355			1556			/	
	WIDTH : W mm		1014			1055			/	
	DEPTH : D mm		850			485			/	
MASS	(NET) kg(lb)		28 (62)			98 (216)			/	
	(GROSS) kg(lb)		35 (78)			108 (238)			/	
LAYERS LIMIT (actually)			9 (10)			1 (2)				
Operation Condition		Cool O.D(DBT)	18°C ~ 32°C			-15°C ~ 46°C				
		Heat O.D(DBT)	16°C ~ 30°C			-20°C ~ 24°C				
PIPING	PIPE DIAMETER mm (inch)		(Liquid)ø6.35(1/4) (Gas)ø12.7(1/2)			(Liquid)ø9.52(3/8) (Gas)ø15.88(5/8)				
	CONNECT METHOD, STD LENGTH m (ft)		flared type, 5.0(16.4)			flared type, 5.0(16.4)				
	PIPE LENGTH RANGE m (ft)		5 ~ 75 (16.4 ~ 246.1)						~	~
	I/D&O/D HEIGHT DIFFERENCE m (ft)		15 (OD located lower) / 30 (OD located higher) (49.2/98.4)							
	ADD GAS AMOUNT g/m (oz/ft)		50 (0.538)							
	PIPE LENGTH FOR ADDITIONAL GAS m (ft)		20 (65.6)							

*1: In case it is necessary to indicate the air flow volume in (l/s), the value in (m^3/min.) shall be multiplied by 16.7 and rounded down the decimal point.
*2: If the EUROVENT Certified models can be operated under the extra-low temperature condition, -7°C dry bulb and -8°C wet-bulb temperatures with rated voltage 230 V shall be used.
*3: Network Impedance shall be applicable for EUROPE and CHINA models.
*4: The annual consumption is calculated by multiplying the input power at 230 V (400 V) by an average of 500 hours per year in cooling mode.
*5: EER and COP classification is at 230 V (400 V) only in accordance with EU directive 2002/31/EC.
*6: SEER and SCOP classification is at 230V(400V) only in accordance with EN-14825. For heating, SCOP indicates the value of only Average heating season, Other fiche data indicates in an attached sheet.

Single-Type

1-1. Unit Speci□cations

PE1

4. Low Silhouette Ducted Type S-50PF1E5A / U-50PE1E5

INDOOR		MODEL	S-50PF1E5A							
PANEL		MODEL	-			-				
OUTDOOR		MODEL				U-50PE1E5				
Branch pipe		MODEL	-							
PERFORMANCE TEST CONDITION			ISO13253 / EN14511 / EN14825 / EN12102							
POWER SUPPLY		□, Hz	1□50Hz			1□50Hz				
		V	220	230	240	220	230	240	Min	Max
COOLING	CAPACITY	kW	5.0	5.0	5.0				1.5	5.6
		BTU/h	17100	17100	17100				5100	19100
	CURRENT	A	0.77	0.74	0.71	6.10	5.85	5.60	-	-
	INPUT POWER	W	100	100	100	1.250k	1.250k	1.250k	-	-
		TOTAL W	-			1.350k	1.350k	1.350k	260	2.000k
	ANNUAL CONSUMPTION	TOTAL kWh ※4	-			675	675	675	-	-
	EER/EER CLASS	TOTAL(W/W)※5/("A"□"G")	-	-	-	3.70	3.70 / A	3.70	5.77	2.80
	Erp ※6 Pdsign	kW	-	-	-	-	5.0	-		
	Erp ※6 SEER	(W/W)	-	-	-	-	5.7	-		
	Erp ※6 Annual consumption	kWh	-	-	-	-	307	-		
	Erp ※6 Class		-	-	-	-	A+	-		
	POWER FACTOR	□	-	-	-	93	93	93	-	-
	NOISE INDOOR	dB-A (H/M/L)	34/30/26							
		Power Level dB	56/52/48							
	NOISE OUTDOOR	dB-A (H/L)				46/-				
		Power Level dB				65/-				
HEATING	CAPACITY	kW	5.6	5.6	5.6				1.5	6.5
		BTU/h	19100	19100	19100				5100	22200
	CURRENT	A	0.77	0.74	0.71	6.85	6.55	6.25	-	-
	INPUT POWER	W	100	100	100	1.400k	1.4000k	1.400k	-	-
		TOTAL W	-			1.500k	1.500k	1.500k	220	2.400k
	COP/COP CLASS	TOTAL(W/W)※5/("A"□"G")	-	-	-	3.73	3.73 / A	3.73	6.82	2.71
	Erp ※6 Pdsign	kW	-	-	-	-	4.0	-		
	Erp ※6 Tbivalen	°C	-	-	-	-	-10	-		
	Erp ※6 SCOP	(W/W)	-	-	-	-	3.8	-		
	Erp ※6 Annual consumption	kWh	-	-	-	-	1474	-		
	Erp ※6 Class		-	-	-	-	A	-		
	POWER FACTOR	□	-	-	-	93	93	93	-	-
	NOISE INDOOR	dB-A (H/M/L)	34/30/26			-			/	/
		Power Level dB	56/52/48			-				
	NOISE OUTDOOR	dB-A (H/L)	-			50/-			/	/
		Power Level dB	-			69/-				
EXTRALOW TEMP	Total CAPACITY(kW)/INPUT POWER(W)/COP		-							
MAX CURRENT(A)/MAX INPUT POWER(W)			1.00/125	0.96/125	0.92/125	12/2.46k	12/2.57k	12/2.68k	/	
STARTING CURRENT(A)/COMP OUTPUT(W)			-	-	-	6.85/1.4k	6.55/1.4k	6.25/1.4k	/	
NETWORK IMPEDANCE (ΩMAX.)			-			-				
FM OUTPUT (W)			120			90			/	
MOISTURE REMOVAL VOLUME		L/h(Pt/h)	2.8		(5.9)	-				
External static pressure		Pa	70 (MIN10 - MAX150)							
I/D AIR FLOW	COOL	m^3/min (ft^3/min)	16/15/12 (565/530/424)							
	HEAT	m^3/min (ft^3/min)	16/15/12 (565/530/424)							
O/D AIR FLOW	COOL	m^3/min (ft^3/min)				30		(1067)		
	HEAT	m^3/min (ft^3/min)				35		(1225)		
REFRIGERANT TYPE, AMOUNT g(oz)						R410A	1.65k	(58.2)	/	
PROD	HEIGHT : H mm(inch)		290 (11-13/32)			569 (22-13/32)			/	
	WIDTH : W mm(inch)		800 (31-1/2)			790 (31-7/64)			/	
	DEPTH : D mm(inch)		700 (27-9/16)			285 (11-7/32)			/	
PACK	HEIGHT : H mm		355			645			/	
	WIDTH : W mm		1014			921			/	
	DEPTH : D mm		850			386			/	
MASS	(NET) kg(lb)		28 (62)			42 (93)			/	
	(GROSS) kg(lb)		35 (78)			46 (101)			/	
LAYERS LIMIT (actually)			9 (10)			4 (5)				
Operation Condition		Cool (DBT)	18°C □32°C			-15°C □46°C				
		Heat (DBT)	16°C □30°C			-20°C □24°C				
PIPING	PIPE DIAMETER mm (inch)		(Liquid)□6.35(1/4) (Gas)□12.7(1/2)			(Liquid)□6.35(1/4) (Gas)□12.7(1/2)				
	CONNECT METHOD, STD LENGTH m (ft)		”ared type, 5.0(16.4)			”ared type, 5.0(16.4)				
	PIPE LENGTH RANGE m (ft)		5□40 (16.4□131.2)						□	□
	I/D&O/D HEIGHT DIFFERENCE m (ft)		15 (OD located lower) / 30 (OD located higher) (49.2/98.4)							
	ADD GAS AMOUNT g/m (oz/ft)		20 (0.215)							
	PIPE LENGTH FOR ADDITIONAL GAS m (ft)		30 (98.4)							

*1: In case it is necessary to indicate the air ”ow volume in (l/s), the value in (m^3/min.) shall be multiplied by 16.7 and rounded down the decimal point.
*2: If the EUROVENT Certi“ed models can be operated under the •extra-low□temperature condition, -7°C dry bulb and -8°C wet-bulb temperatures with rated voltage 230 V shall be used.
*3: Network Impedance shall be applicable for EUROPE and CHINA models.
*4: The annual consumption is calculated by multiplying the input power at 230 V (400 V) by an average of 500 hours per year in cooling mode.
*5: EER and COP classification is at 230 V (400 V) only in accordance with EU directive 2002/31/EC.
*6: SEER and SCOP classification is at 230V(400V) only in accordance with EN-14825. For heating, SCOP indicates the value of only Average heating season, Other fiche data indicates in an attached sheet.

Simultaneous (Twin) -Type

1-1. Unit Speci□cations

PE1

4. Low Silhouette Ducted Type S-50PF1E5A×2 / U-100PE1E5A

INDOOR		MODEL	S-50PF1E5A×2							
OUTDOOR		MODEL				U-100PE1E5A				
Branch pipe		MODEL	CZ-P155BK1							
PERFORMANCE TEST CONDITION			ISO13253 / EN14511 / EN14825 / EN12102							
POWER SUPPLY		ø, Hz	1ø 50Hz			1ø 50Hz				
		V	220	230	240	220	230	240	Min	Max
COOLING	CAPACITY	kW	10.0	10.0	10.0				3.3	12.5
		BTU/h	34100	34100	34100				11300	42700
	CURRENT	A	0.77×2	0.74×2	0.71×2	11.0	10.6	10.3	-	-
	INPUT POWER	W	100×2	100×2	100×2	2.245k	2.245k	2.245k	-	-
		TOTAL W		-		2.445k	2.445k	2.445k	840	3.700k
	ANNUAL CONSUMPTION	TOTAL kWh ※4		-		-	1222.5	-	-	-
	EER/EER CLASS	TOTAL(W/W)※5("A"~"G")	-	-	-	4.09	4.09 / A	4.09	3.93	3.38
	Erp ※6 Pdsign	kW	-	-	-	-	10.0	-		
	Erp ※6 SEER	(W/W)	-	-	-	-	5.8	-		
	Erp ※6 Annual consumption	kWh	-	-	-	-	603	-		
	Erp ※6 Class		-	-	-	-	A+	-		
	POWER FACTOR	%	-	-	-	93	92	91	-	-
	NOISE INDOOR (H/M/L)	dB-A		34/30/26						
		Power Level dB		56/52/48						
	NOISE OUTDOOR (H/L)	dB-A					52/-			
		Power Level dB					69/-			
HEATING	CAPACITY	kW	11.2	11.2	11.2				4.1	14.0
		BTU/h	38200	38200	38200				14000	47800
	CURRENT	A	0.77×2	0.74×2	0.71×2	11.6	11.2	10.7	-	-
	INPUT POWER	W	100×2	100×2	100×2	2.400k	2.400k	2.400k	-	-
		TOTAL W		-		2.600k	2.600k	2.600k	900	4.400k
	COP/COP CLASS	TOTAL(W/W)※5("A"~"G")	-	-	-	4.31	4.31 / A	4.31	4.56	3.18
	Erp ※6 Pdsign	kW	-	-	-	-	10.0	-		
	Erp ※6 Tbivalen	°C	-	-	-	-	-10	-		
	Erp ※6 SCOP	(W/W)	-	-	-	-	3.8	-		
	Erp ※6 Annual consumption	kWh	-	-	-	-	3684	-		
	Erp ※6 Class		-	-	-	-	A	-		
	POWER FACTOR	%	-	-	-	94	94	93	-	-
	NOISE INDOOR (H/M/L)	dB-A		34/30/26			-		/	/
		Power Level dB		56/52/48			-			
	NOISE OUTDOOR (H/L)	dB-A		-			52/-		/	/
		Power Level dB		-			69/-			
EXTRA LOW TEMP	Total CAPACITY(kW)/INPUT POWER(W)/COP					-				
MAX CURRENT(A)/MAX INPUT POWER(W)			1.00×2/125×2	0.96×2/125×2	0.92×2/125×2	25.0/5.350k	25.0/5.550k	25.0/5.750k	/	
STARTING CURRENT(A)/COMP OUTPUT(W)			-	-	-	11.6/3.0k	11.2/3.0k	10.7/3.0k	/	
NETWORK IMPEDANCE (ΩMAX.)				-			-			
FM OUTPUT (W)				120			90x2		/	
MOISTURE REMOVAL VOLUME		L/h(Pt/h)	6.0	(3.0×2)	(12.6)		-			
External static pressure		Pa		70 (MIN10 - MAX150)						
I/D AIR FLOW	COOL	m^3/min (ft^3/min)		[16/15/12 (565/530/424)]×2						
	HEAT	m^3/min (ft^3/min)		[16/15/12 (565/530/424)]×2						
O/D AIR FLOW	COOL	m^3/min (ft^3/min)				110		(3885)		
	HEAT	m^3/min (ft^3/min)				95		(3355)		
REFRIGERANT TYPE, AMOUNT g(oz)						R410A	3.40k	(119.9)	/	
PROD DIM	HEIGHT : H mm(inch)			290 (11-13/32)			1416 (55-3/4)		/	
	WIDTH : W mm(inch)			800 (31-1/2)			940 (37-1/32)		/	
	DEPTH : D mm(inch)			700 (27-9/16)			340 (13-13/32)		/	
PAC DIM	HEIGHT : H mm			355			1556		/	
	WIDTH : W mm			1014			1055		/	
	DEPTH : D mm			850			485		/	
MASS	(NET) kg(lb)			28 (62)			98 (216)		/	
	(GROSS) kg(lb)			35 (78)			108 (238)		/	
LAYERS LIMIT (actually)				9 (10)			1 (2)			
Operation Condition		Cool O.D(DBT)		18°C ~ 32°C			-15°C ~ 46°C			
		Heat O.D(DBT)		16°C ~ 30°C			-20°C ~ 24°C			
PIPING	PIPE DIAMETER mm (inch)		(Liquid)ø6.35(1/4) (Gas)ø12.7(1/2)			(Liquid)ø9.52(3/8) (Gas)ø15.88(5/8)				
	CONNECT METHOD, STD LENGTH m (ft)		flared type, 5.0(16.4)			flared type, 5.0(16.4)				
	PIPE LENGTH RANGE m (ft)			5 ~ 75 (16.4 ~ 246.1)					~	~
	I/D&O/D HEIGHT DIFFERENCE m (ft)		15 (OD located lower) / 30 (OD located higher) (49.2/98.4)							
	ADD GAS AMOUNT g/m (oz/ft)			50 (0.538)						
	PIPE LENGTH FOR ADDITIONAL GAS m (ft)			30 (98.4)						

*1: In case it is necessary to indicate the air □ow volume in (l/s), the value in (m^3/min.) shall be multiplied by 16.7 and rounded down the decimal point.
*2: If the EUROVENT Certi□ed models can be operated under the □extra-low□temperature condition, -7□C dry bulb and -8□C wet-bulb temperatures with rated voltage 230 V shall be used.
*3: Network Impedance shall be applicable for EUROPE and CHINA models.
*4: The annual consumption is calculated by multiplying the input power at 230 V (400 V) by an average of 500 hours per year in cooling mode.
*5: EER and COP classification is at 230 V (400 V) only in accordance with EU directive 2002/31/EC.
*6: SEER and SCOP classification is at 230V(400V) only in accordance with EN-14825. For heating, SCOP indicates the value of only Average heating season, Other fiche data indicates in an attached sheet.

Simultaneous (Triple) -Type

1-1. Unit Speci□cations

PE1

4. Low Silhouette Ducted Type S-50PF1E5A×3 / U-140PE1E5A

INDOOR		MODEL	S-50PF1E5A×3							
OUTDOOR		MODEL				U-140PE1E5A				
Branch pipe		MODEL	CZ-P3HPC2							
PERFORMANCE TEST CONDITION			ISO13253 / EN14511 / EN12102							
POWER SUPPLY		ø, Hz	1ø 50Hz			1ø 50Hz				
		V	220	230	240	220	230	240	Min	Max
COOLING	CAPACITY	kW	14.0	14.0	14.0				3.3	15.5
		BTU/h	47800	47800	47800				11300	52900
	CURRENT	A	0.77×3	0.74×3	0.71×3	20.1	19.3	18.6	-	-
	INPUT POWER	W	100×3	100×3	100×3	4.085k	4.085k	4.085k	-	-
		TOTAL W		-		4.385k	4.385k	4.385k	840	6.000k
	ANNUAL CONSUMPTION	TOTAL kWh ※4		-		-	2192.5	-	-	-
	EER/EER CLASS	TOTAL(W/W)※5/("A"~"G")	-	-	-	3.19	3.19 / A	3.19	3.93	2.58
	Erp ※6 Pdsign	kW	-	-	-	-	-	-		
	Erp ※6 SEER	(W/W)	-	-	-	-	-	-		
	Erp ※6 Annual consumption	kWh	-	-	-	-	-	-		
	Erp ※6 Class		-	-	-	-	-	-		
	POWER FACTOR	%	-	-	-	93	92	92	-	-
	NOISE INDOOR (H/M/L)	dB-A		34/30/26						
		Power Level dB		56/52/48						
	NOISE OUTDOOR (H/L)	dB-A					54/-			
		Power Level dB					71/-			
HEATING	CAPACITY	kW	16.0	16.0	16.0				4.1	18.0
		BTU/h	54600	54600	54600				14000	61400
	CURRENT	A	0.77×3	0.74×3	0.71×3	19.9	19.1	18.4	-	-
	INPUT POWER	W	100×3	100×3	100×3	4.215k	4.215k	4.215k	-	-
		TOTAL W		-		4.515k	4.515k	4.515k	900	5.900k
	COP/COP CLASS	TOTAL(W/W)※5/("A"~"G")	-	-	-	3.54	3.54 / A	3.54	4.56	3.05
	Erp ※6 Pdsign	kW	-	-	-	-	-	-		
	Erp ※6 Tbivalen	°C	-	-	-	-	-	-		
	Erp ※6 SCOP	(W/W)	-	-	-	-	-	-		
	Erp ※6 Annual consumption	kWh	-	-	-	-	-	-		
	Erp ※6 Class		-	-	-	-	-	-		
	POWER FACTOR	%	-	-	-	96	96	95	-	-
	NOISE INDOOR (H/M/L)	dB-A		34/30/26			-		/	/
		Power Level dB		56/52/48			-			
	NOISE OUTDOOR (H/L)	dB-A		-			55/-		/	/
		Power Level dB		-			71/-			
EXTRA LOW TEMP	Total CAPACITY(kW)/INPUT POWER(W)/COP		-							
MAX CURRENT(A)/MAX INPUT POWER(W)			1.00×3/125×3	0.96×3/125×3	0.92×3/125×3	30.0/6.450k	30.0/6.650k	30.0/6.850k	/	
STARTING CURRENT(A)/COMP OUTPUT(W)			-	-	-	20.1/3.0k	19.3/3.0k	18.6/3.0k	/	
NETWORK IMPEDANCE (ΩMAX.)				-			-			
FM OUTPUT (W)				120			90x2		/	
MOISTURE REMOVAL VOLUME		L/h(Pt/h)	9.0	(3.0×3)	(18.9)		-			
External static pressure		Pa	70 (MIN10 - MAX150)							
I/D AIR FLOW	COOL	m^3/min (ft^3/min)	[16/15/12 (565/530/424)]×3							
	HEAT	m^3/min (ft^3/min)	[16/15/12 (565/530/424)]×3							
O/D AIR FLOW	COOL	m^3/min (ft^3/min)				135		(4767)		
	HEAT	m^3/min (ft^3/min)				120		(4238)		
REFRIGERANT TYPE, AMOUNT g(oz)						R410A	3.40k	(119.9)	/	
PROD DIM	HEIGHT : H mm(inch)		290 (11-13/32)			1416 (55-3/4)			/	
	WIDTH : W mm(inch)		800 (31-1/2)			940 (37-1/32)			/	
	DEPTH : D mm(inch)		700 (27-9/16)			340 (13-13/32)			/	
PACK DIM	HEIGHT : H mm		355			1556			/	
	WIDTH : W mm		1014			1055			/	
	DEPTH : D mm		850			485			/	
MASS	(NET) kg(lb)		28 (62)			98 (216)			/	
	(GROSS) kg(lb)		35 (78)			108 (238)			/	
LAYERS LIMIT (actually)			9 (10)			1 (2)				
Operation Condition		Cool O.D(DBT)	18°C ~ 32°C			-15°C ~ 46°C				
		Heat O.D(DBT)	16°C ~ 30°C			-20°C ~ 24°C				
PIPING	PIPE DIAMETER mm (inch)		(Liquid)ø6.35(1/4) (Gas)ø12.7(1/2)			(Liquid)ø9.52(3/8) (Gas)ø15.88(5/8)				
	CONNECT METHOD, STD LENGTH m (ft)		flared type, 5.0(16.4)			flared type, 5.0(16.4)				
	PIPE LENGTH RANGE m (ft)		5 ~ 75 (16.4 ~ 246.1)						~	~
	I/D&O/D HEIGHT DIFFERENCE m (ft)		15 (OD located lower) / 30 (OD located higher) (49.2/98.4)							
	ADD GAS AMOUNT g/m (oz/ft)		50 (0.538)							
	PIPE LENGTH FOR ADDITIONAL GAS m (ft)		20 (65.6)							

*1: In case it is necessary to indicate the air □ow volume in (l/s), the value in (m^3/min.) shall be multiplied by 16.7 and rounded down the decimal point.
*2: If the EUROVENT Certi□ed models can be operated under the □extra-low□temperature condition, -7□C dry bulb and -8□C wet-bulb temperatures with rated voltage 230 V shall be used.
*3: Network Impedance shall be applicable for EUROPE and CHINA models.
*4: The annual consumption is calculated by multiplying the input power at 230 V (400 V) by an average of 500 hours per year in cooling mode.
*5: EER and COP classification is at 230 V (400 V) only in accordance with EU directive 2002/31/EC.
*6: SEER and SCOP classification is at 230V(400V) only in accordance with EN-14825. For heating, SCOP indicates the value of only Average heating season, Other fiche data indicates in an attached sheet.

Single -Type

1-1. Unit Speci□cations

PE1

4. Low Silhouette Ducted Type S-60PF1E5A / U-60PE1E5A

INDOOR		MODEL	S-60PF1E5A							
OUTDOOR		MODEL				U-60PE1E5A				
Branch pipe		MODEL				-				
PERFORMANCE TEST CONDITION			ISO13253 / EN14511 / EN14825 / EN12102							
POWER SUPPLY		ø, Hz	1ø 50Hz			1ø 50Hz				
		V	220	230	240	220	230	240	Min	Max
COOLING	CAPACITY	kW	6.00	6.00	6.00				2.5	7.1
		BTU/h	20500	20500	20500				8500	24200
	CURRENT	A	0.91	0.89	0.87	7.70	7.40	7.10	-	-
	INPUT POWER	W	120	120	120	1.420k	1.420k	1.420k	-	-
		TOTAL W		-		1.540k	1.540k	1.540k	530	2.000k
	ANNUAL CONSUMPTION	TOTAL kWh ※4		-		-	770	-	-	-
	EER/EER CLASS	TOTAL(W/W)※5("A"~"G")	-	-	-	3.90 / A	3.90 / A	3.90 / A	4.72	3.55
	Erp ※6 Pdsign	kW	-	-	-	-	6.0	-		
	Erp ※6 SEER	(W/W)	-	-	-	-	6.4	-		
	Erp ※6 Annual consumption	kWh	-	-	-	-	328	-		
	Erp ※6 Class		-	-	-	-	A++	-		
	POWER FACTOR	%	-	-	-	91	90	90	-	-
	NOISE INDOOR (H/M/L)	dB-A		35/32/26			-			
		Power Level dB		57/54/48			-			
	NOISE OUTDOOR (H/L)	dB-A					48			
		Power Level dB					65			
HEATING	CAPACITY	kW	7.00	7.00	7.00				2.0	8.0
		BTU/h	23900	23900	23900				6800	27300
	CURRENT	A	0.91	0.89	0.87	8.70	8.40	8.10	-	-
	INPUT POWER	W	120	120	120	1.690k	1.690k	1.690k	-	-
		TOTAL W		-		1.810k	1.810k	1.810k	480	2.480k
	COP/COP CLASS	TOTAL(W/W)※5("A"~"G")	-	-	-	3.87 / A	3.87 / A	3.87 / A	4.17	3.23
	Erp ※6 Pdsign	kW	-	-	-	-	6.0	-		
	Erp ※6 Tbivalen	°C	-	-	-	-	-10	-		
	Erp ※6 SCOP	(W/W)	-	-	-	-	3.9	-		
	Erp ※6 Annual consumption	kWh	-	-	-	-	2154	-		
	Erp ※6 Class		-	-	-	-	A	-		
	POWER FACTOR	%	-	-	-	95	94	93	-	-
	NOISE INDOOR (H/M/L)	dB-A		35/32/26			-		/	/
		Power Level dB		57/54/48			-			
	NOISE OUTDOOR (H/L)	dB-A		-			50		/	/
		Power Level dB		-			67			
EXTRA LOW TEMP	Total CAPACITY(kW)/INPUT POWER(W)/COP					-				
MAX CURRENT(A)/MAX INPUT POWER(W)			1.26/160	1.20/160	1.15/160	18.0/3.800k	18.0/3.930k	18.0/4.060k	/	
STARTING CURRENT(A)/COMP OUTPUT(W)			-	-	-	8.70/1.700k	8.40/1.700k	8.10/1.700k	/	
NETWORK IMPEDANCE (ΩMAX.)				-			-			
FM OUTPUT (W)				120			90		/	
MOISTURE REMOVAL VOLUME		L/h(Pt/h)	3.4		(7.1)		-			
External static pressure		Pa	70 (MIN10 - MAX150)							
I/D AIR FLOW	COOL	m^3/min (ft^3/min)	21/19/15 (742/671/530)							
	HEAT	m^3/min (ft^3/min)	21/19/15 (742/671/530)							
O/D AIR FLOW	COOL	m^3/min (ft^3/min)				60		(2119)		
	HEAT	m^3/min (ft^3/min)				60		(2119)		
REFRIGERANT TYPE, AMOUNT g(oz)						R410A	2.00k	(70.5)	/	
PROD	HEIGHT : H mm(inch)		290 (11-13/32)			996 (39-7/32)			/	
	WIDTH : W mm(inch)		1000 (39-3/8)			940 (37-1/32)			/	
	DEPTH : D mm(inch)		700 (27-9/16)			340 (13-13/32)			/	
PACK	HEIGHT : H mm		355			1136			/	
	WIDTH : W mm		1214			1055			/	
	DEPTH : D mm		850			485			/	
MASS	(NET) kg(lb)		33 (73)			68 (150)			/	
	(GROSS) kg(lb)		41 (91)			76 (168)			/	
LAYERS LIMIT (actually)			9 (10)			2 (3)				
Operation Condition		Cool O.D(DBT)	18°C ~ 32°C			-15°C ~ 46°C				
		Heat O.D(DBT)	16°C ~ 30°C			-20°C ~ 24°C				
PIPING	PIPE DIAMETER mm (inch)		(Liquid)ø9.52(3/8) (Gas)ø15.88(5/8)			(Liquid)ø9.52(3/8) (Gas)ø15.88(5/8)				
	CONNECT METHOD, STD LENGTH m (ft)		flared type, 5.0(16.4)			flared type, 5.0(16.4)				
	PIPE LENGTH RANGE m (ft)		5 ~ 50 (16.4 ~ 164.0)						~	~
	I/D&O/D HEIGHT DIFFERENCE m (ft)		15 (OD located lower) / 30 (OD located higher) (49.2/98.4)							
	ADD GAS AMOUNT g/m (oz/ft)		50 (0.538)							
	PIPE LENGTH FOR ADDITIONAL GAS m (ft)		30 (98.4)							

*1: In case it is necessary to indicate the air □ow volume in (l/s), the value in (m^3/min.) shall be multiplied by 16.7 and rounded down the decimal point.
*2: If the EUROVENT Certi□ed models can be operated under the □extra-low□temperature condition, -7□C dry bulb and -8□C wet-bulb temperatures with rated voltage 230 V shall be used.
*3: Network Impedance shall be applicable for EUROPE and CHINA models.
*4: The annual consumption is calculated by multiplying the input power at 230 V (400 V) by an average of 500 hours per year in cooling mode.
*5: EER and COP classification is at 230 V (400 V) only in accordance with EU directive 2002/31/EC.
*6: SEER and SCOP classification is at 230V(400V) only in accordance with EN-14825. For heating, SCOP indicates the value of only Average heating season, Other fiche data indicates in an attached sheet.

Simultaneous (Twin) -Type

1-1. Unit Speci□cations

PE1

4. Low Silhouette Ducted Type S-60PF1E5A×2 / U-125PE1E5A

INDOOR		MODEL	S-60PF1E5A×2							
OUTDOOR		MODEL				U-125PE1E5A				
Branch pipe		MODEL	CZ-P155BK1							
PERFORMANCE TEST CONDITION			ISO13253 / EN14511 / EN12102							
POWER SUPPLY		ø, Hz	1ø 50Hz			1ø 50Hz				
		V	220	230	240	220	230	240	Min	Max
COOLING	CAPACITY	kW	12.5	12.5	12.5				3.3	14.0
		BTU/h	42700	42700	42700				11300	47800
	CURRENT	A	0.91×2	0.89×2	0.87×2	16.6	15.9	15.3	-	-
	INPUT POWER	W	120×2	120×2	120×2	3.355k	3.355k	3.355k	-	-
		TOTAL W		-		3.595k	3.595k	3.595k	840	4.600k
	ANNUAL CONSUMPTION	TOTAL kWh ※4		-		-	1797.5	-	-	-
	EER/EER CLASS	TOTAL(W/W)※5/("A"~"G")	-	-	-	3.48	3.48 / A	3.48	3.93	3.04
	Erp ※6 Pdsign	kW	-	-	-	-	-	-		
	Erp ※6 SEER	(W/W)	-	-	-	-	-	-		
	Erp ※6 Annual consumption	kWh	-	-	-	-	-	-		
	Erp ※6 Class		-	-	-	-	-	-		
	POWER FACTOR	%	-	-	-	92	92	91	-	-
	NOISE INDOOR (H/M/L)	dB-A		35/32/26						
		Power Level dB		57/54/48						
	NOISE OUTDOOR (H/L)	dB-A					53/-			
		Power Level dB					70/-			
HEATING	CAPACITY	kW	14.0	14.0	14.0				4.1	16.0
		BTU/h	47800	47800	47800				14000	54600
	CURRENT	A	0.91×2	0.89×2	0.87×2	16.3	15.8	15.1	-	-
	INPUT POWER	W	120×2	120×2	120×2	3.270k	3.270k	3.270k	-	-
		TOTAL W		-		3.510k	3.510k	3.510k	900	5.200k
	COP/COP CLASS	TOTAL(W/W)※5/("A"~"G")	-	-	-	3.99	3.99 / A	3.99	4.56	3.08
	Erp ※6 Pdsign	kW	-	-	-	-	-	-		
	Erp ※6 Tbivalen	°C	-	-	-	-	-	-		
	Erp ※6 SCOP	(W/W)	-	-	-	-	-	-		
	Erp ※6 Annual consumption	kWh	-	-	-	-	-	-		
	Erp ※6 Class		-	-	-	-	-	-		
	POWER FACTOR	%	-	-	-	91	90	90	-	-
	NOISE INDOOR (H/M/L)	dB-A		35/32/26			-		/	/
		Power Level dB		57/54/48			-			
	NOISE OUTDOOR (H/L)	dB-A		-			53/-		/	/
		Power Level dB		-			70/-			
EXTRA LOW TEMP	Total CAPACITY(kW)/INPUT POWER(W)/COP		-							
MAX CURRENT(A)/MAX INPUT POWER(W)			1.26×2/160×2	1.20×2/160×2	1.15×2/160×2	28.0/6.000k	28.0/6.200k	28.0/6.400k	/	
STARTING CURRENT(A)/COMP OUTPUT(W)			-	-	-	16.6/3.0k	15.9/3.0k	15.3/3.0k	/	
NETWORK IMPEDANCE (ΩMAX.)				-			-			
FM OUTPUT (W)				120			90x2		/	
MOISTURE REMOVAL VOLUME		L/h(Pt/h)	7.9	(3.95×2)	(16.6)		-			
External static pressure		Pa	70 (MIN10 - MAX150)							
I/D AIR FLOW	COOL	m^3/min (ft^3/min)	[21/19/15 (742/671/530)]×2							
	HEAT	m^3/min (ft^3/min)	[21/19/15 (742/671/530)]×2							
O/D AIR FLOW	COOL	m^3/min (ft^3/min)				130		(4591)		
	HEAT	m^3/min (ft^3/min)				110		(3885)		
REFRIGERANT TYPE, AMOUNT g(oz)						R410A	3.40k	(119.9)	/	
PROD IM	HEIGHT : H mm(inch)		290 (11-13/32)			1416 (55-3/4)			/	
	WIDTH : W mm(inch)		1000 (39-3/8)			940 (37-1/32)			/	
	DEPTH : D mm(inch)		700 (27-9/16)			340 (13-13/32)			/	
PAC D IM	HEIGHT : H mm		355			1556			/	
	WIDTH : W mm		1214			1055			/	
	DEPTH : D mm		850			485			/	
MASS	(NET) kg(lb)		33 (73)			98 (216)			/	
	(GROSS) kg(lb)		41 (91)			108 (238)			/	
LAYERS LIMIT (actually)			9 (10)			1 (2)				
Operation Condition		Cool O.D(DBT)	18°C ~ 32°C			-15°C ~ 46°C				
		Heat O.D(DBT)	16°C ~ 30°C			-20°C ~ 24°C				
PIPING	PIPE DIAMETER mm (inch)		(Liquid)ø9.52(3/8) (Gas)ø15.88(5/8)			(Liquid)ø9.52(3/8) (Gas)ø15.88(5/8)				
	CONNECT METHOD, STD LENGTH m (ft)		flared type, 5.0(16.4)			flared type, 5.0(16.4)				
	PIPE LENGTH RANGE m (ft)		5 ~ 75 (16.4 ~ 246.1)						~	~
	I/D&O/D HEIGHT DIFFERENCE m (ft)		15 (OD located lower) / 30 (OD located higher) (49.2/98.4)							
	ADD GAS AMOUNT g/m (oz/ft)		50 (0.538)							
	PIPE LENGTH FOR ADDITIONAL GAS m (ft)		30 (98.4)							

*1: In case it is necessary to indicate the air □ow volume in (l/s), the value in (m^3/min.) shall be multiplied by 16.7 and rounded down the decimal point.
*2: If the EUROVENT Certi□ed models can be operated under the □extra-low□temperature condition, -7□C dry bulb and -8□C wet-bulb temperatures with rated voltage 230 V shall be used.
*3: Network Impedance shall be applicable for EUROPE and CHINA models.
*4: The annual consumption is calculated by multiplying the input power at 230 V (400 V) by an average of 500 hours per year in cooling mode.
*5: EER and COP classification is at 230 V (400 V) only in accordance with EU directive 2002/31/EC.
*6: SEER and SCOP classification is at 230V(400V) only in accordance with EN-14825. For heating, SCOP indicates the value of only Average heating season, Other fiche data indicates in an attached sheet.

Single -Type

1-1. Unit Specifications

PE1

4. Low Silhouette Ducted Type S-71PF1E5A / U-71PE1E5A

INDOOR		MODEL	S-71PF1E5A							
OUTDOOR		MODEL				U-71PE1E5A				
Branch pipe		MODEL	-							
PERFORMANCE TEST CONDITION			ISO13253 / EN14511 / EN14825 / EN12102							
POWER SUPPLY		ø, Hz	1ø 50Hz			1ø 50Hz				
		V	220	230	240	220	230	240	Min	Max
COOLING	CAPACITY	kW	7.10	7.10	7.10				2.5	8.0
		BTU/h	24200	24200	24200				8500	27300
	CURRENT	A	0.91	0.89	0.87	8.90	8.60	8.30	-	-
	INPUT POWER	W	120	120	120	1.730k	1.730k	1.730k	-	-
		TOTAL W		-		1.850k	1.850k	1.850k	530	2.650k
	ANNUAL CONSUMPTION	TOTAL kWh ※4		-		-	925	-	-	-
	EER/EER CLASS	TOTAL(W/W)※5("A"~"G")	-	-	-	3.84 / A	3.84 / A	3.84 / A	4.72	3.02
	Erp ※6 Pdsign	kW	-	-	-	-	7.1	-		
	Erp ※6 SEER	(W/W)	-	-	-	-	6.4	-		
	Erp ※6 Annual consumption	kWh	-	-	-	-	388	-		
	Erp ※6 Class		-	-	-	-	A++	-		
	POWER FACTOR	%	-	-	-	94	94	93	-	-
	NOISE INDOOR (H/M/L)	dB-A		35/32/26			-			
		Power Level dB		57/54/48			-			
	NOISE OUTDOOR (H/L)	dB-A					48			
		Power Level dB					65			
HEATING	CAPACITY	kW	8.00	8.00	8.00				2.0	9.0
		BTU/h	27300	27300	27300				6800	30700
	CURRENT	A	0.91	0.89	0.87	9.90	9.50	9.20	-	-
	INPUT POWER	W	120	120	120	1.960k	1.960k	1.960k	-	-
		TOTAL W		-		2.080k	2.080k	2.080k	480	2.900k
	COP/COP CLASS	TOTAL(W/W)※5("A"~"G")	-	-	-	3.85 / A	3.85 / A	3.85 / A	4.17	3.10
	Erp ※6 Pdsign	kW	-	-	-	-	7.1	-		
	Erp ※6 Tbivalen	°C	-	-	-	-	-9	-		
	Erp ※6 SCOP	(W/W)	-	-	-	-	4.0	-		
	Erp ※6 Annual consumption	kWh	-	-	-	-	2485	-		
	Erp ※6 Class		-	-	-	-	A+	-		
	POWER FACTOR	%	-	-	-	96	95	94	-	-
	NOISE INDOOR (H/M/L)	dB-A		35/32/26			-		/	/
		Power Level dB		57/54/48			-			
	NOISE OUTDOOR (H/L)	dB-A		-			50		/	/
		Power Level dB		-			67			
EXTRA LOW TEMP	Total CAPACITY(kW)/INPUT POWER(W)/COP		-							
MAX CURRENT(A)/MAX INPUT POWER(W)			1.26/160	1.20/160	1.15/160	18.0/3.800k	18.0/3.930k	18.0/4.060k	/	
STARTING CURRENT(A)/COMP OUTPUT(W)			-	-	-	9.90/2.000k	9.50/2.000k	9.20/2.000k	/	
NETWORK IMPEDANCE (ΩMAX.)				-			-			
FM OUTPUT (W)				120			90		/	
MOISTURE REMOVAL VOLUME		L/h(Pt/h)	4.2		(8.8)		-			
External static pressure		Pa	70 (MIN10 - MAX150)							
I/D AIR FLOW	COOL	m^3/min (ft^3/min)	21/19/15 (742/671/530)							
	HEAT	m^3/min (ft^3/min)	21/19/15 (742/671/530)							
O/D AIR FLOW	COOL	m^3/min (ft^3/min)				60		(2119)		
	HEAT	m^3/min (ft^3/min)				60		(2119)		
REFRIGERANT TYPE, AMOUNT g(oz)						R410A	2.35k	(82.9)	/	
PROD DIM	HEIGHT : H mm(inch)		290 (11-13/32)			996 (39-7/32)			/	
	WIDTH : W mm(inch)		1000 (39-3/8)			940 (37-1/32)			/	
	DEPTH : D mm(inch)		700 (27-9/16)			340 (13-13/32)			/	
PACK DIM	HEIGHT : H mm		355			1136			/	
	WIDTH : W mm		1214			1055			/	
	DEPTH : D mm		850			485			/	
MASS	(NET) kg(lb)		33 (73)			69 (152)			/	
	(GROSS) kg(lb)		41 (91)			77 (170)			/	
LAYERS LIMIT (actually)			9 (10)			2 (3)				
Operation Condition		Cool O.D(DBT)	18°C ~ 32°C			-15°C ~ 46°C				
		Heat O.D(DBT)	16°C ~ 30°C			-20°C ~ 24°C				
PIPING	PIPE DIAMETER mm (inch)		(Liquid)ø9.52(3/8) (Gas)ø15.88(5/8)			(Liquid)ø9.52(3/8) (Gas)ø15.88(5/8)				
	CONNECT METHOD, STD LENGTH m (ft)		flared type, 5.0(16.4)			flared type, 5.0(16.4)				
	PIPE LENGTH RANGE m (ft)		5 ~ 50 (16.4 ~ 164.0)						~	~
	I/D&O/D HEIGHT DIFFERENCE m (ft)		15 (OD located lower) / 30 (OD located higher) (49.2/98.4)							
	ADD GAS AMOUNT g/m (oz/ft)		50 (0.538)							
	PIPE LENGTH FOR ADDITIONAL GAS m (ft)		30 (98.4)							

*1: In case it is necessary to indicate the air flow volume in (l/s), the value in (m^3/min.) shall be multiplied by 16.7 and rounded down the decimal point.
*2: If the EUROVENT Certified models can be operated under the extra-low temperature condition, -7°C dry bulb and -8°C wet-bulb temperatures with rated voltage 230 V shall be used.
*3: Network Impedance shall be applicable for EUROPE and CHINA models.
*4: The annual consumption is calculated by multiplying the input power at 230 V (400 V) by an average of 500 hours per year in cooling mode.
*5: EER and COP classification is at 230 V (400 V) only in accordance with EU directive 2002/31/EC.
*6: SEER and SCOP classification is at 230V(400V) only in accordance with EN-14825. For heating, SCOP indicates the value of only Average heating season, Other fiche data indicates in an attached sheet.

Simultaneous (Twin) -Type

1-1. Unit Speci□cations

PE1

4. Low Silhouette Ducted Type S-71PF1E5A×2 / U-140PE1E5A

INDOOR		MODEL	S-71PF1E5A×2							
OUTDOOR		MODEL				U-140PE1E5A				
Branch pipe		MODEL	CZ-P155BK1							
PERFORMANCE TEST CONDITION			ISO13253 / EN14511 / EN12102							
POWER SUPPLY		ø, Hz	1ø 50Hz			1ø 50Hz				
		V	220	230	240	220	230	240	Min	Max
COOLING	CAPACITY	kW	14.0	14.0	14.0				3.3	15.5
		BTU/h	47800	47800	47800				11300	52900
	CURRENT	A	0.91×2	0.89×2	0.87×2	20.1	19.3	18.6	-	-
	INPUT POWER	W	120×2	120×2	120×2	4.085k	4.085k	4.085k	-	-
		TOTAL W		-		4.325k	4.325k	4.325k	840	6.000k
	ANNUAL CONSUMPTION	TOTAL kWh ※4		-		-	2162.5	-	-	-
	EER/EER CLASS	TOTAL(W/W)※5/("A"~"G")	-	-	-	3.24	3.24 / A	3.24	3.93	2.58
	Erp ※6 Pdsign	kW	-	-	-	-	-	-		
	Erp ※6 SEER	(W/W)	-	-	-	-	-	-		
	Erp ※6 Annual consumption	kWh	-	-	-	-	-	-		
	Erp ※6 Class		-	-	-	-	-	-		
	POWER FACTOR	%	-	-	-	93	92	92	-	-
	NOISE INDOOR (H/M/L)	dB-A		35/32/26						
		Power Level dB		57/54/48						
	NOISE OUTDOOR (H/L)	dB-A					54/-			
		Power Level dB					71/-			
HEATING	CAPACITY	kW	16.0	16.0	16.0				4.1	18.0
		BTU/h	54600	54600	54600				14000	61400
	CURRENT	A	0.91×2	0.89×2	0.87×2	19.9	19.1	18.4	-	-
	INPUT POWER	W	120×2	120×2	120×2	4.215k	4.215k	4.215k	-	-
		TOTAL W		-		4.455k	4.455k	4.455k	900	5.900k
	COP/COP CLASS	TOTAL(W/W)※5/("A"~"G")	-	-	-	3.59	3.59 / A	3.59	4.56	3.05
	Erp ※6 Pdsign	kW	-	-	-	-	-	-		
	Erp ※6 Tbivalen	°C	-	-	-	-	-	-		
	Erp ※6 SCOP	(W/W)	-	-	-	-	-	-		
	Erp ※6 Annual consumption	kWh	-	-	-	-	-	-		
	Erp ※6 Class		-	-	-	-	-	-		
	POWER FACTOR	%	-	-	-	96	96	95	-	-
	NOISE INDOOR (H/M/L)	dB-A		35/32/26			-		/	/
		Power Level dB		57/54/48			-			
	NOISE OUTDOOR (H/L)	dB-A		-			55/-		/	/
		Power Level dB		-			71/-			
EXTRA LOW TEMP	Total CAPACITY(kW)/INPUT POWER(W)/COP					-				
MAX CURRENT(A)/MAX INPUT POWER(W)			1.26×2/160×2	1.20×2/160×2	1.15×2/160×2	30.0/6.450k	30.0/6.650k	30.0/6.850k	/	
STARTING CURRENT(A)/COMP OUTPUT(W)			-	-	-	20.1/3.0k	19.3/3.0k	18.6/3.0k	/	
NETWORK IMPEDANCE (ΩMAX.)				-			-			
FM OUTPUT (W)				120			90x2		/	
MOISTURE REMOVAL VOLUME		L/h(Pt/h)	9.0	(4.5×2)	(18.9)		-			
External static pressure		Pa		70 (MIN10 - MAX150)						
I/D AIR FLOW	COOL	m^3/min (ft^3/min)		[21/19/15 (742/671/530)]×2						
	HEAT	m^3/min (ft^3/min)		[21/19/15 (742/671/530)]×2						
O/D AIR FLOW	COOL	m^3/min (ft^3/min)					135	(4767)		
	HEAT	m^3/min (ft^3/min)					120	(4238)		
REFRIGERANT TYPE, AMOUNT g(oz)						R410A	3.40k	(119.9)	/	
PROD IM	HEIGHT : H mm(inch)			290 (11-13/32)			1416 (55-3/4)		/	
	WIDTH : W mm(inch)			1000 (39-3/8)			940 (37-1/32)		/	
	DEPTH : D mm(inch)			700 (27-9/16)			340 (13-13/32)		/	
PACK IM	HEIGHT : H mm			355			1556		/	
	WIDTH : W mm			1214			1055		/	
	DEPTH : D mm			850			485		/	
MASS	(NET) kg(lb)			33 (73)			98 (216)		/	
	(GROSS) kg(lb)			41 (91)			108 (238)		/	
LAYERS LIMIT (actually)				9 (10)			1 (2)			
Operation Condition		Cool O.D(DBT)		18°C ~ 32°C			-15°C ~ 46°C			
		Heat O.D(DBT)		16°C ~ 30°C			-20°C ~ 24°C			
PIPING	PIPE DIAMETER mm (inch)		(Liquid)ø9.52(3/8) (Gas)ø15.88(5/8)			(Liquid)ø9.52(3/8) (Gas)ø15.88(5/8)				
	CONNECT METHOD, STD LENGTH m (ft)		flared type, 5.0(16.4)			flared type, 5.0(16.4)				
	PIPE LENGTH RANGE m (ft)			5 ~ 75		(16.4 ~ 246.1)			~	~
	I/D&O/D HEIGHT DIFFERENCE m (ft)		15 (OD located lower) / 30 (OD located higher)				(49.2/98.4)			
	ADD GAS AMOUNT g/m (oz/ft)			50		(0.538)				
	PIPE LENGTH FOR ADDITIONAL GAS m (ft)			30		(98.4)				

*1: In case it is necessary to indicate the air □ow volume in (l/s), the value in (m^3/min.) shall be multiplied by 16.7 and rounded down the decimal point.
*2: If the EUROVENT Certi□ed models can be operated under the □extra-low□temperature condition, -7□C dry bulb and -8□C wet-bulb temperatures with rated voltage 230 V shall be used.
*3: Network Impedance shall be applicable for EUROPE and CHINA models.
*4: The annual consumption is calculated by multiplying the input power at 230 V (400 V) by an average of 500 hours per year in cooling mode.
*5: EER and COP classification is at 230 V (400 V) only in accordance with EU directive 2002/31/EC.
*6: SEER and SCOP classification is at 230V(400V) only in accordance with EN-14825. For heating, SCOP indicates the value of only Average heating season, Other fiche data indicates in an attached sheet.

Single -Type

1-1. Unit Speci□cations

PE1

4. Low Silhouette Ducted Type S-100PF1E5A / U-100PE1E5A

INDOOR		MODEL	S-100PF1E5A							
OUTDOOR		MODEL				U-100PE1E5A				
Branch pipe		MODEL				-				
PERFORMANCE TEST CONDITION			ISO13253 / EN14511 / EN14825 / EN12102							
POWER SUPPLY		ø, Hz	1ø 50Hz			1ø 50Hz				
		V	220	230	240	220	230	240	Min	Max
COOLING	CAPACITY	kW	10.0	10.0	10.0				3.3	12.5
		BTU/h	34100	34100	34100				11300	42700
	CURRENT	A	1.35	1.30	1.27	11.0	10.6	10.3	-	-
	INPUT POWER	W	195	195	195	2.245k	2.245k	2.245k	-	-
		TOTAL W		-		2.440k	2.440k	2.440k	840	3.700k
	ANNUAL CONSUMPTION	TOTAL kWh ※4		-		-	1220	-	-	-
	EER/EER CLASS	TOTAL(W/W)※5("A"~"G")	-	-	-	4.10	4.10 / A	4.10	3.93	3.38
	Erp ※6 Pdsign	kW	-	-	-	-	10.0	-		
	Erp ※6 SEER	(W/W)	-	-	-	-	5.8	-		
	Erp ※6 Annual consumption	kWh	-	-	-	-	603	-		
	Erp ※6 Class		-	-	-	-	A+	-		
	POWER FACTOR	%	-	-	-	93	92	91	-	-
	NOISE INDOOR (H/M/L)	dB-A		38/34/31			-			
		Power Level dB		60/56/53			-			
	NOISE OUTDOOR (H/L)	dB-A					52/-			
		Power Level dB					69/-			
HEATING	CAPACITY	kW	11.2	11.2	11.2				4.1	14.0
		BTU/h	38200	38200	38200				14000	47800
	CURRENT	A	1.37	1.34	1.29	11.6	11.2	10.7	-	-
	INPUT POWER	W	200	200	200	2.400k	2.400k	2.400k	-	-
		TOTAL W		-		2.600k	2.600k	2.600k	900	4.400k
	COP/COP CLASS	TOTAL(W/W)※5("A"~"G")	-	-	-	4.31	4.31 / A	4.31	4.56	3.18
	Erp ※6 Pdsign	kW	-	-	-	-	10.0	-		
	Erp ※6 Tbivalen	°C	-	-	-	-	-10	-		
	Erp ※6 SCOP	(W/W)	-	-	-	-	3.8	-		
	Erp ※6 Annual consumption	kWh	-	-	-	-	3684	-		
	Erp ※6 Class		-	-	-	-	A	-		
	POWER FACTOR	%	-	-	-	94	94	93	-	-
	NOISE INDOOR (H/M/L)	dB-A		38/34/31			-		/	/
		Power Level dB		60/56/53			-			
	NOISE OUTDOOR (H/L)	dB-A		-			52/-		/	/
		Power Level dB		-			69/-			
EXTRA LOW TEMP	Total CAPACITY(kW)/INPUT POWER(W)/COP					-				
MAX CURRENT(A)/MAX INPUT POWER(W)			1.80/265	1.75/265	1.70/265	25.0/5.350k	25.0/5.550k	25.0/5.750k	/	
STARTING CURRENT(A)/COMP OUTPUT(W)			-	-	-	11.6/3.0k	11.2/3.0k	10.7/3.0k	/	
NETWORK IMPEDANCE (ΩMAX.)				-			-			
FM OUTPUT (W)				200			90×2		/	
MOISTURE REMOVAL VOLUME		L/h(Pt/h)	6.0		(12.6)		-			
External static pressure		Pa		100 (MIN10 - MAX150)						
I/D AIR FLOW	COOL	m^3/min (ft^3/min)		32/26/21 (1130/918/742)						
	HEAT	m^3/min (ft^3/min)		32/26/21 (1130/918/742)						
O/D AIR FLOW	COOL	m^3/min (ft^3/min)				110		(3885)		
	HEAT	m^3/min (ft^3/min)				95		(3355)		
REFRIGERANT TYPE, AMOUNT g(oz)						R410A	3.40k	(119.9)	/	
PROD IM	HEIGHT : H mm(inch)			290 (11-13/32)			1416 (55-3/4)		/	
	WIDTH : W mm(inch)			1400 (55-1/8)			940 (37-1/32)		/	
	DEPTH : D mm(inch)			700 (27-9/16)			340 (13-13/32)		/	
PACK IM	HEIGHT : H mm			355			1556		/	
	WIDTH : W mm			1614			1055		/	
	DEPTH : D mm			850			485		/	
MASS	(NET) kg(lb)			45 (99)			98 (216)		/	
	(GROSS) kg(lb)			54 (119)			108 (238)		/	
LAYERS LIMIT (actually)				9 (10)			1 (2)			
Operation Condition		Cool O.D(DBT)		18°C ~ 32°C			-15°C ~ 46°C			
		Heat O.D(DBT)		16°C ~ 30°C			-20°C ~ 24°C			
PIPING	PIPE DIAMETER mm (inch)		(Liquid)ø9.52(3/8) (Gas)ø15.88(5/8)			(Liquid)ø9.52(3/8) (Gas)ø15.88(5/8)				
	CONNECT METHOD, STD LENGTH m (ft)		flared type, 5.0(16.4)			flared type, 5.0(16.4)				
	PIPE LENGTH RANGE m (ft)			5 ~ 75		(16.4 ~ 246.1)			~	~
	I/D&O/D HEIGHT DIFFERENCE m (ft)		15 (OD located lower) / 30 (OD located higher)				(49.2/98.4)			
	ADD GAS AMOUNT g/m (oz/ft)			50		(0.538)				
	PIPE LENGTH FOR ADDITIONAL GAS m (ft)			30		(98.4)				

*1: In case it is necessary to indicate the air □ow volume in (l/s), the value in (m^3/min.) shall be multiplied by 16.7 and rounded down the decimal point.
*2: If the EUROVENT Certi□ed models can be operated under the □extra-low□temperature condition, -7□C dry bulb and -8□C wet-bulb temperatures with rated voltage 230 V shall be used.
*3: Network Impedance shall be applicable for EUROPE and CHINA models.
*4: The annual consumption is calculated by multiplying the input power at 230 V (400 V) by an average of 500 hours per year in cooling mode.
*5: EER and COP classification is at 230 V (400 V) only in accordance with EU directive 2002/31/EC.
*6: SEER and SCOP classification is at 230V(400V) only in accordance with EN-14825. For heating, SCOP indicates the value of only Average heating season, Other fiche data indicates in an attached sheet.

Single -Type

1-1. Unit Speci□cations

PE1

4. Low Silhouette Ducted Type S-125PF1E5A / U-125PE1E5A

INDOOR		MODEL	S-125PF1E5A							
OUTDOOR		MODEL				U-125PE1E5A				
Branch pipe		MODEL				-				
PERFORMANCE TEST CONDITION			ISO13253 / EN14511 / EN12102							
POWER SUPPLY		ø, Hz	1ø 50Hz			1ø 50Hz				
		V	220	230	240	220	230	240	Min	Max
COOLING	CAPACITY	kW	12.5	12.5	12.5				3.3	14.0
		BTU/h	42700	42700	42700				11300	47800
	CURRENT	A	1.48	1.44	1.39	16.6	15.9	15.3	-	-
	INPUT POWER	W	215	215	215	3.355k	3.355k	3.355k	-	-
		TOTAL W		-		3.570k	3.570k	3.570k	840	4.600k
	ANNUAL CONSUMPTION	TOTAL kWh ※4		-		-	1785	-	-	-
	EER/EER CLASS	TOTAL(W/W)※5("A"~"G")	-	-	-	3.50	3.50 / A	3.50	3.93	3.04
	Erp ※6 Pdsign	kW	-	-	-	-	-	-		
	Erp ※6 SEER	(W/W)	-	-	-	-	-	-		
	Erp ※6 Annual consumption	kWh	-	-	-	-	-	-		
	Erp ※6 Class		-	-	-	-	-	-		
	POWER FACTOR	%	-	-	-	92	92	91	-	-
	NOISE INDOOR (H/M/L)	dB-A		39/35/32			-			
		Power Level dB		61/57/54			-			
	NOISE OUTDOOR (H/L)	dB-A					53/-			
		Power Level dB					70/-			
HEATING	CAPACITY	kW	14.0	14.0	14.0				4.1	16.0
		BTU/h	47800	47800	47800				14000	54600
	CURRENT	A	1.46	1.42	1.38	16.3	15.8	15.1	-	-
	INPUT POWER	W	210	210	210	3.270k	3.270k	3.270k	-	-
		TOTAL W		-		3.480k	3.480k	3.480k	900	5.200k
	COP/COP CLASS	TOTAL(W/W)※5("A"~"G")	-	-	-	4.02	4.02 / A	4.02	4.56	3.08
	Erp ※6 Pdsign	kW	-	-	-	-	-	-		
	Erp ※6 Tbivalen	°C	-	-	-	-	-	-		
	Erp ※6 SCOP	(W/W)	-	-	-	-	-	-		
	Erp ※6 Annual consumption	kWh	-	-	-	-	-	-		
	Erp ※6 Class		-	-	-	-	-	-		
	POWER FACTOR	%	-	-	-	91	90	90	-	-
	NOISE INDOOR (H/M/L)	dB-A		39/35/32			-		/	/
		Power Level dB		61/57/54			-			
	NOISE OUTDOOR (H/L)	dB-A		-			53/-		/	/
		Power Level dB		-			70/-			
EXTRA LOW TEMP	Total CAPACITY(kW)/INPUT POWER(W)/COP					-				
MAX CURRENT(A)/MAX INPUT POWER(W)			1.80/265	1.75/265	1.70/265	28.0/6.000k	28.0/6.200k	28.0/6.400k	/	
STARTING CURRENT(A)/COMP OUTPUT(W)			-	-	-	16.6/3.0k	15.9/3.0k	15.3/3.0k	/	
NETWORK IMPEDANCE (ΩMAX.)				-			-			
FM OUTPUT (W)				200			90×2		/	
MOISTURE REMOVAL VOLUME		L/h(Pt/h)	7.9		(16.6)		-			
External static pressure		Pa	100 (MIN10 - MAX150)							
I/D AIR FLOW	COOL	m^3/min (ft^3/min)	34/29/23 (1201/1024/812)							
	HEAT	m^3/min (ft^3/min)	34/29/23 (1201/1024/812)							
O/D AIR FLOW	COOL	m^3/min (ft^3/min)				130		(4591)		
	HEAT	m^3/min (ft^3/min)				110		(3885)		
REFRIGERANT TYPE, AMOUNT g(oz)						R410A	3.40k	(119.9)	/	
PROD IM	HEIGHT : H mm(inch)		290 (11-13/32)			1416 (55-3/4)			/	
	WIDTH : W mm(inch)		1400 (55-1/8)			940 (37-1/32)			/	
	DEPTH : D mm(inch)		700 (27-9/16)			340 (13-13/32)			/	
PACD IM	HEIGHT : H mm		355			1556			/	
	WIDTH : W mm		1614			1055			/	
	DEPTH : D mm		850			485			/	
MASS	(NET) kg(lb)		45 (99)			98 (216)			/	
	(GROSS) kg(lb)		54 (119)			108 (238)			/	
LAYERS LIMIT (actually)			9 (10)			1 (2)				
Operation Condition		Cool O.D(DBT)	18°C ~ 32°C			-15°C ~ 46°C				
		Heat O.D(DBT)	16°C ~ 30°C			-20°C ~ 24°C				
PIPING	PIPE DIAMETER mm (inch)		(Liquid)ø9.52(3/8) (Gas)ø15.88(5/8)			(Liquid)ø9.52(3/8) (Gas)ø15.88(5/8)				
	CONNECT METHOD, STD LENGTH m (ft)		flared type, 5.0(16.4)			flared type, 5.0(16.4)				
	PIPE LENGTH RANGE m (ft)		5 ~ 75 (16.4 ~ 246.1)						~	~
	I/D&O/D HEIGHT DIFFERENCE m (ft)		15 (OD located lower) / 30 (OD located higher) (49.2/98.4)							
	ADD GAS AMOUNT g/m (oz/ft)		50 (0.538)							
	PIPE LENGTH FOR ADDITIONAL GAS m (ft)		30 (98.4)							

*1: In case it is necessary to indicate the air □ow volume in (l/s), the value in (m^3/min.) shall be multiplied by 16.7 and rounded down the decimal point.
*2: If the EUROVENT Certi□ed models can be operated under the □extra-low□temperature condition, -7□C dry bulb and -8□C wet-bulb temperatures with rated voltage 230 V shall be used.
*3: Network Impedance shall be applicable for EUROPE and CHINA models.
*4: The annual consumption is calculated by multiplying the input power at 230 V (400 V) by an average of 500 hours per year in cooling mode.
*5: EER and COP classification is at 230 V (400 V) only in accordance with EU directive 2002/31/EC.
*6: SEER and SCOP classification is at 230V(400V) only in accordance with EN-14825. For heating, SCOP indicates the value of only Average heating season, Other fiche data indicates in an attached sheet.

Single -Type

1-1. Unit Speci□cations

PE1

4. Low Silhouette Ducted Type S-140PF1E5A / U-140PE1E5A

INDOOR		MODEL	S-140PF1E5A							
OUTDOOR		MODEL				U-140PE1E5A				
Branch pipe		MODEL				-				
PERFORMANCE TEST CONDITION			ISO13253 / EN14511 / EN12102							
POWER SUPPLY		ø, Hz	1ø 50Hz			1ø 50Hz				
		V	220	230	240	220	230	240	Min	Max
COOLING	CAPACITY	kW	14.0	14.0	14.0				3.3	15.5
		BTU/h	47800	47800	47800				11300	52900
	CURRENT	A	1.55	1.50	1.47	20.1	19.3	18.6	-	-
	INPUT POWER	W	225	225	225	4.085k	4.085k	4.085k	-	-
		TOTAL W		-		4.310k	4.310k	4.310k	840	6.000k
	ANNUAL CONSUMPTION	TOTAL kWh ※4		-		-	2155	-	-	-
	EER/EER CLASS	TOTAL(W/W)※5("A"~"G")	-	-	-	3.25	3.25 / A	3.25	3.93	2.58
	Erp ※6 Pdsign	kW	-	-	-	-	-	-		
	Erp ※6 SEER	(W/W)	-	-	-	-	-	-		
	Erp ※6 Annual consumption	kWh	-	-	-	-	-	-		
	Erp ※6 Class		-	-	-	-	-	-		
	POWER FACTOR	%	-	-	-	93	92	92	-	-
	NOISE INDOOR (H/M/L)	dB-A		40/36/33			-			
		Power Level dB		62/58/55			-			
	NOISE OUTDOOR (H/L)	dB-A					54/-			
		Power Level dB					71/-			
HEATING	CAPACITY	kW	16.0	16.0	16.0				4.1	18.0
		BTU/h	54600	54600	54600				14000	61400
	CURRENT	A	1.55	1.50	1.46	19.9	19.1	18.4	-	-
	INPUT POWER	W	225	225	225	4.215k	4.215k	4.215k	-	-
		TOTAL W		-		4.440k	4.440k	4.440k	900	5.900k
	COP/COP CLASS	TOTAL(W/W)※5("A"~"G")	-	-	-	3.60	3.60 / A	3.60	4.56	3.05
	Erp ※6 Pdsign	kW	-	-	-	-	-	-		
	Erp ※6 Tbivalen	°C	-	-	-	-	-	-		
	Erp ※6 SCOP	(W/W)	-	-	-	-	-	-		
	Erp ※6 Annual consumption	kWh	-	-	-	-	-	-		
	Erp ※6 Class		-	-	-	-	-	-		
	POWER FACTOR	%	-	-	-	96	96	95	-	-
	NOISE INDOOR (H/M/L)	dB-A		40/36/33			-		/	/
		Power Level dB		62/58/55			-			
	NOISE OUTDOOR (H/L)	dB-A		-			55/-		/	/
		Power Level dB		-			71/-			
EXTRA LOW TEMP	Total CAPACITY(kW)INPUT POWER(W)COP					-				
MAX CURRENT(A)/MAX INPUT POWER(W)			1.91/285	1.86/285	1.81/285	30.0/6.450k	30.0/6.650k	30.0/6.850k	/	
STARTING CURRENT(A)/COMP OUTPUT(W)			-	-	-	20.1/3.0k	19.3/3.0k	18.6/3.0k	/	
NETWORK IMPEDANCE (ΩMAX.)				-			-			
FM OUTPUT (W)				200			90×2		/	
MOISTURE REMOVAL VOLUME		L/h(Pt/h)	9.0		(18.9)		-			
External static pressure		Pa	100 (MIN10 - MAX150)							
I/D AIR FLOW	COOL	m^3/min (ft^3/min)	36/32/25 (1271/1130/883)							
	HEAT	m^3/min (ft^3/min)	36/32/25 (1271/1130/883)							
O/D AIR FLOW	COOL	m^3/min (ft^3/min)				135		(4767)		
	HEAT	m^3/min (ft^3/min)				120		(4238)		
REFRIGERANT TYPE, AMOUNT g(oz)						R410A	3.40k	(119.9)	/	
PROD IM	HEIGHT : H mm(inch)		290 (11-13/32)			1416 (55-3/4)			/	
	WIDTH : W mm(inch)		1400 (55-1/8)			940 (37-1/32)			/	
	DEPTH : D mm(inch)		700 (27-9/16)			340 (13-13/32)			/	
PACK IM	HEIGHT : H mm		355			1556			/	
	WIDTH : W mm		1614			1055			/	
	DEPTH : D mm		850			485			/	
MASS	(NET) kg(lb)		45 (99)			98 (216)			/	
	(GROSS) kg(lb)		54 (119)			108 (238)			/	
LAYERS LIMIT (actually)			9 (10)			1 (2)				
Operation Condition		Cool O.D(DBT)	18°C ~ 32°C			-15°C ~ 46°C				
		Heat O.D(DBT)	16°C ~ 30°C			-20°C ~ 24°C				
PIPING	PIPE DIAMETER mm (inch)		(Liquid)ø9.52(3/8) (Gas)ø15.88(5/8)			(Liquid)ø9.52(3/8) (Gas)ø15.88(5/8)				
	CONNECT METHOD, STD LENGTH m (ft)		flared type, 5.0(16.4)			flared type, 5.0(16.4)				
	PIPE LENGTH RANGE m (ft)		5 ~ 75 (16.4 ~ 246.1)						~	~
	I/D&O/D HEIGHT DIFFERENCE m (ft)		15 (OD located lower) / 30 (OD located higher) (49.2/98.4)							
	ADD GAS AMOUNT g/m (oz/ft)		50 (0.538)							
	PIPE LENGTH FOR ADDITIONAL GAS m (ft)		30 (98.4)							

*1: In case it is necessary to indicate the air □ow volume in (l/s), the value in (m^3/min.) shall be multiplied by 16.7 and rounded down the decimal point.
*2: If the EUROVENT Certi□ed models can be operated under the □extra-low□temperature condition, -7□C dry bulb and -8□C wet-bulb temperatures with rated voltage 230 V shall be used.
*3: Network Impedance shall be applicable for EUROPE and CHINA models.
*4: The annual consumption is calculated by multiplying the input power at 230 V (400 V) by an average of 500 hours per year in cooling mode.
*5: EER and COP classification is at 230 V (400 V) only in accordance with EU directive 2002/31/EC.
*6: SEER and SCOP classification is at 230V(400V) only in accordance with EN-14825. For heating, SCOP indicates the value of only Average heating season, Other fiche data indicates in an attached sheet.

Simultaneous (Twin) -Type

1-1. Unit Specifications

PE1

4. Low Silhouette Ducted Type S-36PF1E5A×2 / U-71PE1E8A

INDOOR		MODEL	S-36PF1E5A×2							
OUTDOOR		MODEL				U-71PE1E8A				
Branch pipe		MODEL	CZ-P155BK1							
PERFORMANCE TEST CONDITION			ISO13253 / EN14511 / EN14825 / EN12102							
POWER SUPPLY		ø, Hz	1ø 50Hz			3ø 50Hz				
		V	220	230	240	380	400	415	Min	Max
COOLING	CAPACITY	kW	7.10	7.10	7.10				3.2	8.0
		BTU/h	24200	24200	24200				10900	27300
	CURRENT	A	0.60×2	0.57×2	0.56×2	2.75	2.65	2.60	-	-
	INPUT POWER	W	70×2	70×2	70×2	1.730k	1.730k	1.730k	-	-
		TOTAL W		-		1.870k	1.870k	1.870k	640	2.650k
	ANNUAL CONSUMPTION	TOTAL kWh ※4		-		-	935	-	-	-
	EER/EER CLASS	TOTAL(W/W)※5/("A"~"G")	-	-	-	3.80	3.80 / A	3.80	5.00	3.02
	Erp ※6 Pdsign	kW	-	-	-	-	7.1	-		
	Erp ※6 SEER	(W/W)	-	-	-	-	5.8	-		
	Erp ※6 Annual consumption	kWh	-	-	-	-	428	-		
	Erp ※6 Class		-	-	-	-	A+	-		
	POWER FACTOR	%	-	-	-	96	94	93	-	-
	NOISE INDOOR (H/M/L)	dB-A		33/29/25						
		Power Level dB		55/51/47						
	NOISE OUTDOOR (H/L)	dB-A					48/-			
		Power Level dB					65/-			
HEATING	CAPACITY	kW	8.0	8.0	8.0				2.8	9.0
		BTU/h	27300	27300	27300				9600	30700
	CURRENT	A	0.60×2	0.57×2	0.56×2	3.10	3.00	2.90	-	-
	INPUT POWER	W	70×2	70×2	70×2	1.960k	1.960k	1.960k	-	-
		TOTAL W		-		2.100k	2.100k	2.100k	580	2.900k
	COP/COP CLASS	TOTAL(W/W)※5/("A"~"G")	-	-	-	3.81	3.81 / A	3.81	4.83	3.10
	Erp ※6 Pdsign	kW	-	-	-	-	7.1	-		
	Erp ※6 Tbivalen	°C	-	-	-	-	-9	-		
	Erp ※6 SCOP	(W/W)	-	-	-	-	3.9	-		
	Erp ※6 Annual consumption	kWh	-	-	-	-	2548	-		
	Erp ※6 Class		-	-	-	-	A	-		
	POWER FACTOR	%	-	-	-	96	94	94	-	-
	NOISE INDOOR (H/M/L)	dB-A		33/29/25			-		/	/
		Power Level dB		55/51/47			-			
	NOISE OUTDOOR (H/L)	dB-A		-			50/-		/	/
		Power Level dB		-			67/-			
EXTRA LOW TEMP	Total CAPACITY(kW)/INPUT POWER(W)/COP					-				
MAX CURRENT(A)/MAX INPUT POWER(W)			0.86×2/105×2	0.82×2/105×2	0.79×2/105×2	7.0/4.150k	7.0/4.360k	7.0/4.530k	/	
STARTING CURRENT(A)/COMP OUTPUT(W)			-	-	-	3.10/2.0k	3.00/2.0k	2.90/2.0k	/	
NETWORK IMPEDANCE (ΩMAX.)				-			-			
FM OUTPUT (W)				120			90		/	
MOISTURE REMOVAL VOLUME		L/h(Pt/h)	4.2	(2.1×2)	(8.8)		-			
External static pressure		Pa	70 (MIN10 - MAX150)							
I/D AIR FLOW	COOL	m^3/min (ft^3/min)	[14/13/10 (494/459/353)]×2							
	HEAT	m^3/min (ft^3/min)	[14/13/10 (494/459/353)]×2							
O/D AIR FLOW	COOL	m^3/min (ft^3/min)				60		(2119)		
	HEAT	m^3/min (ft^3/min)				60		(2119)		
REFRIGERANT TYPE, AMOUNT g(oz)						R410A	2.35k	(82.9)	/	
PROD DIM	HEIGHT : H mm(inch)		290 (11-13/32)			996 (39-7/32)			/	
	WIDTH : W mm(inch)		800 (31-1/2)			940 (37-1/32)			/	
	DEPTH : D mm(inch)		700 (27-9/16)			340 (13-13/32)			/	
PACK DIM	HEIGHT : H mm		355			1136			/	
	WIDTH : W mm		1014			1055			/	
	DEPTH : D mm		850			485			/	
MASS	(NET) kg(lb)		28 (62)			71 (157)			/	
	(GROSS) kg(lb)		35 (78)			79 (174)			/	
LAYERS LIMIT (actually)			9 (10)			2 (3)				
Operation Condition		Cool O.D(DBT)	18°C ~ 32°C			-15°C ~ 46°C				
		Heat O.D(DBT)	16°C ~ 30°C			-20°C ~ 24°C				
PIPING	PIPE DIAMETER mm (inch)		(Liquid)ø6.35(1/4) (Gas)ø12.7(1/2)			(Liquid)ø9.52(3/8) (Gas)ø15.88(5/8)				
	CONNECT METHOD, STD LENGTH m (ft)		flared type, 5.0(16.4)			flared type, 5.0(16.4)				
	PIPE LENGTH RANGE m (ft)		5 ~ 50 (16.4 ~ 164.0)						~	~
	I/D&O/D HEIGHT DIFFERENCE m (ft)		15 (OD located lower) / 30 (OD located higher) (49.2/98.4)							
	ADD GAS AMOUNT g/m (oz/ft)		50 (0.538)							
	PIPE LENGTH FOR ADDITIONAL GAS m (ft)		30 (98.4)							

*1: In case it is necessary to indicate the air flow volume in (l/s), the value in (m^3/min.) shall be multiplied by 16.7 and rounded down the decimal point.
*2: If the EUROVENT Certified models can be operated under the extra-low temperature condition, -7°C dry bulb and -8°C wet-bulb temperatures with rated voltage 230 V shall be used.
*3: Network Impedance shall be applicable for EUROPE and CHINA models.
*4: The annual consumption is calculated by multiplying the input power at 230 V (400 V) by an average of 500 hours per year in cooling mode.
*5: EER and COP classification is at 230 V (400 V) only in accordance with EU directive 2002/31/EC.
*6: SEER and SCOP classification is at 230V(400V) only in accordance with EN-14825. For heating, SCOP indicates the value of only Average heating season, Other fiche data indicates in an attached sheet.

Simultaneous (Triple) -Type

1-1. Unit Specifications

PE1

4. Low Silhouette Ducted Type S-36PF1E5A×3 / U-100PE1E8A

INDOOR		MODEL	S-36PF1E5A×3							
OUTDOOR		MODEL				U-100PE1E8A				
Branch pipe		MODEL	CZ-P3HPC2							
PERFORMANCE TEST CONDITION			ISO13253 / EN14511 / EN14825 / EN12102							
POWER SUPPLY		ø, Hz	1ø 50Hz			3ø 50Hz				
		V	220	230	240	380	400	415	Min	Max
COOLING	CAPACITY	kW	10.0	10.0	10.0				3.3	12.5
		BTU/h	34100	34100	34100				11300	42700
	CURRENT	A	0.6×3	0.57×3	0.56×3	3.68	3.53	3.43	-	-
	INPUT POWER	W	70×3	70×3	70×3	2.245k	2.245k	2.245k	-	-
		TOTAL W		-		2.455k	2.455k	2.455k	840	3.700k
	ANNUAL CONSUMPTION	TOTAL kWh ※4		-		-	1227.5	-	-	-
	EER/EER CLASS	TOTAL(W/W)※5/("A"~"G")	-	-	-	4.07	4.07 / A	4.07	3.93	3.38
	Erp ※6 Pdsign	kW	-	-	-	-	10.0	-		
	Erp ※6 SEER	(W/W)	-	-	-	-	5.7	-		
	Erp ※6 Annual consumption	kWh	-	-	-	-	614	-		
	Erp ※6 Class		-	-	-	-	A+	-		
	POWER FACTOR	%	-	-	-	93	92	91	-	-
	NOISE INDOOR (H/M/L)	dB-A		33/29/25						
		Power Level dB		55/51/47						
	NOISE OUTDOOR (H/L)	dB-A					52/-			
		Power Level dB					69/-			
HEATING	CAPACITY	kW	11.2	11.2	11.2				4.1	14.0
		BTU/h	38200	38200	38200				14000	47800
	CURRENT	A	0.6×3	0.57×3	0.56×3	3.86	3.70	3.58	-	-
	INPUT POWER	W	70×3	70×3	70×3	2.400k	2.400k	2.400k	-	-
		TOTAL W		-		2.610k	2.610k	2.610k	900	4.400k
	COP/COP CLASS	TOTAL(W/W)※5/("A"~"G")	-	-	-	4.29	4.29 / A	4.29	4.56	3.18
	Erp ※6 Pdsign	kW	-	-	-	-	10.0	-		
	Erp ※6 Tbivalen	°C	-	-	-	-	-10	-		
	Erp ※6 SCOP	(W/W)	-	-	-	-	3.8	-		
	Erp ※6 Annual consumption	kWh	-	-	-	-	3684	-		
	Erp ※6 Class		-	-	-	-	A	-		
	POWER FACTOR	%	-	-	-	94	94	93	-	-
	NOISE INDOOR (H/M/L)	dB-A		33/29/25			-		/	/
		Power Level dB		55/51/47			-			
	NOISE OUTDOOR (H/L)	dB-A		-			52/-		/	/
		Power Level dB		-			69/-			
EXTRA LOW TEMP	Total CAPACITY(kW)/INPUT POWER(W)/COP				-					
MAX CURRENT(A)/MAX INPUT POWER(W)			0.86×3/105×3	0.82×3/105×3	0.79×3/105×3	9.0/5.550k	9.0/5.850k	9.0/6.100k	/	
STARTING CURRENT(A)/COMP OUTPUT(W)			-	-	-	3.86/3.0k	3.70/3.0k	3.58/3.0k	/	
NETWORK IMPEDANCE (ΩMAX.)				-			-			
FM OUTPUT (W)				120			90x2		/	
MOISTURE REMOVAL VOLUME		L/h(Pt/h)	6.0	(2.0×3)	(12.6)		-			
External static pressure		Pa	70 (MIN10 - MAX150)							
I/D AIR FLOW	COOL	m^3/min (ft^3/min)	[14/13/10 (494/459/353)]×3							
	HEAT	m^3/min (ft^3/min)	[14/13/10 (494/459/353)]×3							
O/D AIR FLOW	COOL	m^3/min (ft^3/min)				110		(3885)		
	HEAT	m^3/min (ft^3/min)				95		(3355)		
REFRIGERANT TYPE, AMOUNT g(oz)						R410A	3.40k	(119.9)	/	
PROD DIM	HEIGHT : H mm(inch)		290 (11-13/32)			1416 (55-3/4)			/	
	WIDTH : W mm(inch)		800 (31-1/2)			940 (37-1/32)			/	
	DEPTH : D mm(inch)		700 (27-9/16)			340 (13-13/32)			/	
PAC DIM	HEIGHT : H mm		355			1556			/	
	WIDTH : W mm		1014			1055			/	
	DEPTH : D mm		850			485			/	
MASS	(NET) kg(lb)		28 (62)			98 (216)			/	
	(GROSS) kg(lb)		35 (78)			108 (238)			/	
LAYERS LIMIT (actually)			9 (10)			1 (2)				
Operation Condition		Cool O.D(DBT)	18°C ~ 32°C			-15°C ~ 46°C				
		Heat O.D(DBT)	16°C ~ 30°C			-20°C ~ 24°C				
PIPING	PIPE DIAMETER mm (inch)		(Liquid)ø6.35(1/4) (Gas)ø12.7(1/2)			(Liquid)ø9.52(3/8) (Gas)ø15.88(5/8)				
	CONNECT METHOD, STD LENGTH m (ft)		flared type, 5.0(16.4)			flared type, 5.0(16.4)				
	PIPE LENGTH RANGE m (ft)		5 ~ 75 (16.4 ~ 246.1)						~	~
	I/D&O/D HEIGHT DIFFERENCE m (ft)		15 (OD located lower) / 30 (OD located higher) (49.2/98.4)							
	ADD GAS AMOUNT g/m (oz/ft)		50 (0.538)							
	PIPE LENGTH FOR ADDITIONAL GAS m (ft)		20 (65.6)							

*1: In case it is necessary to indicate the air flow volume in (l/s), the value in (m^3/min.) shall be multiplied by 16.7 and rounded down the decimal point.
*2: If the EUROVENT Certified models can be operated under the extra-low temperature condition, -7°C dry bulb and -8°C wet-bulb temperatures with rated voltage 230 V shall be used.
*3: Network Impedance shall be applicable for EUROPE and CHINA models.
*4: The annual consumption is calculated by multiplying the input power at 230 V (400 V) by an average of 500 hours per year in cooling mode.
*5: EER and COP classification is at 230 V (400 V) only in accordance with EU directive 2002/31/EC.
*6: SEER and SCOP classification is at 230V(400V) only in accordance with EN-14825. For heating, SCOP indicates the value of only Average heating season, Other fiche data indicates in an attached sheet.

Simultaneous (Double-Twin) -Type

1-1. Unit Speci□cations

PE1

4. Low Silhouette Ducted Type S-36PF1E5A×4 / U-125PE1E8A

INDOOR		MODEL	S-36PF1E5A×4							
OUTDOOR		MODEL				U-125PE1E8A				
Branch pipe		MODEL	CZ-P155BK1×3							
PERFORMANCE TEST CONDITION			ISO13253 / EN14511 / EN12102							
POWER SUPPLY		ø, Hz	1ø 50Hz			3ø 50Hz				
		V	220	230	240	380	400	415	Min	Max
COOLING	CAPACITY	kW	12.5	12.5	12.5				3.3	14.0
		BTU/h	42700	42700	42700				11300	47800
	CURRENT	A	0.6×4	0.57×4	0.56×4	5.52	5.29	5.12	-	-
	INPUT POWER	W	70×4	70×4	70×4	3.355k	3.355k	3.355k	-	-
		TOTAL W		-		3.635k	3.635k	3.635k	840	4.600k
	ANNUAL CONSUMPTION	TOTAL kWh ※4		-		-	1817.5	-	-	-
	EER/EER CLASS	TOTAL(W/W)※5/("A"~"G")	-	-	-	3.44	3.44 / A	3.44	3.93	3.04
	Erp ※6 Pdsign	kW	-	-	-	-	-	-		
	Erp ※6 SEER	(W/W)	-	-	-	-	-	-		
	Erp ※6 Annual consumption	kWh	-	-	-	-	-	-		
	Erp ※6 Class		-	-	-	-	-	-		
	POWER FACTOR	%	-	-	-	92	92	91	-	-
	NOISE INDOOR (H/M/L)	dB-A		33/29/25						
		Power Level dB		55/51/47						
	NOISE OUTDOOR (H/L)	dB-A					53/-			
		Power Level dB					70/-			
HEATING	CAPACITY	kW	14.0	14.0	14.0				4.1	16.0
		BTU/h	47800	47800	47800				14000	54600
	CURRENT	A	0.6×4	0.57×4	0.56×4	5.44	5.26	5.05	-	-
	INPUT POWER	W	70×4	70×4	70×4	3.270k	3.270k	3.270k	-	-
		TOTAL W		-		3.550k	3.550k	3.550k	900	5.200k
	COP/COP CLASS	TOTAL(W/W)※5/("A"~"G")	-	-	-	3.94	3.94 / A	3.94	4.56	3.08
	Erp ※6 Pdsign	kW	-	-	-	-	-	-		
	Erp ※6 Tbivalen	°C	-	-	-	-	-	-		
	Erp ※6 SCOP	(W/W)	-	-	-	-	-	-		
	Erp ※6 Annual consumption	kWh	-	-	-	-	-	-		
	Erp ※6 Class		-	-	-	-	-	-		
	POWER FACTOR	%	-	-	-	91	90	90	-	-
	NOISE INDOOR (H/M/L)	dB-A		33/29/25			-		/	/
		Power Level dB		55/51/47			-			
	NOISE OUTDOOR (H/L)	dB-A		-			53/-		/	/
		Power Level dB		-			70/-			
EXTRA LOW TEMP	Total CAPACITY(kW)/INPUT POWER(W)/COP					-				
MAX CURRENT(A)/MAX INPUT POWER(W)			0.86×4/105×4	0.82×4/105×4	0.79×4/105×4	10.0/6.200k	10.0/6.500k	10.0/6.750k	/	
STARTING CURRENT(A)/COMP OUTPUT(W)			-	-	-	5.52/3.0k	5.29/3.0k	5.12/3.0k	/	
NETWORK IMPEDANCE (ΩMAX.)				-			-			
FM OUTPUT (W)				120			90x2		/	
MOISTURE REMOVAL VOLUME		L/h(Pt/h)	7.9	(1.98×4)	(16.6)		-			
External static pressure		Pa		70 (MIN10 - MAX150)						
I/D AIR FLOW	COOL	m^3/min (ft^3/min)		[14/13/10 (494/459/353)]×4						
	HEAT	m^3/min (ft^3/min)		[14/13/10 (494/459/353)]×4						
O/D AIR FLOW	COOL	m^3/min (ft^3/min)					130	(4591)		
	HEAT	m^3/min (ft^3/min)					110	(3885)		
REFRIGERANT TYPE, AMOUNT g(oz)						R410A	3.40k	(119.9)	/	
PROD DIM	HEIGHT : H mm(inch)			290 (11-13/32)			1416 (55-3/4)		/	
	WIDTH : W mm(inch)			800 (31-1/2)			940 (37-1/32)		/	
	DEPTH : D mm(inch)			700 (27-9/16)			340 (13-13/32)		/	
PACK DIM	HEIGHT : H mm			355			1556		/	
	WIDTH : W mm			1014			1055		/	
	DEPTH : D mm			850			485		/	
MASS	(NET) kg(lb)			28 (62)			98 (216)		/	
	(GROSS) kg(lb)			35 (78)			108 (238)		/	
LAYERS LIMIT (actually)				9 (10)			1 (2)			
Operation Condition		Cool O.D(DBT)		18°C ~ 32°C			-15°C ~ 46°C			
		Heat O.D(DBT)		16°C ~ 30°C			-20°C ~ 24°C			
PIPING	PIPE DIAMETER mm (inch)			(Liquid)ø6.35(1/4) (Gas)ø12.7(1/2)			(Liquid)ø9.52(3/8) (Gas)ø15.88(5/8)			
	CONNECT METHOD, STD LENGTH m (ft)			flared type, 5.0(16.4)			flared type, 5.0(16.4)			
	PIPE LENGTH RANGE m (ft)			5 ~ 75 (16.4 ~ 246.1)					~	~
	I/D&O/D HEIGHT DIFFERENCE m (ft)			15 (OD located lower) / 30 (OD located higher) (49.2/98.4)						
	ADD GAS AMOUNT g/m (oz/ft)			50 (0.538)						
	PIPE LENGTH FOR ADDITIONAL GAS m (ft)			20 (65.6)						

*1: In case it is necessary to indicate the air □ow volume in (l/s), the value in (m^3/min.) shall be multiplied by 16.7 and rounded down the decimal point.
*2: If the EUROVENT Certi□ed models can be operated under the □extra-low□temperature condition, -7□C dry bulb and -8□C wet-bulb temperatures with rated voltage 230 V shall be used.
*3: Network Impedance shall be applicable for EUROPE and CHINA models.
*4: The annual consumption is calculated by multiplying the input power at 230 V (400 V) by an average of 500 hours per year in cooling mode.
*5: EER and COP classification is at 230 V (400 V) only in accordance with EU directive 2002/31/EC.
*6: SEER and SCOP classification is at 230V(400V) only in accordance with EN-14825. For heating, SCOP indicates the value of only Average heating season, Other fiche data indicates in an attached sheet.

Simultaneous (Triple) -Type

1-1. Unit Speci□cations

PE1

4. Low Silhouette Ducted Type S-45PF1E5A×3 / U-125PE1E8A

INDOOR		MODEL	S-45PF1E5A×3							
OUTDOOR		MODEL				U-125PE1E8A				
Branch pipe		MODEL	CZ-P3HPC2							
PERFORMANCE TEST CONDITION			ISO13253 / EN14511 / EN12102							
POWER SUPPLY		ø, Hz	1ø 50Hz			3ø 50Hz				
		V	220	230	240	380	400	415	Min	Max
COOLING	CAPACITY	kW	12.5	12.5	12.5				3.3	14.0
		BTU/h	42700	42700	42700				11300	47800
	CURRENT	A	0.60×3	0.57×3	0.56×3	5.52	5.29	5.12	-	-
	INPUT POWER	W	70×3	70×3	70×3	3.360k	3.360k	3.360k	-	-
		TOTAL W		-		3.570k	3.570k	3.570k	840	4.600k
	ANNUAL CONSUMPTION	TOTAL kWh ※4		-		-	1785	-	-	-
	EER/EER CLASS	TOTAL(W/W)※5/("A"~"G")	-	-	-	3.50	3.50 / A	3.50	3.93	3.04
	Erp ※6 Pdsign	kW	-	-	-	-	-	-		
	Erp ※6 SEER	(W/W)	-	-	-	-	-	-		
	Erp ※6 Annual consumption	kWh	-	-	-	-	-	-		
	Erp ※6 Class		-	-	-	-	-	-		
	POWER FACTOR	%	-	-	-	92	92	91	-	-
	NOISE INDOOR (H/M/L)	dB-A		34/30/26						
		Power Level dB		56/52/48						
	NOISE OUTDOOR (H/L)	dB-A					53/-			
		Power Level dB					70/-			
HEATING	CAPACITY	kW	14.0	14.0	14.0				4.1	16.0
		BTU/h	47800	47800	47800				14000	54600
	CURRENT	A	0.60×3	0.57×3	0.56×3	5.44	5.26	5.05	-	-
	INPUT POWER	W	70×3	70×3	70×3	3.270k	3.270k	3.270k	-	-
		TOTAL W		-		3.480k	3.480k	3.480k	900	5.200k
	COP/COP CLASS	TOTAL(W/W)※5/("A"~"G")	-	-	-	4.02	4.02 / A	4.02	4.56	3.08
	Erp ※6 Pdsign	kW	-	-	-	-	-	-		
	Erp ※6 Tbivalen	°C	-	-	-	-	-	-		
	Erp ※6 SCOP	(W/W)	-	-	-	-	-	-		
	Erp ※6 Annual consumption	kWh	-	-	-	-	-	-		
	Erp ※6 Class		-	-	-	-	-	-		
	POWER FACTOR	%	-	-	-	91	90	90	-	-
	NOISE INDOOR (H/M/L)	dB-A		34/30/26			-		/	/
		Power Level dB		56/52/48			-			
	NOISE OUTDOOR (H/L)	dB-A		-			53/-		/	/
		Power Level dB		-			70/-			
EXTRA LOW TEMP	Total CAPACITY(kW)/INPUT POWER(W)/COP					-				
MAX CURRENT(A)/MAX INPUT POWER(W)			0.86×3/105×3	0.82×3/105×3	0.79×3/105×3	10.0/6.200k	10.0/6.500k	10.0/6.750k	/	
STARTING CURRENT(A)/COMP OUTPUT(W)			-	-	-	5.52/3.0k	5.29/3.0k	5.12/3.0k	/	
NETWORK IMPEDANCE (ΩMAX.)				-			-			
FM OUTPUT (W)				120			90x2		/	
MOISTURE REMOVAL VOLUME		L/h(Pt/h)	7.9	(2.63×3)	(16.6)		-			
External static pressure		Pa	70 (MIN10 - MAX150)							
I/D AIR FLOW	COOL	m^3/min (ft^3/min)	[14/13/10 (494/459/353)]×3							
	HEAT	m^3/min (ft^3/min)	[14/13/10 (494/459/353)]×3							
O/D AIR FLOW	COOL	m^3/min (ft^3/min)				130		(4591)		
	HEAT	m^3/min (ft^3/min)				110		(3885)		
REFRIGERANT TYPE, AMOUNT g(oz)						R410A	3.40k	(119.9)	/	
PROD IM	HEIGHT : H mm(inch)		290 (11-13/32)			1416 (55-3/4)			/	
	WIDTH : W mm(inch)		800 (31-1/2)			940 (37-1/32)			/	
	DEPTH : D mm(inch)		700 (27-9/16)			340 (13-13/32)			/	
PACK IM	HEIGHT : H mm		355			1556			/	
	WIDTH : W mm		1014			1055			/	
	DEPTH : D mm		850			485			/	
MASS	(NET) kg(lb)		28 (62)			98 (216)			/	
	(GROSS) kg(lb)		35 (78)			108 (238)			/	
LAYERS LIMIT (actually)			9 (10)			1 (2)				
Operation Condition		Cool O.D(DBT)	18°C ~ 32°C			-15°C ~ 46°C				
		Heat O.D(DBT)	16°C ~ 30°C			-20°C ~ 24°C				
PIPING	PIPE DIAMETER mm (inch)		(Liquid)ø6.35(1/4) (Gas)ø12.7(1/2)			(Liquid)ø9.52(3/8) (Gas)ø15.88(5/8)				
	CONNECT METHOD, STD LENGTH m (ft)		flared type, 5.0(16.4)			flared type, 5.0(16.4)				
	PIPE LENGTH RANGE m (ft)		5 ~ 75 (16.4 ~ 246.1)						~	~
	I/D&O/D HEIGHT DIFFERENCE m (ft)		15 (OD located lower) / 30 (OD located higher) (49.2/98.4)							
	ADD GAS AMOUNT g/m (oz/ft)		50 (0.538)							
	PIPE LENGTH FOR ADDITIONAL GAS m (ft)		20 (65.6)							

*1: In case it is necessary to indicate the air □ow volume in (l/s), the value in (m^3/min.) shall be multiplied by 16.7 and rounded down the decimal point.
*2: If the EUROVENT Certi□ed models can be operated under the □extra-low□temperature condition, -7□C dry bulb and -8□C wet-bulb temperatures with rated voltage 230 V shall be used.
*3: Network Impedance shall be applicable for EUROPE and CHINA models.
*4: The annual consumption is calculated by multiplying the input power at 230 V (400 V) by an average of 500 hours per year in cooling mode.
*5: EER and COP classification is at 230 V (400 V) only in accordance with EU directive 2002/31/EC.
*6: SEER and SCOP classification is at 230V(400V) only in accordance with EN-14825. For heating, SCOP indicates the value of only Average heating season, Other fiche data indicates in an attached sheet.

Simultaneous (Twin) -Type

1-1. Unit Speci□cations

PE1

4. Low Silhouette Ducted Type S-50PF1E5A×2 / U-100PE1E8A

INDOOR		MODEL	S-50PF1E5A×2							
OUTDOOR		MODEL				U-100PE1E8A				
Branch pipe		MODEL	CZ-P155BK1							
PERFORMANCE TEST CONDITION			ISO13253 / EN14511 / EN14825 / EN12102							
POWER SUPPLY		ø, Hz	1ø 50Hz			3ø 50Hz				
		V	220	230	240	380	400	415	Min	Max
COOLING	CAPACITY	kW	10.0	10.0	10.0				3.3	12.5
		BTU/h	34100	34100	34100				11300	42700
	CURRENT	A	0.77×2	0.74×2	0.71×2	3.68	3.53	3.43	-	-
	INPUT POWER	W	100×2	100×2	100×2	2.245k	2.245k	2.245k	-	-
		TOTAL W		-		2.445k	2.445k	2.445k	840	3.700k
	ANNUAL CONSUMPTION	TOTAL kWh ※4		-		-	1222.5	-	-	-
	EER/EER CLASS	TOTAL(W/W)※5/("A"~"G")	-	-	-	4.09	4.09 / A	4.09	3.93	3.38
	Erp ※6 Pdsign	kW	-	-	-	-	10.0	-		
	Erp ※6 SEER	(W/W)	-	-	-	-	5.7	-		
	Erp ※6 Annual consumption	kWh	-	-	-	-	614	-		
	Erp ※6 Class		-	-	-	-	A+	-		
	POWER FACTOR	%	-	-	-	93	92	91	-	-
	NOISE INDOOR (H/M/L)	dB-A		34/30/26						
		Power Level dB		56/52/48						
	NOISE OUTDOOR (H/L)	dB-A					52/-			
		Power Level dB					69/-			
HEATING	CAPACITY	kW	11.2	11.2	11.2				4.1	14.0
		BTU/h	38200	38200	38200				14000	47800
	CURRENT	A	0.77×2	0.74×2	0.71×2	3.86	3.70	3.58	-	-
	INPUT POWER	W	100×2	100×2	100×2	2.400k	2.400k	2.400k	-	-
		TOTAL W		-		2.600k	2.600k	2.600k	900	4.400k
	COP/COP CLASS	TOTAL(W/W)※5/("A"~"G")	-	-	-	4.31	4.31 / A	4.31	4.56	3.18
	Erp ※6 Pdsign	kW	-	-	-	-	10.0	-		
	Erp ※6 Tbivalen	°C	-	-	-	-	-10	-		
	Erp ※6 SCOP	(W/W)	-	-	-	-	3.8	-		
	Erp ※6 Annual consumption	kWh	-	-	-	-	3684	-		
	Erp ※6 Class		-	-	-	-	A	-		
	POWER FACTOR	%	-	-	-	94	94	93	-	-
	NOISE INDOOR (H/M/L)	dB-A		34/30/26			-		/	/
		Power Level dB		56/52/48			-			
	NOISE OUTDOOR (H/L)	dB-A		-			52/-		/	/
		Power Level dB		-			69/-			
EXTRA LOW TEMP	Total CAPACITY(kW)/INPUT POWER(W)/COP					-				
MAX CURRENT(A)/MAX INPUT POWER(W)			1.00×2/125×2	0.96×2/125×2	0.92×2/125×2	9.0/5.550k	9.0/5.850k	9.0/6.100k	/	
STARTING CURRENT(A)/COMP OUTPUT(W)			-	-	-	3.86/3.0k	3.70/3.0k	3.58/3.0k	/	
NETWORK IMPEDANCE (ΩMAX.)				-			-			
FM OUTPUT (W)				120			90x2		/	
MOISTURE REMOVAL VOLUME		L/h(Pt/h)	6.0	(3.0×2)	(12.6)		-			
External static pressure		Pa		70 (MIN10 - MAX150)						
I/D AIR FLOW	COOL	m^3/min (ft^3/min)		[16/15/12 (565/530/424)]×2						
	HEAT	m^3/min (ft^3/min)		[16/15/12 (565/530/424)]×2						
O/D AIR FLOW	COOL	m^3/min (ft^3/min)				110		(3885)		
	HEAT	m^3/min (ft^3/min)				95		(3355)		
REFRIGERANT TYPE, AMOUNT g(oz)						R410A	3.40k	(119.9)	/	
PROD. DIM	HEIGHT : H mm(inch)			290 (11-13/32)			1416 (55-3/4)		/	
	WIDTH : W mm(inch)			800 (31-1/2)			940 (37-1/32)		/	
	DEPTH : D mm(inch)			700 (27-9/16)			340 (13-13/32)		/	
PACK. DIM	HEIGHT : H mm			355			1556		/	
	WIDTH : W mm			1014			1055		/	
	DEPTH : D mm			850			485		/	
MASS	(NET) kg(lb)			28 (62)			98 (216)		/	
	(GROSS) kg(lb)			35 (78)			108 (238)		/	
LAYERS LIMIT (actually)				9 (10)			1 (2)			
Operation Condition		Cool O.D(DBT)		18°C ~ 32°C			-15°C ~ 46°C			
		Heat O.D(DBT)		16°C ~ 30°C			-20°C ~ 24°C			
PIPING	PIPE DIAMETER mm (inch)		(Liquid)ø6.35(1/4) (Gas)ø12.7(1/2)			(Liquid)ø9.52(3/8) (Gas)ø15.88(5/8)				
	CONNECT METHOD, STD LENGTH m (ft)		flared type, 5.0(16.4)			flared type, 5.0(16.4)				
	PIPE LENGTH RANGE m (ft)			5 ~ 75 (16.4 ~ 246.1)					~	~
	I/D&O/D HEIGHT DIFFERENCE m (ft)		15 (OD located lower) / 30 (OD located higher) (49.2/98.4)							
	ADD GAS AMOUNT g/m (oz/ft)			50 (0.538)						
	PIPE LENGTH FOR ADDITIONAL GAS m (ft)			30 (98.4)						

*1: In case it is necessary to indicate the air □ow volume in (l/s), the value in (m^3/min.) shall be multiplied by 16.7 and rounded down the decimal point.
*2: If the EUROVENT Certi□ed models can be operated under the □extra-low□temperature condition, -7□C dry bulb and -8□C wet-bulb temperatures with rated voltage 230 V shall be used.
*3: Network Impedance shall be applicable for EUROPE and CHINA models.
*4: The annual consumption is calculated by multiplying the input power at 230 V (400 V) by an average of 500 hours per year in cooling mode.
*5: EER and COP classification is at 230 V (400 V) only in accordance with EU directive 2002/31/EC.
*6: SEER and SCOP classification is at 230V(400V) only in accordance with EN-14825. For heating, SCOP indicates the value of only Average heating season, Other fiche data indicates in an attached sheet.

Simultaneous (Triple) -Type

1-1. Unit Speci□cations

PE1

4. Low Silhouette Ducted Type S-50PF1E5A×3 / U-140PE1E8A

INDOOR		MODEL	S-50PF1E5A×3							
OUTDOOR		MODEL				U-140PE1E8A				
Branch pipe		MODEL	CZ-P3HPC2							
PERFORMANCE TEST CONDITION			ISO13253 / EN14511 / EN12102							
POWER SUPPLY		ø, Hz	1ø 50Hz			3ø 50Hz				
		V	220	230	240	380	400	415	Min	Max
COOLING	CAPACITY	kW	14.0	14.0	14.0				3.3	15.5
		BTU/h	47800	47800	47800				11300	52900
	CURRENT	A	0.77×3	0.74×3	0.71×3	6.69	6.42	6.18	-	-
	INPUT POWER	W	100×3	100×3	100×3	4.085k	4.085k	4.085k	-	-
		TOTAL W		-		4.385k	4.385k	4.385k	840	6.000k
	ANNUAL CONSUMPTION	TOTAL kWh ※4		-		-	2192.5	-	-	-
	EER/EER CLASS	TOTAL(W/W)※5/("A"~"G")	-	-	-	3.19	3.19 / B	3.19	3.93	2.58
	Erp ※6 Pdsign	kW	-	-	-	-	-	-		
	Erp ※6 SEER	(W/W)	-	-	-	-	-	-		
	Erp ※6 Annual consumption	kWh	-	-	-	-	-	-		
	Erp ※6 Class		-	-	-	-	-	-		
	POWER FACTOR	%	-	-	-	93	92	92	-	-
	NOISE INDOOR (H/M/L)	dB-A		34/30/26						
		Power Level dB		56/52/48						
	NOISE OUTDOOR (H/L)	dB-A					54/-			
		Power Level dB					71/-			
HEATING	CAPACITY	kW	16.0	16.0	16.0				4.1	18.0
		BTU/h	54600	54600	54600				14000	61400
	CURRENT	A	0.77×3	0.74×3	0.71×3	6.64	6.35	6.15	-	-
	INPUT POWER	W	100×3	100×3	100×3	4.215k	4.215k	4.215k	-	-
		TOTAL W		-		4.515k	4.515k	4.515k	900	5.900k
	COP/COP CLASS	TOTAL(W/W)※5/("A"~"G")	-	-	-	3.54	3.54 / B	3.54	4.56	3.05
	Erp ※6 Pdsign	kW	-	-	-	-	-	-		
	Erp ※6 Tbivalen	°C	-	-	-	-	-	-		
	Erp ※6 SCOP	(W/W)	-	-	-	-	-	-		
	Erp ※6 Annual consumption	kWh	-	-	-	-	-	-		
	Erp ※6 Class		-	-	-	-	-	-		
	POWER FACTOR	%	-	-	-	96	96	95	-	-
	NOISE INDOOR (H/M/L)	dB-A		34/30/26			-		/	/
		Power Level dB		56/52/48			-			
	NOISE OUTDOOR (H/L)	dB-A		-			55/-		/	/
		Power Level dB		-			71/-			
EXTRA LOW TEMP	Total CAPACITY(kW)/INPUT POWER(W)/COP					-				
MAX CURRENT(A)/MAX INPUT POWER(W)			1.00×3/125×3	0.96×3/125×3	0.92×3/125×3	11.0/6.800k	11.0/7.150k	11.0/7.450k	/	
STARTING CURRENT(A)/COMP OUTPUT(W)			-	-	-	6.69/3.0k	6.42/3.0k	6.18/3.0k	/	
NETWORK IMPEDANCE (ΩMAX.)				-			-			
FM OUTPUT (W)				120			90x2		/	
MOISTURE REMOVAL VOLUME		L/h(Pt/h)	9.0	(3.0×3)	(18.9)		-			
External static pressure		Pa	70 (MIN10 - MAX150)							
I/D AIR FLOW	COOL	m^3/min (ft^3/min)	[16/15/12 (565/530/424)]×3							
	HEAT	m^3/min (ft^3/min)	[16/15/12 (565/530/424)]×3							
O/D AIR FLOW	COOL	m^3/min (ft^3/min)				135		(4767)		
	HEAT	m^3/min (ft^3/min)				120		(4238)		
REFRIGERANT TYPE, AMOUNT g(oz)						R410A	3.40k	(119.9)	/	
PROD DIM	HEIGHT : H mm(inch)		290 (11-13/32)			1416 (55-3/4)			/	
	WIDTH : W mm(inch)		800 (31-1/2)			940 (37-1/32)			/	
	DEPTH : D mm(inch)		700 (27-9/16)			340 (13-13/32)			/	
PACK DIM	HEIGHT : H mm		355			1556			/	
	WIDTH : W mm		1014			1055			/	
	DEPTH : D mm		850			485			/	
MASS	(NET) kg(lb)		28 (62)			98 (216)			/	
	(GROSS) kg(lb)		35 (78)			108 (238)			/	
LAYERS LIMIT (actually)			9 (10)			1 (2)				
Operation Condition		Cool O.D(DBT)	18°C ~ 32°C			-15°C ~ 46°C				
		Heat O.D(DBT)	16°C ~ 30°C			-20°C ~ 24°C				
PIPING	PIPE DIAMETER mm (inch)		(Liquid)ø6.35(1/4) (Gas)ø12.7(1/2)			(Liquid)ø9.52(3/8) (Gas)ø15.88(5/8)				
	CONNECT METHOD, STD LENGTH m (ft)		flared type, 5.0(16.4)			flared type, 5.0(16.4)				
	PIPE LENGTH RANGE m (ft)		5 ~ 75 (16.4 ~ 246.1)						~	~
	I/D&O/D HEIGHT DIFFERENCE m (ft)		15 (OD located lower) / 30 (OD located higher) (49.2/98.4)							
	ADD GAS AMOUNT g/m (oz/ft)		50 (0.538)							
	PIPE LENGTH FOR ADDITIONAL GAS m (ft)		20 (65.6)							

*1: In case it is necessary to indicate the air □ow volume in (l/s), the value in (m^3/min.) shall be multiplied by 16.7 and rounded down the decimal point.
*2: If the EUROVENT Certi□ed models can be operated under the □extra-low□temperature condition, -7□C dry bulb and -8□C wet-bulb temperatures with rated voltage 230 V shall be used.
*3: Network Impedance shall be applicable for EUROPE and CHINA models.
*4: The annual consumption is calculated by multiplying the input power at 230 V (400 V) by an average of 500 hours per year in cooling mode.
*5: EER and COP classification is at 230 V (400 V) only in accordance with EU directive 2002/31/EC.
*6: SEER and SCOP classification is at 230V(400V) only in accordance with EN-14825. For heating, SCOP indicates the value of only Average heating season, Other fiche data indicates in an attached sheet.

Simultaneous (Twin) -Type

1-1. Unit Speci□cations

PE1

4. Low Silhouette Ducted Type S-60PF1E5A×2 / U-125PE1E8A

INDOOR		MODEL	S-60PF1E5A×2							
OUTDOOR		MODEL				U-125PE1E8A				
Branch pipe		MODEL	CZ-P155BK1							
PERFORMANCE TEST CONDITION			ISO13253 / EN14511 / EN12102							
POWER SUPPLY		ø, Hz	1ø 50Hz			3ø 50Hz				
		V	220	230	240	380	400	415	Min	Max
COOLING	CAPACITY	kW	12.5	12.5	12.5				3.3	14.0
		BTU/h	42700	42700	42700				11300	47800
	CURRENT	A	0.91×2	0.89×2	0.87×2	5.52	5.29	5.12	-	-
	INPUT POWER	W	120×2	120×2	120×2	3.355k	3.355k	3.355k	-	-
		TOTAL W		-		3.595k	3.595k	3.595k	840	4.600k
	ANNUAL CONSUMPTION	TOTAL kWh ※4		-		-	1797.5	-	-	-
	EER/EER CLASS	TOTAL(W/W)※5/("A"~"G")	-	-	-	3.48	3.48 / A	3.48	3.93	3.04
	Erp ※6 Pdsign	kW	-	-	-	-	-	-		
	Erp ※6 SEER	(W/W)	-	-	-	-	-	-		
	Erp ※6 Annual consumption	kWh	-	-	-	-	-	-		
	Erp ※6 Class		-	-	-	-	-	-		
	POWER FACTOR	%	-	-	-	92	92	91	-	-
	NOISE INDOOR (H/M/L)	dB-A		35/32/26						
		Power Level dB		57/54/48						
	NOISE OUTDOOR (H/L)	dB-A					53/-			
		Power Level dB					70/-			
HEATING	CAPACITY	kW	14.0	14.0	14.0				4.1	16.0
		BTU/h	47800	47800	47800				14000	54600
	CURRENT	A	0.91×2	0.89×2	0.87×2	5.44	5.26	5.05	-	-
	INPUT POWER	W	120×2	120×2	120×2	3.270k	3.270k	3.270k	-	-
		TOTAL W		-		3.510k	3.510k	3.510k	900	5.200k
	COP/COP CLASS	TOTAL(W/W)※5/("A"~"G")	-	-	-	3.99	3.99 / A	3.99	4.56	3.08
	Erp ※6 Pdsign	kW	-	-	-	-	-	-		
	Erp ※6 Tbivalen	°C	-	-	-	-	-	-		
	Erp ※6 SCOP	(W/W)	-	-	-	-	-	-		
	Erp ※6 Annual consumption	kWh	-	-	-	-	-	-		
	Erp ※6 Class		-	-	-	-	-	-		
	POWER FACTOR	%	-	-	-	91	90	90	-	-
	NOISE INDOOR (H/M/L)	dB-A		35/32/26			-		/	/
		Power Level dB		57/54/48			-			
	NOISE OUTDOOR (H/L)	dB-A		-			53/-		/	/
		Power Level dB		-			70/-			
EXTRA LOW TEMP	Total CAPACITY(kW)/INPUT POWER(W)/COP					-				
MAX CURRENT(A)/MAX INPUT POWER(W)			1.26×2/160×2	1.20×2/160×2	1.15×2/160×2	10.0/6.200k	10.0/6.500k	10.0/6.750k	/	
STARTING CURRENT(A)/COMP OUTPUT(W)			-	-	-	5.52/3.0k	5.29/3.0k	5.12/3.0k	/	
NETWORK IMPEDANCE (ΩMAX.)				-			-			
FM OUTPUT (W)				120			90x2		/	
MOISTURE REMOVAL VOLUME		L/h(Pt/h)	7.9	(3.95×2)	(16.6)		-			
External static pressure		Pa	70 (MIN10 - MAX150)							
I/D AIR FLOW	COOL	m^3/min (ft^3/min)	[21/19/15 (742/671/530)]×2							
	HEAT	m^3/min (ft^3/min)	[21/19/15 (742/671/530)]×2							
O/D AIR FLOW	COOL	m^3/min (ft^3/min)				130		(4591)		
	HEAT	m^3/min (ft^3/min)				110		(3885)		
REFRIGERANT TYPE, AMOUNT g(oz)						R410A	3.40k	(119.9)	/	
PROD	HEIGHT : H mm(inch)		290 (11-13/32)			1416 (55-3/4)			/	
	WIDTH : W mm(inch)		1000 (39-3/8)			940 (37-1/32)			/	
	DEPTH : D mm(inch)		700 (27-9/16)			340 (13-13/32)			/	
PACK	HEIGHT : H mm		355			1556			/	
	WIDTH : W mm		1214			1055			/	
	DEPTH : D mm		850			485			/	
MASS	(NET) kg(lb)		33 (73)			98 (216)			/	
	(GROSS) kg(lb)		41 (91)			108 (238)			/	
LAYERS LIMIT (actually)			9 (10)			1 (2)				
Operation Condition		Cool O.D(DBT)	18°C ~ 32°C			-15°C ~ 46°C				
		Heat O.D(DBT)	16°C ~ 30°C			-20°C ~ 24°C				
PIPING	PIPE DIAMETER mm (inch)		(Liquid)ø9.52(3/8) (Gas)ø15.88(5/8)			(Liquid)ø9.52(3/8) (Gas)ø15.88(5/8)				
	CONNECT METHOD, STD LENGTH m (ft)		flared type, 5.0(16.4)			flared type, 5.0(16.4)				
	PIPE LENGTH RANGE m (ft)		5 ~ 75 (16.4 ~ 246.1)						~	~
	I/D&O/D HEIGHT DIFFERENCE m (ft)		15 (OD located lower) / 30 (OD located higher) (49.2/98.4)							
	ADD GAS AMOUNT g/m (oz/ft)		50 (0.538)							
	PIPE LENGTH FOR ADDITIONAL GAS m (ft)		30 (98.4)							

*1: In case it is necessary to indicate the air □ow volume in (l/s), the value in (m^3/min.) shall be multiplied by 16.7 and rounded down the decimal point.
*2: If the EUROVENT Certi□ed models can be operated under the □extra-low□temperature condition, -7□C dry bulb and -8□C wet-bulb temperatures with rated voltage 230 V shall be used.
*3: Network Impedance shall be applicable for EUROPE and CHINA models.
*4: The annual consumption is calculated by multiplying the input power at 230 V (400 V) by an average of 500 hours per year in cooling mode.
*5: EER and COP classification is at 230 V (400 V) only in accordance with EU directive 2002/31/EC.
*6: SEER and SCOP classification is at 230V(400V) only in accordance with EN-14825. For heating, SCOP indicates the value of only Average heating season, Other fiche data indicates in an attached sheet.

Single -Type

1-1. Unit Specifications

PE1

4. Low Silhouette Ducted Type S-71PF1E5A / U-71PE1E8A

INDOOR		MODEL	S-71PF1E5A							
OUTDOOR		MODEL				U-71PE1E8A				
Branch pipe		MODEL	-							
PERFORMANCE TEST CONDITION			ISO13253 / EN14511 / EN14825 / EN12102							
POWER SUPPLY		ø, Hz	1ø 50Hz			3ø 50Hz				
		V	220	230	240	380	400	415	Min	Max
COOLING	CAPACITY	kW	7.10	7.10	7.10				3.2	8.0
		BTU/h	24200	24200	24200				10900	27300
	CURRENT	A	0.91	0.89	0.87	2.75	2.65	2.60	-	-
	INPUT POWER	W	120	120	120	1.730k	1.730k	1.730k	-	-
		TOTAL W		-		1.850k	1.850k	1.850k	640	2.650k
	ANNUAL CONSUMPTION	TOTAL kWh ※4		-		-	925	-	-	-
	EER/EER CLASS	TOTAL(W/W)※5("A"~"G")	-	-	-	3.84 / A	3.84 / A	3.84 / A	5.00	3.02
	Erp ※6 Pdsign	kW	-	-	-	-	7.1	-		
	Erp ※6 SEER	(W/W)	-	-	-	-	6.0	-		
	Erp ※6 Annual consumption	kWh	-	-	-	-	414	-		
	Erp ※6 Class		-	-	-	-	A+	-		
	POWER FACTOR	%	-	-	-	96	94	93	-	-
	NOISE INDOOR (H/M/L)	dB-A		35/32/26			-			
		Power Level dB		57/54/48			-			
	NOISE OUTDOOR (H/L)	dB-A					48/-			
		Power Level dB					65/-			
HEATING	CAPACITY	kW	8.00	8.00	8.00				2.8	9.0
		BTU/h	27300	27300	27300				9600	30700
	CURRENT	A	0.91	0.89	0.87	3.10	3.00	2.90	-	-
	INPUT POWER	W	120	120	120	1.960k	1.960k	1.960k	-	-
		TOTAL W		-		2.080k	2.080k	2.080k	580	2.900k
	COP/COP CLASS	TOTAL(W/W)※5("A"~"G")	-	-	-	3.85 / A	3.85 / A	3.85 / A	4.83	3.10
	Erp ※6 Pdsign	kW	-	-	-	-	7.1	-		
	Erp ※6 Tbivalen	°C	-	-	-	-	-9	-		
	Erp ※6 SCOP	(W/W)	-	-	-	-	3.9	-		
	Erp ※6 Annual consumption	kWh	-	-	-	-	2548	-		
	Erp ※6 Class		-	-	-	-	A	-		
	POWER FACTOR	%	-	-	-	96	94	94	-	-
	NOISE INDOOR (H/M/L)	dB-A		35/32/26			-		/	/
		Power Level dB		57/54/48			-			
	NOISE OUTDOOR (H/L)	dB-A		-			50/-		/	/
		Power Level dB		-			67/-			
EXTRA LOW TEMP	Total CAPACITY(kW)/INPUT POWER(W)/COP		-							
MAX CURRENT(A)/MAX INPUT POWER(W)			1.26/160	1.20/160	1.15/160	7.0/4.150k	7.0/4.360k	7.0/4.530k	/	
STARTING CURRENT(A)/COMP OUTPUT(W)			-	-	-	3.10/2.0k	3.00/2.0k	2.90/2.0k	/	
NETWORK IMPEDANCE (ΩMAX.)				-			-			
FM OUTPUT (W)				120			90		/	
MOISTURE REMOVAL VOLUME		L/h(Pt/h)	4.2		(8.8)		-			
External static pressure		Pa	70 (MIN10 - MAX150)							
I/D AIR FLOW	COOL	m^3/min (ft^3/min)	21/19/15 (742/671/530)							
	HEAT	m^3/min (ft^3/min)	21/19/15 (742/671/530)							
O/D AIR FLOW	COOL	m^3/min (ft^3/min)				60		(2119)		
	HEAT	m^3/min (ft^3/min)				60		(2119)		
REFRIGERANT TYPE, AMOUNT g(oz)						R410A	2.35k	(82.9)	/	
PROD DIM	HEIGHT : H mm(inch)		290 (11-13/32)			996 (39-7/32)			/	
	WIDTH : W mm(inch)		1000 (39-3/8)			940 (37-1/32)			/	
	DEPTH : D mm(inch)		700 (27-9/16)			340 (13-13/32)			/	
PACK DIM	HEIGHT : H mm		355			1136			/	
	WIDTH : W mm		1214			1055			/	
	DEPTH : D mm		850			485			/	
MASS	(NET) kg(lb)		33 (73)			71 (157)			/	
	(GROSS) kg(lb)		41 (91)			79 (174)			/	
LAYERS LIMIT (actually)			9 (10)			2 (3)				
Operation Condition		Cool O.D(DBT)	18°C ~ 32°C			-15°C ~ 46°C				
		Heat O.D(DBT)	16°C ~ 30°C			-20°C ~ 24°C				
PIPING	PIPE DIAMETER mm (inch)		(Liquid)ø9.52(3/8) (Gas)ø15.88(5/8)			(Liquid)ø9.52(3/8) (Gas)ø15.88(5/8)				
	CONNECT METHOD, STD LENGTH m (ft)		flared type, 5.0(16.4)			flared type, 5.0(16.4)				
	PIPE LENGTH RANGE m (ft)		5 ~ 50 (16.4 ~ 164.0)						~	~
	I/D&O/D HEIGHT DIFFERENCE m (ft)		15 (OD located lower) / 30 (OD located higher) (49.2/98.4)							
	ADD GAS AMOUNT g/m (oz/ft)		50 (0.538)							
	PIPE LENGTH FOR ADDITIONAL GAS m (ft)		30 (98.4)							

*1: In case it is necessary to indicate the air flow volume in (l/s), the value in (m^3/min.) shall be multiplied by 16.7 and rounded down the decimal point.
*2: If the EUROVENT Certified models can be operated under the extra-low temperature condition, -7°C dry bulb and -8°C wet-bulb temperatures with rated voltage 230 V shall be used.
*3: Network Impedance shall be applicable for EUROPE and CHINA models.
*4: The annual consumption is calculated by multiplying the input power at 230 V (400 V) by an average of 500 hours per year in cooling mode.
*5: EER and COP classification is at 230 V (400 V) only in accordance with EU directive 2002/31/EC.
*6: SEER and SCOP classification is at 230V(400V) only in accordance with EN-14825. For heating, SCOP indicates the value of only Average heating season, Other fiche data indicates in an attached sheet.

Simultaneous (Twin) -Type

1-1. Unit Speci□cations

PE1

4. Low Silhouette Ducted Type S-71PF1E5A×2 / U-140PE1E8A

INDOOR		MODEL	S-71PF1E5A×2							
OUTDOOR		MODEL				U-140PE1E8A				
Branch pipe		MODEL	CZ-P155BK1							
PERFORMANCE TEST CONDITION			ISO13253 / EN14511 / EN12102							
POWER SUPPLY		ø, Hz	1ø 50Hz			3ø 50Hz				
		V	220	230	240	380	400	415	Min	Max
COOLING	CAPACITY	kW	14.0	14.0	14.0				3.3	15.5
		BTU/h	47800	47800	47800				11300	52900
	CURRENT	A	0.91×2	0.89×2	0.87×2	6.69	6.42	6.18	-	-
	INPUT POWER	W	120×2	120×2	120×2	4.085k	4.085k	4.085k	-	-
		TOTAL W		-		4.325k	4.325k	4.325k	840	6.000k
	ANNUAL CONSUMPTION	TOTAL kWh ※4		-		-	2162.5	-	-	-
	EER/EER CLASS	TOTAL(W/W)※5/("A"~"G")	-	-	-	3.24	3.24 / A	3.24	3.93	2.58
	Erp ※6 Pdsign	kW	-	-	-	-	-	-		
	Erp ※6 SEER	(W/W)	-	-	-	-	-	-		
	Erp ※6 Annual consumption	kWh	-	-	-	-	-	-		
	Erp ※6 Class		-	-	-	-	-	-		
	POWER FACTOR	%	-	-	-	93	92	92	-	-
	NOISE INDOOR (H/M/L)	dB-A		35/32/26						
		Power Level dB		57/54/48						
	NOISE OUTDOOR (H/L)	dB-A					54/-			
		Power Level dB					71/-			
HEATING	CAPACITY	kW	16.0	16.0	16.0				4.1	18.0
		BTU/h	54600	54600	54600				14000	61400
	CURRENT	A	0.91×2	0.89×2	0.87×2	6.64	6.35	6.15	-	-
	INPUT POWER	W	120×2	120×2	120×2	4.215k	4.215k	4.215k	-	-
		TOTAL W		-		4.455k	4.455k	4.455k	900	5.900k
	COP/COP CLASS	TOTAL(W/W)※5/("A"~"G")	-	-	-	3.59	3.59 / A	3.59	4.56	3.05
	Erp ※6 Pdsign	kW	-	-	-	-	-	-		
	Erp ※6 Tbivalen	°C	-	-	-	-	-	-		
	Erp ※6 SCOP	(W/W)	-	-	-	-	-	-		
	Erp ※6 Annual consumption	kWh	-	-	-	-	-	-		
	Erp ※6 Class		-	-	-	-	-	-		
	POWER FACTOR	%	-	-	-	96	96	95	-	-
	NOISE INDOOR (H/M/L)	dB-A		35/32/26			-		/	/
		Power Level dB		57/54/48			-			
	NOISE OUTDOOR (H/L)	dB-A		-			55/-		/	/
		Power Level dB		-			71/-			
EXTRA LOW TEMP	Total CAPACITY(kW)/INPUT POWER(W)/COP					-				
MAX CURRENT(A)/MAX INPUT POWER(W)			1.26×2/160×2	1.20×2/160×2	1.15×2/160×2	11.0/6.800k	11.0/7.150k	11.0/7.450k	/	
STARTING CURRENT(A)/COMP OUTPUT(W)			-	-	-	6.69/3.0k	6.42/3.0k	6.18/3.0k	/	
NETWORK IMPEDANCE (ΩMAX.)				-			-			
FM OUTPUT (W)				120			90x2		/	
MOISTURE REMOVAL VOLUME		L/h(Pt/h)	9.0	(4.5×2)	(18.9)		-			
External static pressure		Pa		70 (MIN10 - MAX150)						
I/D AIR FLOW	COOL	m^3/min (ft^3/min)		[21/19/15 (742/671/530)]×2						
	HEAT	m^3/min (ft^3/min)		[21/19/15 (742/671/530)]×2						
O/D AIR FLOW	COOL	m^3/min (ft^3/min)					135	(4767)		
	HEAT	m^3/min (ft^3/min)					120	(4238)		
REFRIGERANT TYPE, AMOUNT g(oz)						R410A	3.40k	(119.9)	/	
PROD IM	HEIGHT : H mm(inch)			290 (11-13/32)			1416 (55-3/4)		/	
	WIDTH : W mm(inch)			1000 (39-3/8)			940 (37-1/32)		/	
	DEPTH : D mm(inch)			700 (27-9/16)			340 (13-13/32)		/	
PACK IM	HEIGHT : H mm			355			1556		/	
	WIDTH : W mm			1214			1055		/	
	DEPTH : D mm			850			485		/	
MASS	(NET) kg(lb)			33 (73)			98 (216)		/	
	(GROSS) kg(lb)			41 (91)			108 (238)		/	
LAYERS LIMIT (actually)				9 (10)			1 (2)			
Operation Condition		Cool O.D(DBT)		18°C ~ 32°C			-15°C ~ 46°C			
		Heat O.D(DBT)		16°C ~ 30°C			-20°C ~ 24°C			
PIPING	PIPE DIAMETER mm (inch)		(Liquid)ø9.52(3/8) (Gas)ø15.88(5/8)			(Liquid)ø9.52(3/8) (Gas)ø15.88(5/8)				
	CONNECT METHOD, STD LENGTH m (ft)		flared type, 5.0(16.4)			flared type, 5.0(16.4)				
	PIPE LENGTH RANGE m (ft)			5 ~ 75 (16.4 ~ 246.1)					~	~
	I/D&O/D HEIGHT DIFFERENCE m (ft)		15 (OD located lower) / 30 (OD located higher) (49.2/98.4)							
	ADD GAS AMOUNT g/m (oz/ft)			50 (0.538)						
	PIPE LENGTH FOR ADDITIONAL GAS m (ft)			30 (98.4)						

*1: In case it is necessary to indicate the air □ow volume in (l/s), the value in (m^3/min.) shall be multiplied by 16.7 and rounded down the decimal point.
*2: If the EUROVENT Certi□ed models can be operated under the □extra-low□temperature condition, -7□C dry bulb and -8□C wet-bulb temperatures with rated voltage 230 V shall be used.
*3: Network Impedance shall be applicable for EUROPE and CHINA models.
*4: The annual consumption is calculated by multiplying the input power at 230 V (400 V) by an average of 500 hours per year in cooling mode.
*5: EER and COP classification is at 230 V (400 V) only in accordance with EU directive 2002/31/EC.
*6: SEER and SCOP classification is at 230V(400V) only in accordance with EN-14825. For heating, SCOP indicates the value of only Average heating season, Other fiche data indicates in an attached sheet.

Single -Type

1-1. Unit Speci□cations

PE1

4. Low Silhouette Ducted Type S-100PF1E5A / U-100PE1E8A

INDOOR		MODEL	S-100PF1E5A							
OUTDOOR		MODEL				U-100PE1E8A				
Branch pipe		MODEL				-				
PERFORMANCE TEST CONDITION			ISO13253 / EN14511 / EN14825 / EN12102							
POWER SUPPLY		ø, Hz	1ø 50Hz			3ø 50Hz				
		V	220	230	240	380	400	415	Min	Max
COOLING	CAPACITY	kW	10.0	10.0	10.0				3.3	12.5
		BTU/h	34100	34100	34100				11300	42700
	CURRENT	A	1.35	1.30	1.27	3.68	3.53	3.43	-	-
	INPUT POWER	W	195	195	195	2.245k	2.245k	2.245k	-	-
		TOTAL W		-		2.440k	2.440k	2.440k	840	3.700k
	ANNUAL CONSUMPTION	TOTAL kWh ※4		-		-	1220	-	-	-
	EER/EER CLASS	TOTAL(W/W)※5("A"~"G")	-	-	-	4.10	4.10 / A	4.10	3.93	3.38
	Erp ※6 Pdsign	kW	-	-	-	-	10.0	-		
	Erp ※6 SEER	(W/W)	-	-	-	-	5.7	-		
	Erp ※6 Annual consumption	kWh	-	-	-	-	614	-		
	Erp ※6 Class		-	-	-	-	A+	-		
	POWER FACTOR	%	-	-	-	93	92	91	-	-
	NOISE INDOOR (H/M/L)	dB-A		38/34/31			-			
		Power Level dB		60/56/53			-			
	NOISE OUTDOOR (H/L)	dB-A					52/-			
		Power Level dB					69/-			
HEATING	CAPACITY	kW	11.2	11.2	11.2				4.1	14.0
		BTU/h	38200	38200	38200				14000	47800
	CURRENT	A	1.37	1.34	1.29	3.86	3.70	3.58	-	-
	INPUT POWER	W	200	200	200	2.400k	2.400k	2.400k	-	-
		TOTAL W		-		2.600k	2.600k	2.600k	900	4.400k
	COP/COP CLASS	TOTAL(W/W)※5("A"~"G")	-	-	-	4.31	4.31 / A	4.31	4.56	3.18
	Erp ※6 Pdsign	kW	-	-	-	-	10.0	-		
	Erp ※6 Tbivalen	°C	-	-	-	-	-10	-		
	Erp ※6 SCOP	(W/W)	-	-	-	-	3.8	-		
	Erp ※6 Annual consumption	kWh	-	-	-	-	3684	-		
	Erp ※6 Class		-	-	-	-	A	-		
	POWER FACTOR	%	-	-	-	94	94	93	-	-
	NOISE INDOOR (H/M/L)	dB-A		38/34/31			-		/	/
		Power Level dB		60/56/53			-			
	NOISE OUTDOOR (H/L)	dB-A		-			52/-		/	/
		Power Level dB		-			69/-			
EXTRA LOW TEMP	Total CAPACITY(kW)/INPUT POWER(W)/COP		(Q8.8kW/W4.200kW/COP2.10)							
MAX CURRENT(A)/MAX INPUT POWER(W)			1.80/265	1.75/265	1.70/265	9.0/5.550k	9.0/5.850k	9.0/6.100k	/	
STARTING CURRENT(A)/COMP OUTPUT(W)			-	-	-	3.86/3.0k	3.70/3.0k	3.58/3.0k	/	
NETWORK IMPEDANCE (ΩMAX.)				-			-			
FM OUTPUT (W)				200			90×2		/	
MOISTURE REMOVAL VOLUME		L/h(Pt/h)	6.0		(12.6)		-			
External static pressure		Pa	100 (MIN10 - MAX150)							
I/D AIR FLOW	COOL	m^3/min (ft^3/min)	32/26/21 (1130/918/742)							
	HEAT	m^3/min (ft^3/min)	32/26/21 (1130/918/742)							
O/D AIR FLOW	COOL	m^3/min (ft^3/min)				110		(3885)		
	HEAT	m^3/min (ft^3/min)				95		(3355)		
REFRIGERANT TYPE, AMOUNT g(oz)						R410A	3.40k	(119.9)	/	
PROD DIM	HEIGHT : H mm(inch)		290 (11-13/32)			1416 (55-3/4)			/	
	WIDTH : W mm(inch)		1400 (55-1/8)			940 (37-1/32)			/	
	DEPTH : D mm(inch)		700 (27-9/16)			340 (13-13/32)			/	
PACK DIM	HEIGHT : H mm		355			1556			/	
	WIDTH : W mm		1614			1055			/	
	DEPTH : D mm		850			485			/	
MASS	(NET) kg(lb)		45 (99)			98 (216)			/	
	(GROSS) kg(lb)		54 (119)			108 (238)			/	
LAYERS LIMIT (actually)			9 (10)			1 (2)				
Operation Condition		Cool O.D(DBT)	18°C ~ 32°C			-15°C ~ 46°C				
		Heat O.D(DBT)	16°C ~ 30°C			-20°C ~ 24°C				
PIPING	PIPE DIAMETER mm (inch)		(Liquid)ø9.52(3/8) (Gas)ø15.88(5/8)			(Liquid)ø9.52(3/8) (Gas)ø15.88(5/8)				
	CONNECT METHOD, STD LENGTH m (ft)		flared type, 5.0(16.4)			flared type, 5.0(16.4)				
	PIPE LENGTH RANGE m (ft)		5 ~ 75 (16.4 ~ 246.1)						~	~
	I/D&O/D HEIGHT DIFFERENCE m (ft)		15 (OD located lower) / 30 (OD located higher) (49.2/98.4)							
	ADD GAS AMOUNT g/m (oz/ft)		50 (0.538)							
	PIPE LENGTH FOR ADDITIONAL GAS m (ft)		30 (98.4)							

*1: In case it is necessary to indicate the air □ow volume in (l/s), the value in (m^3/min.) shall be multiplied by 16.7 and rounded down the decimal point.
*2: If the EUROVENT Certi□ed models can be operated under the □extra-low□temperature condition, -7□C dry bulb and -8□C wet-bulb temperatures with rated voltage 230 V shall be used.
*3: Network Impedance shall be applicable for EUROPE and CHINA models.
*4: The annual consumption is calculated by multiplying the input power at 230 V (400 V) by an average of 500 hours per year in cooling mode.
*5: EER and COP classification is at 230 V (400 V) only in accordance with EU directive 2002/31/EC.
*6: SEER and SCOP classification is at 230V(400V) only in accordance with EN-14825. For heating, SCOP indicates the value of only Average heating season, Other fiche data indicates in an attached sheet.

Single -Type

1-1. Unit Speci□cations

PE1

4. Low Silhouette Ducted Type S-125PF1E5A / U-125PE1E8A

INDOOR		MODEL	S-125PF1E5A							
OUTDOOR		MODEL				U-125PE1E8A				
Branch pipe		MODEL				-				
PERFORMANCE TEST CONDITION			ISO13253 / EN14511 / EN12102							
POWER SUPPLY		ø, Hz	1ø 50Hz			3ø 50Hz				
		V	220	230	240	380	400	415	Min	Max
COOLING	CAPACITY	kW	12.5	12.5	12.5				3.3	14.0
		BTU/h	42700	42700	42700				11300	47800
	CURRENT	A	1.48	1.44	1.39	5.52	5.29	5.12	-	-
	INPUT POWER	W	215	215	215	3.355k	3.355k	3.355k	-	-
		TOTAL W		-		3.570k	3.570k	3.570k	840	4.600k
	ANNUAL CONSUMPTION	TOTAL kWh ※4		-		-	1785	-	-	-
	EER/EER CLASS	TOTAL(W/W)※5("A"~"G")	-	-	-	3.50	3.50 / A	3.50	3.93	3.04
	Erp ※6 Pdsign	kW	-	-	-	-	-	-		
	Erp ※6 SEER	(W/W)	-	-	-	-	-	-		
	Erp ※6 Annual consumption	kWh	-	-	-	-	-	-		
	Erp ※6 Class		-	-	-	-	-	-		
	POWER FACTOR	%	-	-	-	92	92	91	-	-
	NOISE INDOOR (H/M/L)	dB-A		39/35/32			-			
		Power Level dB		61/57/54			-			
	NOISE OUTDOOR (H/L)	dB-A					53/-			
		Power Level dB					70/-			
HEATING	CAPACITY	kW	14.0	14.0	14.0				4.1	16.0
		BTU/h	47800	47800	47800				14000	54600
	CURRENT	A	1.46	1.42	1.38	5.44	5.26	5.05	-	-
	INPUT POWER	W	210	210	210	3.270k	3.270k	3.270k	-	-
		TOTAL W		-		3.480k	3.480k	3.480k	900	5.200k
	COP/COP CLASS	TOTAL(W/W)※5("A"~"G")	-	-	-	4.02	4.02 / A	4.02	4.56	3.08
	Erp ※6 Pdsign	kW	-	-	-	-	-	-		
	Erp ※6 Tbivalen	°C	-	-	-	-	-	-		
	Erp ※6 SCOP	(W/W)	-	-	-	-	-	-		
	Erp ※6 Annual consumption	kWh	-	-	-	-	-	-		
	Erp ※6 Class		-	-	-	-	-	-		
	POWER FACTOR	%	-	-	-	91	90	90	-	-
	NOISE INDOOR (H/M/L)	dB-A		39/35/32			-		/	/
		Power Level dB		61/57/54			-			
	NOISE OUTDOOR (H/L)	dB-A		-			53/-		/	/
		Power Level dB		-			70/-			
EXTRA LOW TEMP	Total CAPACITY(kW)/INPUT POWER(W)/COP		(Q10.5kW/W5.200kW/COP2.02)							
MAX CURRENT(A)/MAX INPUT POWER(W)			1.80/265	1.75/265	1.70/265	10.0/6.200k	10.0/6.500k	10.0/6.750k	/	
STARTING CURRENT(A)/COMP OUTPUT(W)			-	-	-	5.52/3.0k	5.29/3.0k	5.12/3.0k	/	
NETWORK IMPEDANCE (ΩMAX.)				-			-			
FM OUTPUT (W)				200			90×2		/	
MOISTURE REMOVAL VOLUME		L/h(Pt/h)	7.9		(16.6)		-			
External static pressure		Pa	100 (MIN10 - MAX150)							
I/D AIR FLOW	COOL	m^3/min (ft^3/min)	34/29/23 (1201/1024/812)							
	HEAT	m^3/min (ft^3/min)	34/29/23 (1201/1024/812)							
O/D AIR FLOW	COOL	m^3/min (ft^3/min)				130		(4591)		
	HEAT	m^3/min (ft^3/min)				110		(3885)		
REFRIGERANT TYPE, AMOUNT g(oz)						R410A	3.40k	(119.9)	/	
PROD IM	HEIGHT : H mm(inch)		290 (11-13/32)			1416 (55-3/4)			/	
	WIDTH : W mm(inch)		1400 (55-1/8)			940 (37-1/32)			/	
	DEPTH : D mm(inch)		700 (27-9/16)			340 (13-13/32)			/	
PACK IM	HEIGHT : H mm		355			1556			/	
	WIDTH : W mm		1614			1055			/	
	DEPTH : D mm		850			485			/	
MASS	(NET) kg(lb)		45 (99)			98 (216)			/	
	(GROSS) kg(lb)		54 (119)			108 (238)			/	
LAYERS LIMIT (actually)			9 (10)			1 (2)				
Operation Condition		Cool O.D(DBT)	18°C ~ 32°C			-15°C ~ 46°C				
		Heat O.D(DBT)	16°C ~ 30°C			-20°C ~ 24°C				
PIPING	PIPE DIAMETER mm (inch)		(Liquid)ø9.52(3/8) (Gas)ø15.88(5/8)			(Liquid)ø9.52(3/8) (Gas)ø15.88(5/8)				
	CONNECT METHOD, STD LENGTH m (ft)		flared type, 5.0(16.4)			flared type, 5.0(16.4)				
	PIPE LENGTH RANGE m (ft)		5 ~ 75 (16.4 ~ 246.1)						~	~
	I/D&O/D HEIGHT DIFFERENCE m (ft)		15 (OD located lower) / 30 (OD located higher) (49.2/98.4)							
	ADD GAS AMOUNT g/m (oz/ft)		50 (0.538)							
	PIPE LENGTH FOR ADDITIONAL GAS m (ft)		30 (98.4)							

*1: In case it is necessary to indicate the air □ow volume in (l/s), the value in (m^3/min.) shall be multiplied by 16.7 and rounded down the decimal point.
*2: If the EUROVENT Certi□ed models can be operated under the □extra-low□temperature condition, -7□C dry bulb and -8□C wet-bulb temperatures with rated voltage 230 V shall be used.
*3: Network Impedance shall be applicable for EUROPE and CHINA models.
*4: The annual consumption is calculated by multiplying the input power at 230 V (400 V) by an average of 500 hours per year in cooling mode.
*5: EER and COP classification is at 230 V (400 V) only in accordance with EU directive 2002/31/EC.
*6: SEER and SCOP classification is at 230V(400V) only in accordance with EN-14825. For heating, SCOP indicates the value of only Average heating season, Other fiche data indicates in an attached sheet.

Single -Type

1-1. Unit Speci□cations

PE1

4. Low Silhouette Ducted Type S-140PF1E5A / U-140PE1E8A

INDOOR		MODEL	S-140PF1E5A							
OUTDOOR		MODEL				U-140PE1E8A				
Branch pipe		MODEL				-				
PERFORMANCE TEST CONDITION			ISO13253 / EN14511 / EN12102							
POWER SUPPLY		ø, Hz	1ø 50Hz			3ø 50Hz				
		V	220	230	240	380	400	415	Min	Max
COOLING	CAPACITY	kW	14.0	14.0	14.0				3.3	15.5
		BTU/h	47800	47800	47800				11300	52900
	CURRENT	A	1.55	1.50	1.47	6.69	6.42	6.18	-	-
	INPUT POWER	W	225	225	225	4.085k	4.085k	4.085k	-	-
		TOTAL W		-		4.310k	4.310k	4.310k	840	6.000k
	ANNUAL CONSUMPTION	TOTAL kWh ※4		-		-	2155	-	-	-
	EER/EER CLASS	TOTAL(W/W)※5("A"~"G")	-	-	-	3.25	3.25 / A	3.25	3.93	2.58
	Erp ※6 Pdsign	kW	-	-	-	-	-	-		
	Erp ※6 SEER	(W/W)	-	-	-	-	-	-		
	Erp ※6 Annual consumption	kWh	-	-	-	-	-	-		
	Erp ※6 Class		-	-	-	-	-	-		
	POWER FACTOR	%	-	-	-	93	92	92	-	-
	NOISE INDOOR (H/M/L)	dB-A		40/36/33			-			
		Power Level dB		62/58/55			-			
	NOISE OUTDOOR (H/L)	dB-A					54/-			
		Power Level dB					71/-			
HEATING	CAPACITY	kW	16.0	16.0	16.0				4.1	18.0
		BTU/h	54600	54600	54600				14000	61400
	CURRENT	A	1.55	1.50	1.46	6.64	6.35	6.15	-	-
	INPUT POWER	W	225	225	225	4.215k	4.215k	4.215k	-	-
		TOTAL W		-		4.440k	4.440k	4.440k	900	5.900k
	COP/COP CLASS	TOTAL(W/W)※5("A"~"G")	-	-	-	3.60	3.60 / A	3.60	4.56	3.05
	Erp ※6 Pdsign	kW	-	-	-	-	-	-		
	Erp ※6 Tbivalen	°C	-	-	-	-	-	-		
	Erp ※6 SCOP	(W/W)	-	-	-	-	-	-		
	Erp ※6 Annual consumption	kWh	-	-	-	-	-	-		
	Erp ※6 Class		-	-	-	-	-	-		
	POWER FACTOR	%	-	-	-	96	96	95	-	-
	NOISE INDOOR (H/M/L)	dB-A		40/36/33			-		/	/
		Power Level dB		62/58/55			-			
	NOISE OUTDOOR (H/L)	dB-A		-			55/-		/	/
		Power Level dB		-			71/-			
EXTRA LOW TEMP	Total CAPACITY(kW)INPUT POWER(W)COP		(Q11.5kW/W5.800kW/COP1.98)							
MAX CURRENT(A)/MAX INPUT POWER(W)			1.91/285	1.86/285	1.81/285	11.0/6.800k	11.0/7.150k	11.0/7.450k	/	
STARTING CURRENT(A)/COMP OUTPUT(W)			-	-	-	6.69/3.0k	6.42/3.0k	6.18/3.0k	/	
NETWORK IMPEDANCE (ΩMAX.)				-			-			
FM OUTPUT (W)				200			90×2		/	
MOISTURE REMOVAL VOLUME		L/h(Pt/h)	9.0		(18.9)		-			
External static pressure		Pa	100 (MIN10 - MAX150)							
I/D AIR FLOW	COOL	m³/min (ft³/min)	36/32/25 (1271/1130/883)							
	HEAT	m³/min (ft³/min)	36/32/25 (1271/1130/883)							
O/D AIR FLOW	COOL	m³/min (ft³/min)				135		(4767)		
	HEAT	m³/min (ft³/min)				120		(4238)		
REFRIGERANT TYPE, AMOUNT g(oz)						R410A	3.40k	(119.9)	/	
PROD IM	HEIGHT : H mm(inch)		290 (11-13/32)			1416 (55-3/4)			/	
	WIDTH : W mm(inch)		1400 (55-1/8)			940 (37-1/32)			/	
	DEPTH : D mm(inch)		700 (27-9/16)			340 (13-13/32)			/	
PACK IM	HEIGHT : H mm		355			1556			/	
	WIDTH : W mm		1614			1055			/	
	DEPTH : D mm		850			485			/	
MASS	(NET) kg(lb)		45 (99)			98 (216)			/	
	(GROSS) kg(lb)		54 (119)			108 (238)			/	
LAYERS LIMIT (actually)			9 (10)			1 (2)				
Operation Condition		Cool O.D(DBT)	18°C ~ 32°C			-15°C ~ 46°C				
		Heat O.D(DBT)	16°C ~ 30°C			-20°C ~ 24°C				
PIPING	PIPE DIAMETER mm (inch)		(Liquid)ø9.52(3/8) (Gas)ø15.88(5/8)			(Liquid)ø9.52(3/8) (Gas)ø15.88(5/8)				
	CONNECT METHOD, STD LENGTH m (ft)		flared type, 5.0(16.4)			flared type, 5.0(16.4)				
	PIPE LENGTH RANGE m (ft)		5 ~ 75 (16.4 ~ 246.1)						~	~
	I/D&O/D HEIGHT DIFFERENCE m (ft)		15 (OD located lower) / 30 (OD located higher) (49.2/98.4)							
	ADD GAS AMOUNT g/m (oz/ft)		50 (0.538)							
	PIPE LENGTH FOR ADDITIONAL GAS m (ft)		30 (98.4)							

*1: In case it is necessary to indicate the air □ow volume in (l/s), the value in (m³/min.) shall be multiplied by 16.7 and rounded down the decimal point.
*2: If the EUROVENT Certi□ed models can be operated under the □extra-low□temperature condition, -7□C dry bulb and -8□C wet-bulb temperatures with rated voltage 230 V shall be used.
*3: Network Impedance shall be applicable for EUROPE and CHINA models.
*4: The annual consumption is calculated by multiplying the input power at 230 V (400 V) by an average of 500 hours per year in cooling mode.
*5: EER and COP classification is at 230 V (400 V) only in accordance with EU directive 2002/31/EC.
*6: SEER and SCOP classification is at 230V(400V) only in accordance with EN-14825. For heating, SCOP indicates the value of only Average heating season, Other fiche data indicates in an attached sheet.

Simultaneous (Twin) -Type

1-1. Unit Speci□cations

PE1

5. Ducted Type S-36PN1E5A×2 / U-71PE1E5A

INDOOR		MODEL	S-36PN1E5A×2							
OUTDOOR		MODEL				U-71PE1E5A				
Branch pipe		MODEL	CZ-P155BK1							
PERFORMANCE TEST CONDITION			ISO13253 / EN14511 / EN14825 / EN12102							
POWER SUPPLY		ø, Hz	1ø 50Hz			1ø 50Hz				
		V	220	230	240	220	230	240	Min	Max
COOLING	CAPACITY	kW	7.1	7.1	7.1				2.5	8.0
		BTU/h	24200	24200	24200				8500	27300
	CURRENT	A	0.42×2	0.43×2	0.44×2	9.70	9.40	9.20	-	-
	INPUT POWER	W	90×2	94×2	98×2	2.010k	2.012k	2.014k	-	-
		TOTAL W		-		2.190k	2.200k	2.210k	550	2.750k
	ANNUAL CONSUMPTION	TOTAL kWh ※4		-		-	1100	-	-	-
	EER/EER CLASS	TOTAL(W/W)※5("A"~"G")	-	-	-	3.24	3.23 / A	3.21	4.55	2.91
	Erp ※6	Pdsign kW	-	-	-	-	7.1	-		
		SEER (W/W)	-	-	-	-	4.8	-		
		Annual consumption kWh	-	-	-	-	516	-		
		Class	-	-	-	-	B	-		
	POWER FACTOR	%	-	-	-	94	93	91	-	-
	NOISE INDOOR (H/M/L)	dB-A		40/38/35						
		Power Level dB		57/55/52						
	NOISE OUTDOOR (H/L)	dB-A					48/-			
		Power Level dB					65/-			
HEATING	CAPACITY	kW	8.0	8.0	8.0				2.0	9.0
		BTU/h	27300	27300	27300				6800	30700
	CURRENT	A	0.42×2	0.43×2	0.44×2	10.2	9.9	9.7	-	-
	INPUT POWER	W	90×2	94×2	98×2	2.120k	2.122k	2.124k	-	-
		TOTAL W		-		2.300k	2.310k	2.320k	500	2.920k
	COP/COP CLASS	TOTAL(W/W)※5("A"~"G")	-	-	-	3.48	3.46 / B	3.45	4.00	3.08
	Erp ※6	Pdsign kW	-	-	-	-	6.1	-		
		Tbivalen °C	-	-	-	-	-9	-		
		SCOP (W/W)	-	-	-	-	3.8	-		
		Annual consumption kWh	-	-	-	-	2245	-		
		Class	-	-	-	-	A	-		
	POWER FACTOR	%	-	-	-	94	93	91	-	-
	NOISE INDOOR (H/M/L)	dB-A		40/38/35			-		/	/
		Power Level dB		57/55/52			-			
	NOISE OUTDOOR (H/L)	dB-A		-			50/-		/	/
		Power Level dB		-			67/-			
EXTRA LOW TEMP	Total CAPACITY(kW)/INPUT POWER(W)/COP		-							
MAX CURRENT(A)/MAX INPUT POWER(W)			0.60×2/130×2	0.62×2/140×2	0.63×2/150×2	18.0/3.800k	18.0/3.930k	18.0/4.060k	/	
STARTING CURRENT(A)/COMP OUTPUT(W)			-	-	-	10.2/2.0k	9.9/2.0k	9.7/2.0k	/	
NETWORK IMPEDANCE (ΩMAX.)				-			-			
FM OUTPUT (W)				60×2			90		/	
MOISTURE REMOVAL VOLUME		L/h(Pt/h)	4.2	(2.1×2)	(8.8)		-			
External static pressure		Pa	50 (MIN10 - MAX80)							
I/D AIR FLOW	COOL	m^3/min (ft^3/min)	[14/12/10 (494/424/353)]×2							
	HEAT	m^3/min (ft^3/min)	[14/12/10 (494/424/353)]×2							
O/D AIR FLOW	COOL	m^3/min (ft^3/min)				60		(2119)		
	HEAT	m^3/min (ft^3/min)				60		(2119)		
REFRIGERANT TYPE, AMOUNT g(oz)						R410A	2.35k	(82.9)	/	
PROD	HEIGHT : H mm(inch)		250 (9-27/32)			996 (39-7/32)			/	
	WIDTH : W mm(inch)		780 (+100) (30-23/32) (+3-15/16)			940 (37-1/32)			/	
	DEPTH : D mm(inch)		650 (25-19/32)			340 (13-13/32)			/	
PACK	HEIGHT : H mm		345			1136			/	
	WIDTH : W mm		1007			1055			/	
	DEPTH : D mm		777			485			/	
MASS	(NET) kg(lb)		29 (64)			69 (152)			/	
	(GROSS) kg(lb)		34 (75)			77 (170)			/	
LAYERS LIMIT (actually)			8 (9)			2 (3)				
Operation Condition		Cool O.D(DBT)	18°C ~ 32°C			-15°C ~ 46°C				
		Heat O.D(DBT)	16°C ~ 30°C			-20°C ~ 24°C				
PIPING	PIPE DIAMETER mm (inch)		(Liquid)ø6.35(1/4) (Gas)ø12.7(1/2)			(Liquid)ø9.52(3/8) (Gas)ø15.88(5/8)				
	CONNECT METHOD, STD LENGTH m (ft)		flared type, 5.0(16.4)			flared type, 5.0(16.4)				
	PIPE LENGTH RANGE m (ft)		5 ~ 50 (16.4 ~ 164.0)						~	~
	I/D&O/D HEIGHT DIFFERENCE m (ft)		15 (OD located lower) / 30 (OD located higher) (49.2/98.4)							
	ADD GAS AMOUNT g/m (oz/ft)		50 (0.538)							
	PIPE LENGTH FOR ADDITIONAL GAS m (ft)		30 (98.4)							

*1: In case it is necessary to indicate the air □ow volume in (l/s), the value in (m^3/min.) shall be multiplied by 16.7 and rounded down the decimal point.
*2: If the EUROVENT Certi□ed models can be operated under the □extra-low□temperature condition, -7□C dry bulb and -8□C wet-bulb temperatures with rated voltage 230 V shall be used.
*3: Network Impedance shall be applicable for EUROPE and CHINA models.
*4: The annual consumption is calculated by multiplying the input power at 230 V (400 V) by an average of 500 hours per year in cooling mode.
*5: EER and COP classification is at 230 V (400 V) only in accordance with EU directive 2002/31/EC.
*6: SEER and SCOP classification is at 230V(400V) only in accordance with EN-14825. For heating, SCOP indicates the value of only Average heating season, Other fiche data indicates in an attached sheet.

Simultaneous (Triple) -Type

1-1. Unit Specifications

PE1

5. Ducted Type S-36PN1E5A×3 / U-100PE1E5A

INDOOR		MODEL	S-36PN1E5A×3							
OUTDOOR		MODEL				U-100PE1E5A				
Branch pipe		MODEL	CZ-P3HPC2							
PERFORMANCE TEST CONDITION			ISO13253 / EN14511 / EN14825 / EN12102							
POWER SUPPLY		ø, Hz	1ø 50Hz			1ø 50Hz				
		V	220	230	240	220	230	240	Min	Max
COOLING	CAPACITY	kW	10.0	10.0	10.0				3.3	12.5
		BTU/h	34100	34100	34100				11300	42700
	CURRENT	A	0.42×3	0.43×3	0.44×3	11.6	11.2	10.9	-	-
	INPUT POWER	W	90×3	94×3	98×3	2.465k	2.468k	2.471k	-	-
		TOTAL W		-		2.735k	2.750k	2.765k	870	3.800k
	ANNUAL CONSUMPTION	TOTAL kWh ※4		-		-	1375	-	-	-
	EER/EER CLASS	TOTAL(W/W)※5("A"~"G")	-	-	-	3.66	3.64 / A	3.62	3.79	3.29
	Erp ※6 Pdsign	kW	-	-	-	-	10.0	-		
	Erp ※6 SEER	(W/W)	-	-	-	-	5.2	-		
	Erp ※6 Annual consumption	kWh	-	-	-	-	673	-		
	Erp ※6 Class		-	-	-	-	A	-		
	POWER FACTOR	%	-	-	-	97	96	94	-	-
	NOISE INDOOR (H/M/L)	dB-A		40/38/35						
		Power Level dB		57/55/52						
	NOISE OUTDOOR (H/L)	dB-A					52/-			
		Power Level dB					69/-			
HEATING	CAPACITY	kW	11.2	11.2	11.2				4.1	14.0
		BTU/h	38200	38200	38200				14000	47800
	CURRENT	A	0.42×3	0.43×3	0.44×3	12.8	12.5	12.2	-	-
	INPUT POWER	W	90×3	94×3	98×3	2.745k	2.748k	2.751k	-	-
		TOTAL W		-		3.015k	3.030k	3.045k	980	4.500k
	COP/COP CLASS	TOTAL(W/W)※5("A"~"G")	-	-	-	3.71	3.70 / A	3.68	4.18	3.11
	Erp ※6 Pdsign	kW	-	-	-	-	10.0	-		
	Erp ※6 Tbivalen	°C	-	-	-	-	-10	-		
	Erp ※6 SCOP	(W/W)	-	-	-	-	3.8	-		
	Erp ※6 Annual consumption	kWh	-	-	-	-	3670	-		
	Erp ※6 Class		-	-	-	-	A	-		
	POWER FACTOR	%	-	-	-	97	96	94	-	-
	NOISE INDOOR (H/M/L)	dB-A		40/38/35			-		/	/
		Power Level dB		57/55/52			-			
	NOISE OUTDOOR (H/L)	dB-A		-			52/-		/	/
		Power Level dB		-			69/-			
EXTRA LOW TEMP	Total CAPACITY(kW)/INPUT POWER(W)/COP					-				
MAX CURRENT(A)/MAX INPUT POWER(W)			0.60×3/130×3	0.62×3/140×3	0.63×3/150×3	25.0/5.350k	25.0/5.550k	25.0/5.750k	/	
STARTING CURRENT(A)/COMP OUTPUT(W)			-	-	-	12.8/3.0k	12.5/3.0k	12.2/3.0k	/	
NETWORK IMPEDANCE (ΩMAX.)				-			-			
FM OUTPUT (W)				60×3			90×2		/	
MOISTURE REMOVAL VOLUME		L/h(Pt/h)	6.0	(2.0×3)	(12.6)		-			
External static pressure		Pa		50 (MIN10 - MAX80)						
I/D AIR FLOW	COOL	m^3/min (ft^3/min)		[14/12/10 (494/424/353)]×3						
	HEAT	m^3/min (ft^3/min)		[14/12/10 (494/424/353)]×3						
O/D AIR FLOW	COOL	m^3/min (ft^3/min)					110	(3885)		
	HEAT	m^3/min (ft^3/min)					95	(3355)		
REFRIGERANT TYPE, AMOUNT g(oz)						R410A	3.40k	(119.9)	/	
PROD DIM	HEIGHT : H mm(inch)			250 (9-27/32)			1416 (55-3/4)		/	
	WIDTH : W mm(inch)			780 (+100) (30-23/32) (+3-15/16)			940 (37-1/32)		/	
	DEPTH : D mm(inch)			650 (25-19/32)			340 (13-13/32)		/	
PACK DIM	HEIGHT : H mm			345			1556		/	
	WIDTH : W mm			1007			1055		/	
	DEPTH : D mm			777			485		/	
MASS	(NET) kg(lb)			29 (64)			98 (216)		/	
	(GROSS) kg(lb)			34 (75)			108 (238)		/	
LAYERS LIMIT (actually)				8 (9)			1 (2)			
Operation Condition		Cool O.D(DBT)		18°C ~ 32°C			-15°C ~ 46°C			
		Heat O.D(DBT)		16°C ~ 30°C			-20°C ~ 24°C			
PIPING	PIPE DIAMETER mm (inch)			(Liquid)ø6.35(1/4) (Gas)ø12.7(1/2)			(Liquid)ø9.52(3/8) (Gas)ø15.88(5/8)			
	CONNECT METHOD, STD LENGTH m (ft)			flared type, 5.0(16.4)			flared type, 5.0(16.4)			
	PIPE LENGTH RANGE m (ft)			5 ~ 75 (16.4 ~ 246.1)					~	~
	I/D&O/D HEIGHT DIFFERENCE m (ft)			15 (OD located lower) / 30 (OD located higher) (49.2/98.4)						
	ADD GAS AMOUNT g/m (oz/ft)			50 (0.538)						
	PIPE LENGTH FOR ADDITIONAL GAS m (ft)			20 (65.6)						

*1: In case it is necessary to indicate the air flow volume in (l/s), the value in (m^3/min.) shall be multiplied by 16.7 and rounded down the decimal point.
*2: If the EUROVENT Certified models can be operated under the extra-low temperature condition, -7°C dry bulb and -8°C wet-bulb temperatures with rated voltage 230 V shall be used.
*3: Network Impedance shall be applicable for EUROPE and CHINA models.
*4: The annual consumption is calculated by multiplying the input power at 230 V (400 V) by an average of 500 hours per year in cooling mode.
*5: EER and COP classification is at 230 V (400 V) only in accordance with EU directive 2002/31/EC.
*6: SEER and SCOP classification is at 230V(400V) only in accordance with EN-14825. For heating, SCOP indicates the value of only Average heating season, Other fiche data indicates in an attached sheet.

Simultaneous (Double-Twin) -Type

1-1. Unit Speci□cations

PE1

5. Ducted Type S-36PN1E5A×4 / U-125PE1E5A

INDOOR		MODEL	S-36PN1E5A×4							
OUTDOOR		MODEL				U-125PE1E5A				
Branch pipe		MODEL	CZ-P155BK1×3							
PERFORMANCE TEST CONDITION			ISO13253 / EN14511 / EN12102							
POWER SUPPLY		ø, Hz	1ø 50Hz			1ø 50Hz				
		V	220	230	240	220	230	240	Min	Max
COOLING	CAPACITY	kW	12.5	12.5	12.5				3.3	14.0
		BTU/h	42700	42700	42700				11300	47800
	CURRENT	A	0.42×4	0.43×4	0.44×4	17.4	16.9	16.4	-	-
	INPUT POWER	W	90×4	94×4	98×4	3.665k	3.669k	3.673k	-	-
		TOTAL W		-		4.025k	4.045k	4.065k	1000	4.800k
	ANNUAL CONSUMPTION	TOTAL kWh ※4		-		-	2025	-	-	-
	EER/EER CLASS	TOTAL(W/W)※5/("A"~"G")	-	-	-	3.11	3.09 / B	3.08	3.30	2.92
	Erp ※6 Pdsign	kW	-	-	-	-	-	-		
	Erp ※6 SEER	(W/W)	-	-	-	-	-	-		
	Erp ※6 Annual consumption	kWh	-	-	-	-	-	-		
	Erp ※6 Class		-	-	-	-	-	-		
	POWER FACTOR	%	-	-	-	96	94	93	-	-
	NOISE INDOOR (H/M/L)	dB-A		40/38/35						
		Power Level dB		57/55/52						
	NOISE OUTDOOR (H/L)	dB-A					53/-			
		Power Level dB					70/-			
HEATING	CAPACITY	kW	14.0	14.0	14.0				4.1	16.0
		BTU/h	47800	47800	47800				14000	54600
	CURRENT	A	0.42×4	0.43×4	0.44×4	17.3	16.8	16.3	-	-
	INPUT POWER	W	90×4	94×4	98×4	3.655k	3.659k	3.663k	-	-
		TOTAL W		-		4.015k	4.035k	4.055k	1050	5.400k
	COP/COP CLASS	TOTAL(W/W)※5/("A"~"G")	-	-	-	3.49	3.47 / B	3.45	3.90	2.96
	Erp ※6 Pdsign	kW	-	-	-	-	-	-		
	Erp ※6 Tbivalen	°C	-	-	-	-	-	-		
	Erp ※6 SCOP	(W/W)	-	-	-	-	-	-		
	Erp ※6 Annual consumption	kWh	-	-	-	-	-	-		
	Erp ※6 Class		-	-	-	-	-	-		
	POWER FACTOR	%	-	-	-	96	95	93	-	-
	NOISE INDOOR (H/M/L)	dB-A		40/38/35			-		/	/
		Power Level dB		57/55/52			-			
	NOISE OUTDOOR (H/L)	dB-A		-			53/-		/	/
		Power Level dB		-			70/-			
EXTRA LOW TEMP	Total CAPACITY(kW)/INPUT POWER(W)/COP		-							
MAX CURRENT(A)/MAX INPUT POWER(W)			0.60×4/130×4	0.62×4/140×4	0.63×4/150×4	28.0/6.000k	28.0/6.200k	28.0/6.400k	/	
STARTING CURRENT(A)/COMP OUTPUT(W)			-	-	-	17.4/3.0k	16.9/3.0k	16.4/3.0k	/	
NETWORK IMPEDANCE (ΩMAX.)				-			-			
FM OUTPUT (W)				60×4			90×2		/	
MOISTURE REMOVAL VOLUME		L/h(Pt/h)	7.9	(1.98×4)	(16.6)		-			
External static pressure		Pa	50 (MIN10 - MAX80)							
I/D AIR FLOW	COOL	m^3/min (ft^3/min)	[14/12/10 (494/424/353)]×4							
	HEAT	m^3/min (ft^3/min)	[14/12/10 (494/424/353)]×4							
O/D AIR FLOW	COOL	m^3/min (ft^3/min)				130		(4591)		
	HEAT	m^3/min (ft^3/min)				110		(3885)		
REFRIGERANT TYPE, AMOUNT g(oz)						R410A	3.40k	(119.9)	/	
PROD IM	HEIGHT : H mm(inch)		250 (9-27/32)			1416 (55-3/4)			/	
	WIDTH : W mm(inch)		780 (+100) (30-23/32) (+3-15/16)			940 (37-1/32)			/	
	DEPTH : D mm(inch)		650 (25-19/32)			340 (13-13/32)			/	
PACK DIM	HEIGHT : H mm		345			1556			/	
	WIDTH : W mm		1007			1055			/	
	DEPTH : D mm		777			485			/	
MASS	(NET) kg(lb)		29 (64)			98 (216)			/	
	(GROSS) kg(lb)		34 (75)			108 (238)			/	
LAYERS LIMIT (actually)			8 (9)			1 (2)				
Operation Condition		Cool O.D(DBT)	18°C ~ 32°C			-15°C ~ 46°C				
		Heat O.D(DBT)	16°C ~ 30°C			-20°C ~ 24°C				
PIPING	PIPE DIAMETER mm (inch)		(Liquid)ø6.35(1/4) (Gas)ø12.7(1/2)			(Liquid)ø9.52(3/8) (Gas)ø15.88(5/8)				
	CONNECT METHOD, STD LENGTH m (ft)		flared type, 5.0(16.4)			flared type, 5.0(16.4)				
	PIPE LENGTH RANGE m (ft)		5 ~ 75 (16.4 ~ 246.1)						~	~
	I/D&O/D HEIGHT DIFFERENCE m (ft)		15 (OD located lower) / 30 (OD located higher) (49.2/98.4)							
	ADD GAS AMOUNT g/m (oz/ft)		50 (0.538)							
	PIPE LENGTH FOR ADDITIONAL GAS m (ft)		20 (65.6)							

*1: In case it is necessary to indicate the air □ow volume in (l/s), the value in (m^3/min.) shall be multiplied by 16.7 and rounded down the decimal point.
*2: If the EUROVENT Certi□ed models can be operated under the □extra-low□temperature condition, -7□C dry bulb and -8□C wet-bulb temperatures with rated voltage 230 V shall be used.
*3: Network Impedance shall be applicable for EUROPE and CHINA models.
*4: The annual consumption is calculated by multiplying the input power at 230 V (400 V) by an average of 500 hours per year in cooling mode.
*5: EER and COP classification is at 230 V (400 V) only in accordance with EU directive 2002/31/EC.
*6: SEER and SCOP classification is at 230V(400V) only in accordance with EN-14825. For heating, SCOP indicates the value of only Average heating season, Other fiche data indicates in an attached sheet.

Simultaneous (Triple) -Type

1-1. Unit Speci□cations

PE1

5. Ducted Type S-45PN1E5A×3 / U-125PE1E5A

INDOOR		MODEL	S-45PN1E5A×3							
OUTDOOR		MODEL				U-125PE1E5A				
Branch pipe		MODEL	CZ-P3HPC2							
PERFORMANCE TEST CONDITION			ISO13253 / EN14511 / EN12102							
POWER SUPPLY		ø, Hz	1ø 50Hz			1ø 50Hz				
		V	220	230	240	220	230	240	Min	Max
COOLING	CAPACITY	kW	12.5	12.5	12.5				3.3	14.0
		BTU/h	42700	42700	42700				11300	47800
	CURRENT	A	0.54×3	0.55×3	0.56×3	17.4	16.9	16.4	-	-
	INPUT POWER	W	115×3	120×3	125×3	3.665k	3.665k	3.665k	-	-
		TOTAL W		-		4.010k	4.025k	4.040k	1000	4.800k
	ANNUAL CONSUMPTION	TOTAL kWh ※4		-		-	2015	-	-	-
	EER/EER CLASS	TOTAL(W/W)※5/("A"~"G")	-	-	-	3.12	3.11 / B	3.09	3.30	2.92
	Erp ※6 Pdsign	kW	-	-	-	-	-	-		
	Erp ※6 SEER	(W/W)	-	-	-	-	-	-		
	Erp ※6 Annual consumption	kWh	-	-	-	-	-	-		
	Erp ※6 Class		-	-	-	-	-	-		
	POWER FACTOR	%	-	-	-	96	94	93	-	-
	NOISE INDOOR (H/M/L)	dB-A		41/39/35						
		Power Level dB		58/56/52						
	NOISE OUTDOOR (H/L)	dB-A					53/-			
		Power Level dB					70/-			
HEATING	CAPACITY	kW	14.0	14.0	14.0				4.1	16.0
		BTU/h	47800	47800	47800				14000	54600
	CURRENT	A	0.54×3	0.55×3	0.56×3	17.3	16.8	16.3	-	-
	INPUT POWER	W	115×3	120×3	125×3	3.655k	3.655k	3.655k	-	-
		TOTAL W		-		4.000k	4.015k	4.030k	1050	5.400k
	COP/COP CLASS	TOTAL(W/W)※5/("A"~"G")	-	-	-	3.50	3.49 / B	3.47	3.90	2.96
	Erp ※6 Pdsign	kW	-	-	-	-	-	-		
	Erp ※6 Tbivalen	°C	-	-	-	-	-	-		
	Erp ※6 SCOP	(W/W)	-	-	-	-	-	-		
	Erp ※6 Annual consumption	kWh	-	-	-	-	-	-		
	Erp ※6 Class		-	-	-	-	-	-		
	POWER FACTOR	%	-	-	-	96	95	93	-	-
	NOISE INDOOR (H/M/L)	dB-A		41/39/35			-		/	/
		Power Level dB		58/56/52			-			
	NOISE OUTDOOR (H/L)	dB-A		-			53/-		/	/
		Power Level dB		-			70/-			
EXTRA LOW TEMP	Total CAPACITY(kW)/INPUT POWER(W)/COP					-				
MAX CURRENT(A)/MAX INPUT POWER(W)			0.74×3/165×3	0.76×3/180×3	0.78×3/190×3	28.0/6.000k	28.0/6.200k	28.0/6.400k	/	
STARTING CURRENT(A)/COMP OUTPUT(W)			-	-	-	17.4/3.0k	16.9/3.0k	16.4/3.0k	/	
NETWORK IMPEDANCE (ΩMAX.)				-			-			
FM OUTPUT (W)				85×3			90×2		/	
MOISTURE REMOVAL VOLUME		L/h(Pt/h)	7.9	(2.63×3)	(16.6)		-			
External static pressure		Pa		50 (MIN10 - MAX80)						
I/D AIR FLOW	COOL	m^3/min (ft^3/min)		[16/13/11 (565/459/388)]×3						
	HEAT	m^3/min (ft^3/min)		[16/13/11 (565/459/388)]×3						
O/D AIR FLOW	COOL	m^3/min (ft^3/min)					130	(4591)		
	HEAT	m^3/min (ft^3/min)					110	(3885)		
REFRIGERANT TYPE, AMOUNT g(oz)						R410A	3.40k	(119.9)	/	
PROD DIM	HEIGHT : H mm(inch)			250 (9-27/32)			1416 (55-3/4)		/	
	WIDTH : W mm(inch)			780 (+100) (30-23/32) (+3-15/16)			940 (37-1/32)		/	
	DEPTH : D mm(inch)			650 (25-19/32)			340 (13-13/32)		/	
PACK DIM	HEIGHT : H mm			345			1556		/	
	WIDTH : W mm			1007			1055		/	
	DEPTH : D mm			777			485		/	
MASS	(NET) kg(lb)			29 (64)			98 (216)		/	
	(GROSS) kg(lb)			34 (75)			108 (238)		/	
LAYERS LIMIT (actually)				8 (9)			1 (2)			
Operation Condition		Cool O.D(DBT)		18°C ~ 32°C			-15°C ~ 46°C			
		Heat O.D(DBT)		16°C ~ 30°C			-20°C ~ 24°C			
PIPING	PIPE DIAMETER mm (inch)			(Liquid)ø6.35(1/4) (Gas)ø12.7(1/2)			(Liquid)ø9.52(3/8) (Gas)ø15.88(5/8)			
	CONNECT METHOD, STD LENGTH m (ft)			flared type, 5.0(16.4)			flared type, 5.0(16.4)			
	PIPE LENGTH RANGE m (ft)			5 ~ 75			(16.4 ~ 246.1)		~	~
	I/D&O/D HEIGHT DIFFERENCE m (ft)			15 (OD located lower) / 30 (OD located higher)			(49.2/98.4)			
	ADD GAS AMOUNT g/m (oz/ft)			50			(0.538)			
	PIPE LENGTH FOR ADDITIONAL GAS m (ft)			20			(65.6)			

*1: In case it is necessary to indicate the air □ow volume in (l/s), the value in (m^3/min.) shall be multiplied by 16.7 and rounded down the decimal point.
*2: If the EUROVENT Certi□ed models can be operated under the □extra-low□temperature condition, -7□C dry bulb and -8□C wet-bulb temperatures with rated voltage 230 V shall be used.
*3: Network Impedance shall be applicable for EUROPE and CHINA models.
*4: The annual consumption is calculated by multiplying the input power at 230 V (400 V) by an average of 500 hours per year in cooling mode.
*5: EER and COP classification is at 230 V (400 V) only in accordance with EU directive 2002/31/EC.
*6: SEER and SCOP classification is at 230V(400V) only in accordance with EN-14825. For heating, SCOP indicates the value of only Average heating season, Other fiche data indicates in an attached sheet.

Single -Type

1-1. Unit Speci□cations

PE1

5. Ducted Type S-50PN1E5A / U-50PE1E5

INDOOR		MODEL	S-50PN1E5A							
PANEL		MODEL	-			-				
OUTDOOR		MODEL				U-50PE1E5				
Branch pipe		MODEL	-							
PERFORMANCE TEST CONDITION			ISO13253 / EN14511 / EN14825 / EN12102							
POWER SUPPLY		ø, Hz	1ø 50Hz			1ø 50Hz				
		V	220	230	240	220	230	240	Min	Max
COOLING	CAPACITY	kW	5.0	5.0	5.0				1.5	5.6
		BTU/h	17100	17100	17100				5100	19100
	CURRENT	A	0.54	0.55	0.56	7.10	6.80	6.60	-	-
	INPUT POWER	W	115	120	125	1.440k	1.440k	1.440k	-	-
		TOTAL W		-		1.555k	1.560k	1.565k	260	2.310k
	ANNUAL CONSUMPTION	TOTAL kWh ※4		-		-	780	-	-	-
	EER/EER CLASS	TOTAL(W/W) ※5/("A"~"G")	-	-	-	3.22	3.21 / A	3.19	5.77	2.42
	Erp ※6 Pdsign	kW	-	-	-	-	5.0	-		
	Erp ※6 SEER	(W/W)	-	-	-	-	4.7	-		
	Erp ※6 Annual consumption	kWh	-	-	-	-	375	-		
	Erp ※6 Class		-	-	-	-	B	-		
	POWER FACTOR	%	-	-	-	92	92	91	-	-
	NOISE INDOOR (H/M/L)	dB-A		41/39/35						
		Power Level dB		58/56/52						
	NOISE OUTDOOR (H/L)	dB-A					46/-			
		Power Level dB					65/-			
HEATING	CAPACITY	kW	5.6	5.6	5.6				1.5	6.3
		BTU/h	19100	19100	19100				5100	21500
	CURRENT	A	0.54	0.55	0.56	8.00	7.70	7.40	-	-
	INPUT POWER	W	115	120	125	1.620k	1.620k	1.620k	-	-
		TOTAL W		-		1.735k	1.740k	1.745k	220	2.520k
	COP/COP CLASS	TOTAL(W/W) ※5/("A"~"G")	-	-	-	3.23	3.22 / C	3.21	6.82	2.50
	Erp ※6 Pdsign	kW	-	-	-	-	3.8	-		
	Erp ※6 Tbivalen	°C	-	-	-	-	-10	-		
	Erp ※6 SCOP	(W/W)	-	-	-	-	3.8	-		
	Erp ※6 Annual consumption	kWh	-	-	-	-	1400	-		
	Erp ※6 Class		-	-	-	-	A	-		
	POWER FACTOR	%	-	-	-	92	91	91	-	-
	NOISE INDOOR (H/M/L)	dB-A		41/39/35			-		/	/
		Power Level dB		58/56/52			-			
	NOISE OUTDOOR (H/L)	dB-A		-			50/-		/	/
		Power Level dB		-			69/-			
EXTRA LOW TEMP	Total CAPACITY(kW)/INPUT POWER(W)/COP					-				
MAX CURRENT(A)/MAX INPUT POWER(W)			0.74/165	0.76/180	0.78/190	12.0/2.430k	12.0/2.520k	12.0/2.630k	/	
STARTING CURRENT(A)/COMP OUTPUT(W)			-	-	-	8.0/1.7k	7.7/1.7k	7.4/1.7k	/	
NETWORK IMPEDANCE (ΩMAX.)				-			-			
FM OUTPUT (W)				85			90		/	
MOISTURE REMOVAL VOLUME		L/h(Pt/h)		2.8 (5.9)			-			
External static pressure		Pa		50 (MIN10 - MAX80)						
I/D AIR FLOW	COOL	m^3/min (ft^3/min)		16/13/11 (565/459/388)						
	HEAT	m^3/min (ft^3/min)		16/13/11 (565/459/388)						
O/D AIR FLOW	COOL	m^3/min (ft^3/min)					30 (1067)			
	HEAT	m^3/min (ft^3/min)					35 (1225)			
REFRIGERANT TYPE, AMOUNT g(oz)						R410A	1.65k (58.2)		/	
PROD	HEIGHT : H mm(inch)			250 (9-27/32)			569 (22-13/32)		/	
	WIDTH : W mm(inch)			780 (+100) (30-23/32) (+3-15/16)			790 (31-7/64)		/	
	DEPTH : D mm(inch)			650 (25-19/32)			285 (11-7/32)		/	
PACK	HEIGHT : H mm			345			645		/	
	WIDTH : W mm			1007			921		/	
	DEPTH : D mm			777			386		/	
MASS	(NET) kg(lb)			29 (64)			42 (93)		/	
	(GROSS) kg(lb)			34 (75)			46 (101)		/	
LAYERS LIMIT (actually)				8 (9)			4 (5)			
Operation Condition		Cool O.D(DBT)		18°C ~ 32°C			-15°C ~ 46°C			
		Heat O.D(DBT)		16°C ~ 30°C			-20°C ~ 24°C			
PIPING	PIPE DIAMETER mm (inch)		(Liquid)ø6.35(1/4) (Gas)ø12.7(1/2)			(Liquid)ø6.35(1/4) (Gas)ø12.7(1/2)				
	CONNECT METHOD, STD LENGTH m (ft)		flared type, 5.0(16.4)			flared type, 5.0(16.4)				
	PIPE LENGTH RANGE m (ft)			5 ~ 40 (16.4 ~ 131.2)					~	~
	I/D&O/D HEIGHT DIFFERENCE m (ft)		15 (OD located lower) /30 (OD located higher) (49.2/98.4)							
	ADD GAS AMOUNT g/m (oz/ft)			20 (0.215)						
	PIPE LENGTH FOR ADDITIONAL GAS m (ft)			30 (98.4)						

*1: In case it is necessary to indicate the air □ow volume in (l/s), the value in (m^3/min.) shall be multiplied by 16.7 and rounded down the decimal point.
*2: If the EUROVENT Certi□ed models can be operated under the □extra-low□temperature condition, -7□C dry bulb and -8□C wet-bulb temperatures with rated voltage 230 V shall be used.
*3: Network Impedance shall be applicable for EUROPE and CHINA models.
*4: The annual consumption is calculated by multiplying the input power at 230 V (400 V) by an average of 500 hours per year in cooling mode.
*5: EER and COP classification is at 230 V (400 V) only in accordance with EU directive 2002/31/EC.
*6: SEER and SCOP classification is at 230V(400V) only in accordance with EN-14825. For heating, SCOP indicates the value of only Average heating season, Other fiche data indicates in an attached sheet.

Simultaneous (Twin) -Type

1-1. Unit Specifications

PE1

5. Ducted Type S-50PN1E5A×2 / U-100PE1E5A

INDOOR		MODEL	S-50PN1E5A×2							
OUTDOOR		MODEL				U-100PE1E5A				
Branch pipe		MODEL	CZ-P155BK1							
PERFORMANCE TEST CONDITION			ISO13253 / EN14511 / EN14825 / EN12102							
POWER SUPPLY		ø, Hz	1ø 50Hz			1ø 50Hz				
		V	220	230	240	220	230	240	Min	Max
COOLING	CAPACITY	kW	10.0	10.0	10.0				3.3	12.5
		BTU/h	34100	34100	34100				11300	42700
	CURRENT	A	0.54×2	0.55×2	0.56×2	11.6	11.2	10.9	-	-
	INPUT POWER	W	115×2	120×2	125×2	2.465k	2.465k	2.465k	-	-
		TOTAL W		-		2.695k	2.705k	2.715k	870	3.800k
	ANNUAL CONSUMPTION	TOTAL kWh ※4		-		-	1355	-	-	-
	EER/EER CLASS	TOTAL(W/W)※5/("A"~"G")	-	-	-	3.71	3.70 / A	3.68	3.79	3.29
	Erp ※6 Pdsign	kW	-	-	-	-	10.0	-		
	Erp ※6 SEER	(W/W)	-	-	-	-	5.5	-		
	Erp ※6 Annual consumption	kWh	-	-	-	-	636	-		
	Erp ※6 Class		-	-	-	-	A	-		
	POWER FACTOR	%	-	-	-	97	96	94	-	-
	NOISE INDOOR (H/M/L)	dB-A		41/39/35						
		Power Level dB		58/56/52						
	NOISE OUTDOOR (H/L)	dB-A					52/-			
		Power Level dB					69/-			
HEATING	CAPACITY	kW	11.2	11.2	11.2				4.1	14.0
		BTU/h	38200	38200	38200				14000	47800
	CURRENT	A	0.54×2	0.55×2	0.56×2	12.8	12.5	12.2	-	-
	INPUT POWER	W	115×2	120×2	125×2	2.745k	2.745k	2.745k	-	-
		TOTAL W		-		2.975k	2.985k	2.995k	980	4.500k
	COP/COP CLASS	TOTAL(W/W)※5/("A"~"G")	-	-	-	3.76	3.75 / A	3.74	4.18	3.11
	Erp ※6 Pdsign	kW	-	-	-	-	10.0	-		
	Erp ※6 Tbivalen	°C	-	-	-	-	-10	-		
	Erp ※6 SCOP	(W/W)	-	-	-	-	3.8	-		
	Erp ※6 Annual consumption	kWh	-	-	-	-	3670	-		
	Erp ※6 Class		-	-	-	-	A	-		
	POWER FACTOR	%	-	-	-	97	95	94	-	-
	NOISE INDOOR (H/M/L)	dB-A		41/39/35			-		/	/
		Power Level dB		58/56/52			-			
	NOISE OUTDOOR (H/L)	dB-A		-			52/-		/	/
		Power Level dB		-			69/-			
EXTRA LOW TEMP	Total CAPACITY(kW)/INPUT POWER(W)/COP					-				
MAX CURRENT(A)/MAX INPUT POWER(W)			0.74×2/165×2	0.76×2/180×2	0.78×2/190×2	25.0/5.350k	25.0/5.550k	25.0/5.750k	/	
STARTING CURRENT(A)/COMP OUTPUT(W)			-	-	-	12.8/3.0k	12.5/3.0k	12.2/3.0k	/	
NETWORK IMPEDANCE (ΩMAX.)				-			-			
FM OUTPUT (W)				85×2			90×2		/	
MOISTURE REMOVAL VOLUME		L/h(Pt/h)	6.0	(3.0×2)	(12.6)		-			
External static pressure		Pa		50 (MIN10 - MAX80)						
I/D AIR FLOW	COOL	m^3/min (ft^3/min)		[16/13/11 (565/459/388)]×2						
	HEAT	m^3/min (ft^3/min)		[16/13/11 (565/459/388)]×2						
O/D AIR FLOW	COOL	m^3/min (ft^3/min)				110		(3885)		
	HEAT	m^3/min (ft^3/min)				95		(3355)		
REFRIGERANT TYPE, AMOUNT g(oz)						R410A	3.40k	(119.9)	/	
PROD DIM	HEIGHT : H mm(inch)			250 (9-27/32)			1416 (55-3/4)		/	
	WIDTH : W mm(inch)			780 (+100) (30-23/32) (+3-15/16)			940 (37-1/32)		/	
	DEPTH : D mm(inch)			650 (25-19/32)			340 (13-13/32)		/	
PACK DIM	HEIGHT : H mm			345			1556		/	
	WIDTH : W mm			1007			1055		/	
	DEPTH : D mm			777			485		/	
MASS	(NET) kg(lb)			29 (64)			98 (216)		/	
	(GROSS) kg(lb)			34 (75)			108 (238)		/	
LAYERS LIMIT (actually)				8 (9)			1 (2)			
Operation Condition		Cool O.D(DBT)		18°C ~ 32°C			-15°C ~ 46°C			
		Heat O.D(DBT)		16°C ~ 30°C			-20°C ~ 24°C			
PIPING	PIPE DIAMETER mm (inch)		(Liquid)ø6.35(1/4) (Gas)ø12.7(1/2)			(Liquid)ø9.52(3/8) (Gas)ø15.88(5/8)				
	CONNECT METHOD, STD LENGTH m (ft)		flared type, 5.0(16.4)			flared type, 5.0(16.4)				
	PIPE LENGTH RANGE m (ft)			5 ~ 75		(16.4 ~ 246.1)			~	~
	I/D&O/D HEIGHT DIFFERENCE m (ft)		15 (OD located lower) / 30 (OD located higher)				(49.2/98.4)			
	ADD GAS AMOUNT g/m (oz/ft)			50		(0.538)				
	PIPE LENGTH FOR ADDITIONAL GAS m (ft)			30		(98.4)				

*1: In case it is necessary to indicate the air flow volume in (l/s), the value in (m^3/min.) shall be multiplied by 16.7 and rounded down the decimal point.
*2: If the EUROVENT Certified models can be operated under the extra-low temperature condition, -7°C dry bulb and -8°C wet-bulb temperatures with rated voltage 230 V shall be used.
*3: Network Impedance shall be applicable for EUROPE and CHINA models.
*4: The annual consumption is calculated by multiplying the input power at 230 V (400 V) by an average of 500 hours per year in cooling mode.
*5: EER and COP classification is at 230 V (400 V) only in accordance with EU directive 2002/31/EC.
*6: SEER and SCOP classification is at 230V(400V) only in accordance with EN-14825. For heating, SCOP indicates the value of only Average heating season, Other fiche data indicates in an attached sheet.

Simultaneous (Triple) -Type

1-1. Unit Speci□cations

PE1

5. Ducted Type S-50PN1E5A×3 / U-140PE1E5A

INDOOR		MODEL	S-50PN1E5A×3							
OUTDOOR		MODEL				U-140PE1E5A				
Branch pipe		MODEL	CZ-P3HPC2							
PERFORMANCE TEST CONDITION			ISO13253 / EN14511 / EN12102							
POWER SUPPLY		ø, Hz	1ø 50Hz			1ø 50Hz				
		V	220	230	240	220	230	240	Min	Max
COOLING	CAPACITY	kW	14.0	14.0	14.0				3.3	15.5
		BTU/h	47800	47800	47800				11300	52900
	CURRENT	A	0.54×3	0.55×3	0.56×3	20.5	20.1	19.5	-	-
	INPUT POWER	W	115×3	120×3	125×3	4.400k	4.400k	4.400k	-	-
		TOTAL W		-		4.745k	4.760k	4.775k	1000	6.200k
	ANNUAL CONSUMPTION	TOTAL kWh ※4		-		-	2380	-	-	-
	EER/EER CLASS	TOTAL(W/W)※5("A"~"G")	-	-	-	2.95	2.94 / C	2.93	3.30	2.50
	Erp ※6 Pdsign	kW	-	-	-	-	-	-		
	Erp ※6 SEER	(W/W)	-	-	-	-	-	-		
	Erp ※6 Annual consumption	kWh	-	-	-	-	-	-		
	Erp ※6 Class		-	-	-	-	-	-		
	POWER FACTOR	%	-	-	-	98	95	94	-	-
	NOISE INDOOR (H/M/L)	dB-A		41/39/35						
		Power Level dB		58/56/52						
	NOISE OUTDOOR (H/L)	dB-A					54/-			
		Power Level dB					71/-			
HEATING	CAPACITY	kW	16.0	16.0	16.0				4.1	18.0
		BTU/h	54600	54600	54600				14000	61400
	CURRENT	A	0.54×3	0.55×3	0.56×3	20.6	20.2	19.6	-	-
	INPUT POWER	W	115×3	120×3	125×3	4.440k	4.440k	4.440k	-	-
		TOTAL W		-		4.785k	4.800k	4.815k	1050	6.100k
	COP/COP CLASS	TOTAL(W/W)※5("A"~"G")	-	-	-	3.34	3.33 / C	3.32	3.90	2.95
	Erp ※6 Pdsign	kW	-	-	-	-	-	-		
	Erp ※6 Tbivalen	°C	-	-	-	-	-	-		
	Erp ※6 SCOP	(W/W)	-	-	-	-	-	-		
	Erp ※6 Annual consumption	kWh	-	-	-	-	-	-		
	Erp ※6 Class		-	-	-	-	-	-		
	POWER FACTOR	%	-	-	-	98	96	94	-	-
	NOISE INDOOR (H/M/L)	dB-A		41/39/35			-		/	/
		Power Level dB		58/56/52			-			
	NOISE OUTDOOR (H/L)	dB-A		-			55/-		/	/
		Power Level dB		-			71/-			
EXTRA LOW TEMP	Total CAPACITY(kW)/INPUT POWER(W)/COP				-					
MAX CURRENT(A)/MAX INPUT POWER(W)			0.74×3/165×3	0.76×3/180×3	0.78×3/190×3	30.0/6.450k	30.0/6.650k	30.0/6.850k	/	
STARTING CURRENT(A)/COMP OUTPUT(W)			-	-	-	20.6/3.0k	20.2/3.0k	19.6/3.0k	/	
NETWORK IMPEDANCE (ΩMAX.)				-			-			
FM OUTPUT (W)				85×3			90×2		/	
MOISTURE REMOVAL VOLUME		L/h(Pt/h)	9.0	(3.0×3)	(18.9)		-			
External static pressure		Pa		50 (MIN10 - MAX80)						
I/D AIR FLOW	COOL	m^3/min (ft^3/min)		[16/13/11 (565/459/388)]×3						
	HEAT	m^3/min (ft^3/min)		[16/13/11 (565/459/388)]×3						
O/D AIR FLOW	COOL	m^3/min (ft^3/min)					135	(4767)		
	HEAT	m^3/min (ft^3/min)					120	(4238)		
REFRIGERANT TYPE, AMOUNT g(oz)						R410A	3.40k	(119.9)	/	
PROD IM	HEIGHT : H mm(inch)			250 (9-27/32)			1416 (55-3/4)		/	
	WIDTH : W mm(inch)			780 (+100) (30-23/32) (+3-15/16)			940 (37-1/32)		/	
	DEPTH : D mm(inch)			650 (25-19/32)			340 (13-13/32)		/	
PACK DIM	HEIGHT : H mm			345			1556		/	
	WIDTH : W mm			1007			1055		/	
	DEPTH : D mm			777			485		/	
MASS	(NET) kg(lb)			29 (64)			98 (216)		/	
	(GROSS) kg(lb)			34 (75)			108 (238)		/	
LAYERS LIMIT (actually)				8 (9)			1 (2)			
Operation Condition		Cool O.D(DBT)		18°C ~ 32°C			-15°C ~ 46°C			
		Heat O.D(DBT)		16°C ~ 30°C			-20°C ~ 24°C			
PIPING	PIPE DIAMETER mm (inch)			(Liquid)ø6.35(1/4) (Gas)ø12.7(1/2)			(Liquid)ø9.52(3/8) (Gas)ø15.88(5/8)			
	CONNECT METHOD, STD LENGTH m (ft)			flared type, 5.0(16.4)			flared type, 5.0(16.4)			
	PIPE LENGTH RANGE m (ft)			5 ~ 75 (16.4 ~ 246.1)					~	~
	I/D&O/D HEIGHT DIFFERENCE m (ft)			15 (OD located lower) / 30 (OD located higher) (49.2/98.4)						
	ADD GAS AMOUNT g/m (oz/ft)			50 (0.538)						
	PIPE LENGTH FOR ADDITIONAL GAS m (ft)			20 (65.6)						

*1: In case it is necessary to indicate the air □ow volume in (l/s), the value in (m^3/min.) shall be multiplied by 16.7 and rounded down the decimal point.
*2: If the EUROVENT Certi□ed models can be operated under the □extra-low□temperature condition, -7□C dry bulb and -8□C wet-bulb temperatures with rated voltage 230 V shall be used.
*3: Network Impedance shall be applicable for EUROPE and CHINA models.
*4: The annual consumption is calculated by multiplying the input power at 230 V (400 V) by an average of 500 hours per year in cooling mode.
*5: EER and COP classification is at 230 V (400 V) only in accordance with EU directive 2002/31/EC.
*6: SEER and SCOP classification is at 230V(400V) only in accordance with EN-14825. For heating, SCOP indicates the value of only Average heating season, Other fiche data indicates in an attached sheet.

Single -Type

1-1. Unit Specifications

PE1

5. Ducted Type S-60PN1E5A / U-60PE1E5A

INDOOR		MODEL	S-60PN1E5A							
OUTDOOR		MODEL				U-60PE1E5A				
Branch pipe		MODEL	-							
PERFORMANCE TEST CONDITION			ISO13253 / EN14511 / EN14825 / EN12102							
POWER SUPPLY		ø, Hz	1ø 50Hz			1ø 50Hz				
		V	220	230	240	220	230	240	Min	Max
COOLING	CAPACITY	kW	6.0	6.0	6.0				2.5	7.1
		BTU/h	20500	20500	20500				8500	24200
	CURRENT	A	1.12	1.08	1.04	8.20	8.00	7.80	-	-
	INPUT POWER	W	140	140	140	1.710k	1.710k	1.710k	-	-
		TOTAL W		-		1.850k	1.850k	1.850k	550	2.105k
	ANNUAL CONSUMPTION	TOTAL kWh ※4		-		-	925	-	-	-
	EER/EER CLASS	TOTAL(W/W)※5("A"~"G")	-	-	-	3.24	3.24 / A	3.24	4.55	3.37
	Erp ※6 Pdsign	kW	-	-	-	-	6.0	-		
	Erp ※6 SEER	(W/W)	-	-	-	-	5.5	-		
	Erp ※6 Annual consumption	kWh	-	-	-	-	381	-		
	Erp ※6 Class		-	-	-	-	A	-		
	POWER FACTOR	%	-	-	-	95	93	91	-	-
	NOISE INDOOR (H/M/L)	dB-A		43/41/36						
		Power Level dB		60/58/53						
	NOISE OUTDOOR (H/L)	dB-A					48/-			
		Power Level dB					65/-			
HEATING	CAPACITY	kW	7.0	7.0	7.0				2.0	8.0
		BTU/h	23900	23900	23900				6800	27300
	CURRENT	A	1.12	1.08	1.04	8.60	8.40	8.20	-	-
	INPUT POWER	W	140	140	140	1.800k	1.800k	1.800k	-	-
		TOTAL W		-		1.940k	1.940k	1.940k	500	2.585k
	COP/COP CLASS	TOTAL(W/W)※5("A"~"G")	-	-	-	3.61	3.61 / A	3.61	4.00	3.09
	Erp ※6 Pdsign	kW	-	-	-	-	5.6	-		
	Erp ※6 Tbivalen	°C	-	-	-	-	-10	-		
	Erp ※6 SCOP	(W/W)	-	-	-	-	3.8	-		
	Erp ※6 Annual consumption	kWh	-	-	-	-	2061	-		
	Erp ※6 Class		-	-	-	-	A	-		
	POWER FACTOR	%	-	-	-	95	93	91	-	-
	NOISE INDOOR (H/M/L)	dB-A		43/41/36			-		/	/
		Power Level dB		60/58/53			-			
	NOISE OUTDOOR (H/L)	dB-A		-			50/-		/	/
		Power Level dB		-			67/-			
EXTRA LOW TEMP	Total CAPACITY(kW)INPUT POWER(W)COP		-							
MAX CURRENT(A)/MAX INPUT POWER(W)			1.28/160	1.24/160	1.20/160	18.0/3.800k	18.0/3.930k	18.0/4.060k	/	
STARTING CURRENT(A)/COMP OUTPUT(W)			-	-	-	8.6/1.7k	8.4/1.7k	8.2/1.7k	/	
NETWORK IMPEDANCE (ΩMAX.)				-			-			
FM OUTPUT (W)				120			90		/	
MOISTURE REMOVAL VOLUME		L/h(Pt/h)	3.4		(7.1)		-			
External static pressure		Pa	50 (MIN10 - MAX80)							
I/D AIR FLOW	COOL	m^3/min (ft^3/min)	22/20/16 (777/706/565)							
	HEAT	m^3/min (ft^3/min)	22/20/16 (777/706/565)							
O/D AIR FLOW	COOL	m^3/min (ft^3/min)				60		(2119)		
	HEAT	m^3/min (ft^3/min)				60		(2119)		
REFRIGERANT TYPE, AMOUNT g(oz)						R410A	2.00k	(70.5)	/	
PROD IM	HEIGHT : H mm(inch)		250 (9-27/32)			996 (39-7/32)			/	
	WIDTH : W mm(inch)		1000 (+100) (39-5/16) (+3-15/16)			940 (37-1/32)			/	
	DEPTH : D mm(inch)		650 (25-19/32)			340 (13-13/32)			/	
PACK IM	HEIGHT : H mm		338			1136			/	
	WIDTH : W mm		1211			1055			/	
	DEPTH : D mm		761			485			/	
MASS	(NET) kg(lb)		32 (71)			68 (150)			/	
	(GROSS) kg(lb)		38 (84)			76 (168)			/	
LAYERS LIMIT (actually)			6 (7)			2 (3)				
Operation Condition		Cool O.D(DBT)	18°C ~ 32°C			-15°C ~ 46°C				
		Heat O.D(DBT)	16°C ~ 30°C			-20°C ~ 24°C				
PIPING	PIPE DIAMETER mm (inch)		(Liquid)ø9.52(3/8) (Gas)ø15.88(5/8)			(Liquid)ø9.52(3/8) (Gas)ø15.88(5/8)				
	CONNECT METHOD, STD LENGTH m (ft)		flared type, 5.0(16.4)			flared type, 5.0(16.4)				
	PIPE LENGTH RANGE m (ft)		5 ~ 50 (16.4 ~ 164.0)						~	~
	I/D&O/D HEIGHT DIFFERENCE m (ft)		15 (OD located lower) / 30 (OD located higher) (49.2/98.4)							
	ADD GAS AMOUNT g/m (oz/ft)		50 (0.538)							
	PIPE LENGTH FOR ADDITIONAL GAS m (ft)		30 (98.4)							

*1: In case it is necessary to indicate the air flow volume in (l/s), the value in (m^3/min.) shall be multiplied by 16.7 and rounded down the decimal point.
*2: If the EUROVENT Certified models can be operated under the extra-low temperature condition, -7°C dry bulb and -8°C wet-bulb temperatures with rated voltage 230 V shall be used.
*3: Network Impedance shall be applicable for EUROPE and CHINA models.
*4: The annual consumption is calculated by multiplying the input power at 230 V (400 V) by an average of 500 hours per year in cooling mode.
*5: EER and COP classification is at 230 V (400 V) only in accordance with EU directive 2002/31/EC.
*6: SEER and SCOP classification is at 230V(400V) only in accordance with EN-14825. For heating, SCOP indicates the value of only Average heating season, Other fiche data indicates in an attached sheet.

Simultaneous (Twin) -Type

1-1. Unit Speci□cations

PE1

5. Ducted Type S-60PN1E5A×2 / U-125PE1E5A

INDOOR		MODEL	S-60PN1E5A×2							
OUTDOOR		MODEL				U-125PE1E5A				
Branch pipe		MODEL	CZ-P155BK1							
PERFORMANCE TEST CONDITION			ISO13253 / EN14511 / EN12102							
POWER SUPPLY		ø, Hz	1ø 50Hz			1ø 50Hz				
		V	220	230	240	220	230	240	Min	Max
COOLING	CAPACITY	kW	12.5	12.5	12.5				3.3	14.0
		BTU/h	42700	42700	42700				11300	47800
	CURRENT	A	1.12×2	1.08×2	1.04×2	17.4	16.9	16.4	-	-
	INPUT POWER	W	140×2	140×2	140×2	3.665k	3.665k	3.665k	-	-
		TOTAL W		-		3.945k	3.945k	3.945k	1000	4.800k
	ANNUAL CONSUMPTION	TOTAL kWh ※4		-		-	1975	-	-	-
	EER/EER CLASS	TOTAL(W/W)※5/("A"~"G")	-	-	-	3.17	3.17 / B	3.17	3.30	2.92
	Erp ※6 Pdsign	kW	-	-	-	-	-	-		
	Erp ※6 SEER	(W/W)	-	-	-	-	-	-		
	Erp ※6 Annual consumption	kWh	-	-	-	-	-	-		
	Erp ※6 Class		-	-	-	-	-	-		
	POWER FACTOR	%	-	-	-	96	94	93	-	-
	NOISE INDOOR (H/M/L)	dB-A		43/41/36						
		Power Level dB		60/58/53						
	NOISE OUTDOOR (H/L)	dB-A					53/-			
		Power Level dB					70/-			
HEATING	CAPACITY	kW	14.0	14.0	14.0				4.1	16.0
		BTU/h	47800	47800	47800				14000	54600
	CURRENT	A	1.12×2	1.08×2	1.04×2	17.3	16.8	16.3	-	-
	INPUT POWER	W	140×2	140×2	140×2	3.655k	3.655k	3.655k	-	-
		TOTAL W		-		3.935k	3.935k	3.935k	1050	5.400k
	COP/COP CLASS	TOTAL(W/W)※5/("A"~"G")	-	-	-	3.56	3.56 / B	3.56	3.90	2.96
	Erp ※6 Pdsign	kW	-	-	-	-	-	-		
	Erp ※6 Tbivalen	°C	-	-	-	-	-	-		
	Erp ※6 SCOP	(W/W)	-	-	-	-	-	-		
	Erp ※6 Annual consumption	kWh	-	-	-	-	-	-		
	Erp ※6 Class		-	-	-	-	-	-		
	POWER FACTOR	%	-	-	-	96	95	93	-	-
	NOISE INDOOR (H/M/L)	dB-A		43/41/36			-		/	/
		Power Level dB		60/58/53			-			
	NOISE OUTDOOR (H/L)	dB-A		-			53/-		/	/
		Power Level dB		-			70/-			
EXTRA LOW TEMP	Total CAPACITY(kW)/INPUT POWER(W)/COP		-							
MAX CURRENT(A)/MAX INPUT POWER(W)			1.28×2/160×2	1.24×2/160×2	1.20×2/160×2	28.0/6.000k	28.0/6.200k	28.0/6.400k	/	
STARTING CURRENT(A)/COMP OUTPUT(W)			-	-	-	17.4/3.0k	16.9/3.0k	16.4/3.0k	/	
NETWORK IMPEDANCE (ΩMAX.)				-			-			
FM OUTPUT (W)				120×2			90×2		/	
MOISTURE REMOVAL VOLUME		L/h(Pt/h)	7.9	(3.95×2)	(16.6)		-			
External static pressure		Pa	50 (MIN10 - MAX80)							
I/D AIR FLOW	COOL	m^3/min (ft^3/min)	[22/20/16 (777/706/565)]×2							
	HEAT	m^3/min (ft^3/min)	[22/20/16 (777/706/565)]×2							
O/D AIR FLOW	COOL	m^3/min (ft^3/min)				130		(4591)		
	HEAT	m^3/min (ft^3/min)				110		(3885)		
REFRIGERANT TYPE, AMOUNT g(oz)						R410A	3.40k	(119.9)	/	
PROD IM	HEIGHT : H mm(inch)		250 (9-27/32)			1416 (55-3/4)			/	
	WIDTH : W mm(inch)		1000 (+100) (39-5/16) (+3-15/16)			940 (37-1/32)			/	
	DEPTH : D mm(inch)		650 (25-19/32)			340 (13-13/32)			/	
PACK IM	HEIGHT : H mm		338			1556			/	
	WIDTH : W mm		1211			1055			/	
	DEPTH : D mm		761			485			/	
MASS	(NET) kg(lb)		32 (71)			98 (216)			/	
	(GROSS) kg(lb)		38 (84)			108 (238)			/	
LAYERS LIMIT (actually)			6 (7)			1 (2)				
Operation Condition		Cool O.D(DBT)	18°C ~ 32°C			-15°C ~ 46°C				
		Heat O.D(DBT)	16°C ~ 30°C			-20°C ~ 24°C				
PIPING	PIPE DIAMETER mm (inch)		(Liquid)ø9.52(3/8) (Gas)ø15.88(5/8)			(Liquid)ø9.52(3/8) (Gas)ø15.88(5/8)				
	CONNECT METHOD, STD LENGTH m (ft)		flared type, 5.0(16.4)			flared type, 5.0(16.4)				
	PIPE LENGTH RANGE m (ft)		5 ~ 75 (16.4 ~ 246.1)						~	~
	I/D&O/D HEIGHT DIFFERENCE m (ft)		15 (OD located lower) / 30 (OD located higher) (49.2/98.4)							
	ADD GAS AMOUNT g/m (oz/ft)		50 (0.538)							
	PIPE LENGTH FOR ADDITIONAL GAS m (ft)		30 (98.4)							

*1: In case it is necessary to indicate the air □ow volume in (l/s), the value in (m^3/min.) shall be multiplied by 16.7 and rounded down the decimal point.
*2: If the EUROVENT Certi□ed models can be operated under the □extra-low□temperature condition, -7□C dry bulb and -8□C wet-bulb temperatures with rated voltage 230 V shall be used.
*3: Network Impedance shall be applicable for EUROPE and CHINA models.
*4: The annual consumption is calculated by multiplying the input power at 230 V (400 V) by an average of 500 hours per year in cooling mode.
*5: EER and COP classification is at 230 V (400 V) only in accordance with EU directive 2002/31/EC.
*6: SEER and SCOP classification is at 230V(400V) only in accordance with EN-14825. For heating, SCOP indicates the value of only Average heating season, Other fiche data indicates in an attached sheet.

Single -Type

1-1. Unit Speci□cations

PE1

5. Ducted Type S-71PN1E5A / U-71PE1E5A

INDOOR		MODEL	S-71PN1E5A							
OUTDOOR		MODEL				U-71PE1E5A				
Branch pipe		MODEL				-				
PERFORMANCE TEST CONDITION			ISO13253 / EN14511 / EN14825 / EN12102							
POWER SUPPLY		ø, Hz	1ø 50Hz			1ø 50Hz				
		V	220	230	240	220	230	240	Min	Max
COOLING	CAPACITY	kW	7.1	7.1	7.1				2.5	8.0
		BTU/h	24200	24200	24200				8500	27300
	CURRENT	A	1.12	1.08	1.04	9.70	9.40	9.20	-	-
	INPUT POWER	W	140	140	140	2.010k	2.010k	2.010k	-	-
		TOTAL W		-		2.150k	2.150k	2.150k	550	2.750k
	ANNUAL CONSUMPTION	TOTAL kWh ※4		-		-	1075	-	-	-
	EER/EER CLASS	TOTAL(W/W)※5("A"~"G")	-	-	-	3.30	3.30 / A	3.30	4.55	2.91
	Erp ※6 Pdsign	kW	-	-	-	-	7.1	-		
	Erp ※6 SEER	(W/W)	-	-	-	-	5.5	-		
	Erp ※6 Annual consumption	kWh	-	-	-	-	448	-		
	Erp ※6 Class		-	-	-	-	A	-		
	POWER FACTOR	%	-	-	-	94	93	91	-	-
	NOISE INDOOR (H/M/L)	dB-A		43/41/36						
		Power Level dB		60/58/53						
	NOISE OUTDOOR (H/L)	dB-A					48/-			
		Power Level dB					65/-			
HEATING	CAPACITY	kW	8.0	8.0	8.0				2.0	9.0
		BTU/h	27300	27300	27300				6800	30700
	CURRENT	A	1.12	1.08	1.04	10.2	9.90	9.70	-	-
	INPUT POWER	W	140	140	140	2.120k	2.120k	2.120k	-	-
		TOTAL W		-		2.260k	2.260k	2.260k	500	2.920k
	COP/COP CLASS	TOTAL(W/W)※5("A"~"G")	-	-	-	3.54	3.54 / B	3.54	4.00	3.08
	Erp ※6 Pdsign	kW	-	-	-	-	6.2	-		
	Erp ※6 Tbivalen	°C	-	-	-	-	-9	-		
	Erp ※6 SCOP	(W/W)	-	-	-	-	3.8	-		
	Erp ※6 Annual consumption	kWh	-	-	-	-	2284	-		
	Erp ※6 Class		-	-	-	-	A	-		
	POWER FACTOR	%	-	-	-	94	93	91	-	-
	NOISE INDOOR (H/M/L)	dB-A		43/41/36			-		/	/
		Power Level dB		60/58/53			-			
	NOISE OUTDOOR (H/L)	dB-A		-			50/-		/	/
		Power Level dB		-			67/-			
EXTRA LOW TEMP	Total CAPACITY(kW)/INPUT POWER(W)/COP					-				
MAX CURRENT(A)/MAX INPUT POWER(W)			1.28/160	1.24/160	1.20/160	18.0/3.800k	18.0/3.930k	18.0/4.060k	/	
STARTING CURRENT(A)/COMP OUTPUT(W)			-	-	-	10.2/2.0k	9.9/2.0k	9.7/2.0k	/	
NETWORK IMPEDANCE (ΩMAX.)				-			-			
FM OUTPUT (W)				120			90		/	
MOISTURE REMOVAL VOLUME		L/h(Pt/h)	4.2		(8.8)		-			
External static pressure		Pa		50 (MIN10 - MAX80)						
I/D AIR FLOW	COOL	m^3/min (ft^3/min)		22/20/16 (777/706/565)						
	HEAT	m^3/min (ft^3/min)		22/20/16 (777/706/565)						
O/D AIR FLOW	COOL	m^3/min (ft^3/min)				60		(2119)		
	HEAT	m^3/min (ft^3/min)				60		(2119)		
REFRIGERANT TYPE, AMOUNT g(oz)						R410A	2.35k	(82.9)	/	
PROD DIM	HEIGHT : H mm(inch)			250 (9-27/32)			996 (39-7/32)		/	
	WIDTH : W mm(inch)			1000 (+100) (39-5/16) (+3-15/16)			940 (37-1/32)		/	
	DEPTH : D mm(inch)			650 (25-19/32)			340 (13-13/32)		/	
PACK DIM	HEIGHT : H mm			338			1136		/	
	WIDTH : W mm			1211			1055		/	
	DEPTH : D mm			761			485		/	
MASS	(NET) kg(lb)			32 (71)			69 (152)		/	
	(GROSS) kg(lb)			38 (84)			77 (170)		/	
LAYERS LIMIT (actually)				6 (7)			2 (3)			
Operation Condition		Cool O.D(DBT)		18°C ~ 32°C			-15°C ~ 46°C			
		Heat O.D(DBT)		16°C ~ 30°C			-20°C ~ 24°C			
PIPING	PIPE DIAMETER mm (inch)			(Liquid)ø9.52(3/8) (Gas)ø15.88(5/8)			(Liquid)ø9.52(3/8) (Gas)ø15.88(5/8)			
	CONNECT METHOD, STD LENGTH m (ft)			flared type, 5.0(16.4)			flared type, 5.0(16.4)			
	PIPE LENGTH RANGE m (ft)			5 ~ 50 (16.4 ~ 164.0)					~	~
	I/D&O/D HEIGHT DIFFERENCE m (ft)			15 (OD located lower) / 30 (OD located higher) (49.2/98.4)						
	ADD GAS AMOUNT g/m (oz/ft)			50 (0.538)						
	PIPE LENGTH FOR ADDITIONAL GAS m (ft)			30 (98.4)						

*1: In case it is necessary to indicate the air □ow volume in (l/s), the value in (m^3/min.) shall be multiplied by 16.7 and rounded down the decimal point.
*2: If the EUROVENT Certi□ed models can be operated under the □extra-low□temperature condition, -7□C dry bulb and -8□C wet-bulb temperatures with rated voltage 230 V shall be used.
*3: Network Impedance shall be applicable for EUROPE and CHINA models.
*4: The annual consumption is calculated by multiplying the input power at 230 V (400 V) by an average of 500 hours per year in cooling mode.
*5: EER and COP classification is at 230 V (400 V) only in accordance with EU directive 2002/31/EC.
*6: SEER and SCOP classification is at 230V(400V) only in accordance with EN-14825. For heating, SCOP indicates the value of only Average heating season, Other fiche data indicates in an attached sheet.

Simultaneous (Twin) -Type

1-1. Unit Speci□cations

PE1

5. Ducted Type S-71PN1E5A×2 / U-140PE1E5A

INDOOR		MODEL	S-71PN1E5A×2							
OUTDOOR		MODEL				U-140PE1E5A				
Branch pipe		MODEL	CZ-P155BK1							
PERFORMANCE TEST CONDITION			ISO13253 / EN14511 / EN12102							
POWER SUPPLY		ø, Hz	1ø 50Hz			1ø 50Hz				
		V	220	230	240	220	230	240	Min	Max
COOLING	CAPACITY	kW	14.0	14.0	14.0				3.3	15.5
		BTU/h	47800	47800	47800				11300	52900
	CURRENT	A	1.12×2	1.08×2	1.04×2	20.5	20.1	19.5	-	-
	INPUT POWER	W	140×2	140×2	140×2	4.400k	4.400k	4.400k	-	-
		TOTAL W		-		4.680k	4.680k	4.680k	1000	6.200k
	ANNUAL CONSUMPTION	TOTAL kWh ※4		-		-	2340	-	-	-
	EER/EER CLASS	TOTAL(W/W)※5/("A"~"G")	-	-	-	2.99	2.99 / C	2.99	3.30	2.50
	Erp ※6 Pdsign	kW	-	-	-	-	-	-		
	Erp ※6 SEER	(W/W)	-	-	-	-	-	-		
	Erp ※6 Annual consumption	kWh	-	-	-	-	-	-		
	Erp ※6 Class		-	-	-	-	-	-		
	POWER FACTOR	%	-	-	-	98	95	94	-	-
	NOISE INDOOR (H/M/L)	dB-A		43/41/36						
		Power Level dB		60/58/53						
	NOISE OUTDOOR (H/L)	dB-A					54/-			
		Power Level dB					71/-			
HEATING	CAPACITY	kW	16.0	16.0	16.0				4.1	18.0
		BTU/h	54600	54600	54600				14000	61400
	CURRENT	A	1.12×2	1.08×2	1.04×2	20.6	20.2	19.6	-	-
	INPUT POWER	W	140×2	140×2	140×2	4.440k	4.440k	4.440k	-	-
		TOTAL W		-		4.720k	4.720k	4.720k	1050	6.100k
	COP/COP CLASS	TOTAL(W/W)※5/("A"~"G")	-	-	-	3.39	3.39 / C	3.39	3.90	2.95
	Erp ※6 Pdsign	kW	-	-	-	-	-	-		
	Erp ※6 Tbivalen	°C	-	-	-	-	-	-		
	Erp ※6 SCOP	(W/W)	-	-	-	-	-	-		
	Erp ※6 Annual consumption	kWh	-	-	-	-	-	-		
	Erp ※6 Class		-	-	-	-	-	-		
	POWER FACTOR	%	-	-	-	98	96	94	-	-
	NOISE INDOOR (H/M/L)	dB-A		43/41/36			-		/	/
		Power Level dB		60/58/53			-			
	NOISE OUTDOOR (H/L)	dB-A		-			55/-		/	/
		Power Level dB		-			71/-			
EXTRA LOW TEMP	Total CAPACITY(kW)/INPUT POWER(W)/COP					-				
MAX CURRENT(A)/MAX INPUT POWER(W)			1.28×2/160×2	1.24×2/160×2	1.20×2/160×2	30.0/6.450k	30.0/6.650k	30.0/6.850k	/	
STARTING CURRENT(A)/COMP OUTPUT(W)			-	-	-	20.6/3.0k	20.2/3.0k	19.6/3.0k	/	
NETWORK IMPEDANCE (ΩMAX.)				-			-			
FM OUTPUT (W)				120×2			90×2		/	
MOISTURE REMOVAL VOLUME		L/h(Pt/h)	9.0	(4.5×2)	(18.9)		-			
External static pressure		Pa		50 (MIN10 - MAX80)						
I/D AIR FLOW	COOL	m^3/min (ft^3/min)		[22/20/16 (777/706/565)]×2						
	HEAT	m^3/min (ft^3/min)		[22/20/16 (777/706/565)]×2						
O/D AIR FLOW	COOL	m^3/min (ft^3/min)					135	(4767)		
	HEAT	m^3/min (ft^3/min)					120	(4238)		
REFRIGERANT TYPE, AMOUNT g(oz)						R410A	3.40k	(119.9)	/	
PROD IM	HEIGHT : H mm(inch)			250 (9-27/32)			1416 (55-3/4)		/	
	WIDTH : W mm(inch)			1000 (+100) (39-5/16) (+3-15/16)			940 (37-1/32)		/	
	DEPTH : D mm(inch)			650 (25-19/32)			340 (13-13/32)		/	
PACK IM	HEIGHT : H mm			338			1556		/	
	WIDTH : W mm			1211			1055		/	
	DEPTH : D mm			761			485		/	
MASS	(NET) kg(lb)			32 (71)			98 (216)		/	
	(GROSS) kg(lb)			38 (84)			108 (238)		/	
LAYERS LIMIT (actually)				6 (7)			1 (2)			
Operation Condition		Cool O.D(DBT)		18°C ~ 32°C			-15°C ~ 46°C			
		Heat O.D(DBT)		16°C ~ 30°C			-20°C ~ 24°C			
PIPING	PIPE DIAMETER mm (inch)			(Liquid)ø9.52(3/8) (Gas)ø15.88(5/8)			(Liquid)ø9.52(3/8) (Gas)ø15.88(5/8)			
	CONNECT METHOD, STD LENGTH m (ft)			flared type, 5.0(16.4)			flared type, 5.0(16.4)			
	PIPE LENGTH RANGE m (ft)			5 ~ 75 (16.4 ~ 246.1)					~	~
	I/D&O/D HEIGHT DIFFERENCE m (ft)			15 (OD located lower) / 30 (OD located higher) (49.2/98.4)						
	ADD GAS AMOUNT g/m (oz/ft)			50 (0.538)						
	PIPE LENGTH FOR ADDITIONAL GAS m (ft)			30 (98.4)						

*1: In case it is necessary to indicate the air □ow volume in (l/s), the value in (m^3/min.) shall be multiplied by 16.7 and rounded down the decimal point.
*2: If the EUROVENT Certi□ed models can be operated under the □extra-low□temperature condition, -7□C dry bulb and -8□C wet-bulb temperatures with rated voltage 230 V shall be used.
*3: Network Impedance shall be applicable for EUROPE and CHINA models.
*4: The annual consumption is calculated by multiplying the input power at 230 V (400 V) by an average of 500 hours per year in cooling mode.
*5: EER and COP classification is at 230 V (400 V) only in accordance with EU directive 2002/31/EC.
*6: SEER and SCOP classification is at 230V(400V) only in accordance with EN-14825. For heating, SCOP indicates the value of only Average heating season, Other fiche data indicates in an attached sheet.

Single -Type

1-1. Unit Specifications

PE1

5. Ducted Type S-100PN1E5A / U-100PE1E5A

INDOOR		MODEL	S-100PN1E5A							
OUTDOOR		MODEL				U-100PE1E5A				
Branch pipe		MODEL				-				
PERFORMANCE TEST CONDITION			ISO13253 / EN14511 / EN14825 / EN12102							
POWER SUPPLY		ø, Hz	1ø 50Hz			1ø 50Hz				
		V	220	230	240	220	230	240	Min	Max
COOLING	CAPACITY	kW	10.0	10.0	10.0				3.3	12.5
		BTU/h	34100	34100	34100				11300	42700
	CURRENT	A	1.54	1.48	1.42	11.6	11.2	10.9	-	-
	INPUT POWER	W	205	205	205	2.465k	2.465k	2.465k	-	-
		TOTAL W		-		2.670k	2.670k	2.670k	870	3.800k
	ANNUAL CONSUMPTION	TOTAL kWh ※4		-		-	1335	-	-	-
	EER/EER CLASS	TOTAL(W/W)※5("A"~"G")	-	-	-	3.75	3.75 / A	3.75	3.79	3.29
	Erp ※6 Pdsign	kW	-	-	-	-	10.0	-		
	Erp ※6 SEER	(W/W)	-	-	-	-	5.9	-		
	Erp ※6 Annual consumption	kWh	-	-	-	-	589	-		
	Erp ※6 Class		-	-	-	-	A+	-		
	POWER FACTOR	%	-	-	-	97	96	94	-	-
	NOISE INDOOR (H/M/L)	dB-A		44/42/37			-			
		Power Level dB		65/63/58			-			
	NOISE OUTDOOR (H/L)	dB-A					52/-			
		Power Level dB					69/-			
HEATING	CAPACITY	kW	11.2	11.2	11.2				4.1	14.0
		BTU/h	38200	38200	38200				14000	47800
	CURRENT	A	1.54	1.48	1.42	12.8	12.5	12.2	-	-
	INPUT POWER	W	205	205	205	2.745k	2.745k	2.745k	-	-
		TOTAL W		-		2.950k	2.950k	2.950k	980	4.500k
	COP/COP CLASS	TOTAL(W/W)※5("A"~"G")	-	-	-	3.80	3.80 / A	3.80	4.18	3.11
	Erp ※6 Pdsign	kW	-	-	-	-	10.0	-		
	Erp ※6 Tbivalen	°C	-	-	-	-	-10	-		
	Erp ※6 SCOP	(W/W)	-	-	-	-	3.9	-		
	Erp ※6 Annual consumption	kWh	-	-	-	-	3590	-		
	Erp ※6 Class		-	-	-	-	A	-		
	POWER FACTOR	%	-	-	-	97	95	94	-	-
	NOISE INDOOR (H/M/L)	dB-A		44/42/37			-		/	/
		Power Level dB		65/63/58			-			
	NOISE OUTDOOR (H/L)	dB-A		-			52/-		/	/
		Power Level dB		-			69/-			
EXTRA LOW TEMP	Total CAPACITY(kW)/INPUT POWER(W)/COP					-				
MAX CURRENT(A)/MAX INPUT POWER(W)			2.13/275	2.07/275	2.01/275	25.0/5.350k	25.0/5.550k	25.0/5.750k	/	
STARTING CURRENT(A)/COMP OUTPUT(W)			-	-	-	12.8/3.0k	12.5/3.0k	12.2/3.0k	/	
NETWORK IMPEDANCE (ΩMAX.)				-			-			
FM OUTPUT (W)				200			90×2		/	
MOISTURE REMOVAL VOLUME		L/h(Pt/h)	6.0		(12.6)		-			
External static pressure		Pa		50 (MIN10 - MAX80)						
I/D AIR FLOW	COOL	m^3/min (ft^3/min)		36/33/26 (1271/1165/918)						
	HEAT	m^3/min (ft^3/min)		36/33/26 (1271/1165/918)						
O/D AIR FLOW	COOL	m^3/min (ft^3/min)				110		(3885)		
	HEAT	m^3/min (ft^3/min)				95		(3355)		
REFRIGERANT TYPE, AMOUNT g(oz)						R410A	3.40k	(119.9)	/	
PROD DIM	HEIGHT : H mm(inch)			250 (9-27/32)			1416 (55-3/4)		/	
	WIDTH : W mm(inch)			1200 (+100) (47-1/4) (+3-15/16)			940 (37-1/32)		/	
	DEPTH : D mm(inch)			650 (25-19/32)			340 (13-13/32)		/	
PACK DIM	HEIGHT : H mm			338			1556		/	
	WIDTH : W mm			1402			1055		/	
	DEPTH : D mm			761			485		/	
MASS	(NET) kg(lb)			41 (91)			98 (216)		/	
	(GROSS) kg(lb)			48 (106)			108 (238)		/	
LAYERS LIMIT (actually)				6 (7)			1 (2)			
Operation Condition		Cool O.D(DBT)		18°C ~ 32°C			-15°C ~ 46°C			
		Heat O.D(DBT)		16°C ~ 30°C			-20°C ~ 24°C			
PIPING	PIPE DIAMETER mm (inch)		(Liquid)ø9.52(3/8) (Gas)ø15.88(5/8)			(Liquid)ø9.52(3/8) (Gas)ø15.88(5/8)				
	CONNECT METHOD, STD LENGTH m (ft)		flared type, 5.0(16.4)			flared type, 5.0(16.4)				
	PIPE LENGTH RANGE m (ft)			5 ~ 75 (16.4 ~ 246.1)					~	~
	I/D&O/D HEIGHT DIFFERENCE m (ft)		15 (OD located lower) / 30 (OD located higher) (49.2/98.4)							
	ADD GAS AMOUNT g/m (oz/ft)			50 (0.538)						
	PIPE LENGTH FOR ADDITIONAL GAS m (ft)			30 (98.4)						

*1: In case it is necessary to indicate the air flow volume in (l/s), the value in (m^3/min.) shall be multiplied by 16.7 and rounded down the decimal point.
*2: If the EUROVENT Certified models can be operated under the extra-low temperature condition, -7°C dry bulb and -8°C wet-bulb temperatures with rated voltage 230 V shall be used.
*3: Network Impedance shall be applicable for EUROPE and CHINA models.
*4: The annual consumption is calculated by multiplying the input power at 230 V (400 V) by an average of 500 hours per year in cooling mode.
*5: EER and COP classification is at 230 V (400 V) only in accordance with EU directive 2002/31/EC.
*6: SEER and SCOP classification is at 230V(400V) only in accordance with EN-14825. For heating, SCOP indicates the value of only Average heating season, Other fiche data indicates in an attached sheet.

Single -Type

1-1. Unit Speci□cations

PE1

5. Ducted Type S-125PN1E5A / U-125PE1E5A

INDOOR		MODEL	S-125PN1E5A							
OUTDOOR		MODEL				U-125PE1E5A				
Branch pipe		MODEL				-				
PERFORMANCE TEST CONDITION			ISO13253 / EN14511 / EN12102							
POWER SUPPLY		ø, Hz	1ø 50Hz			1ø 50Hz				
		V	220	230	240	220	230	240	Min	Max
COOLING	CAPACITY	kW	12.5	12.5	12.5				3.3	14.0
		BTU/h	42700	42700	42700				11300	47800
	CURRENT	A	1.74	1.67	1.61	17.4	16.9	16.4	-	-
	INPUT POWER	W	225	225	225	3.665k	3.665k	3.665k	-	-
		TOTAL W		-		3.890k	3.890k	3.890k	1000	4.800k
	ANNUAL CONSUMPTION	TOTAL kWh ※4		-		-	1945	-	-	-
	EER/EER CLASS	TOTAL(W/W)※5("A"~"G")	-	-	-	3.21	3.21 / A	3.21	3.30	2.92
	Erp ※6 Pdsign	kW	-	-	-	-	-	-		
	Erp ※6 SEER	(W/W)	-	-	-	-	-	-		
	Erp ※6 Annual consumption	kWh	-	-	-	-	-	-		
	Erp ※6 Class		-	-	-	-	-	-		
	POWER FACTOR	%	-	-	-	96	94	93	-	-
	NOISE INDOOR (H/M/L)	dB-A		45/43/38			-			
		Power Level dB		66/64/59			-			
	NOISE OUTDOOR (H/L)	dB-A					53/-			
		Power Level dB					70/-			
HEATING	CAPACITY	kW	14.0	14.0	14.0				4.1	16.0
		BTU/h	47800	47800	47800				14000	54600
	CURRENT	A	1.74	1.67	1.61	17.3	16.8	16.3	-	-
	INPUT POWER	W	225	225	225	3.655k	3.665k	3.655k	-	-
		TOTAL W		-		3.880k	3.880k	3.880k	1050	5.400k
	COP/COP CLASS	TOTAL(W/W)※5("A"~"G")	-	-	-	3.61	3.61 / A	3.61	3.90	2.96
	Erp ※6 Pdsign	kW	-	-	-	-	-	-		
	Erp ※6 Tbivalen	°C	-	-	-	-	-	-		
	Erp ※6 SCOP	(W/W)	-	-	-	-	-	-		
	Erp ※6 Annual consumption	kWh	-	-	-	-	-	-		
	Erp ※6 Class		-	-	-	-	-	-		
	POWER FACTOR	%	-	-	-	96	95	93	-	-
	NOISE INDOOR (H/M/L)	dB-A		45/43/38			-		/	/
		Power Level dB		66/64/59			-			
	NOISE OUTDOOR (H/L)	dB-A		-			53/-		/	/
		Power Level dB		-			70/-			
EXTRA LOW TEMP	Total CAPACITY(kW)/INPUT POWER(W)/COP					-				
MAX CURRENT(A)/MAX INPUT POWER(W)			2.36/300	2.30/300	2.24/300	28.0/6.000k	28.0/6.200k	28.0/6.400k	/	
STARTING CURRENT(A)/COMP OUTPUT(W)			-	-	-	17.4/3.0k	16.9/3.0k	16.4/3.0k	/	
NETWORK IMPEDANCE (ΩMAX.)				-			-			
FM OUTPUT (W)				200			90×2		/	
MOISTURE REMOVAL VOLUME		L/h(Pt/h)	7.9		(16.6)		-			
External static pressure		Pa	50 (MIN10 - MAX80)							
I/D AIR FLOW	COOL	m^3/min (ft^3/min)	38/35/28 (1342/1236/989)							
	HEAT	m^3/min (ft^3/min)	38/35/28 (1342/1236/989)							
O/D AIR FLOW	COOL	m^3/min (ft^3/min)				130		(4591)		
	HEAT	m^3/min (ft^3/min)				110		(3885)		
REFRIGERANT TYPE, AMOUNT g(oz)						R410A	3.40k	(119.9)	/	
PROD IM	HEIGHT : H mm(inch)		250 (9-27/32)			1416 (55-3/4)			/	
	WIDTH : W mm(inch)		1200 (+100) (47-1/4) (+3-15/16)			940 (37-1/32)			/	
	DEPTH : D mm(inch)		650 (25-19/32)			340 (13-13/32)			/	
PACK DIM	HEIGHT : H mm		338			1556			/	
	WIDTH : W mm		1402			1055			/	
	DEPTH : D mm		761			485			/	
MASS	(NET) kg(lb)		41 (91)			98 (216)			/	
	(GROSS) kg(lb)		48 (106)			108 (238)			/	
LAYERS LIMIT (actually)			6 (7)			1 (2)				
Operation Condition		Cool O.D(DBT)	18°C ~ 32°C			-15°C ~ 46°C				
		Heat O.D(DBT)	16°C ~ 30°C			-20°C ~ 24°C				
PIPING	PIPE DIAMETER mm (inch)		(Liquid)ø9.52(3/8) (Gas)ø15.88(5/8)			(Liquid)ø9.52(3/8) (Gas)ø15.88(5/8)				
	CONNECT METHOD, STD LENGTH m (ft)		flared type, 5.0(16.4)			flared type, 5.0(16.4)				
	PIPE LENGTH RANGE m (ft)		5 ~ 75 (16.4 ~ 246.1)						~	~
	I/D&O/D HEIGHT DIFFERENCE m (ft)		15 (OD located lower) / 30 (OD located higher) (49.2/98.4)							
	ADD GAS AMOUNT g/m (oz/ft)		50 (0.538)							
	PIPE LENGTH FOR ADDITIONAL GAS m (ft)		30 (98.4)							

*1: In case it is necessary to indicate the air □ow volume in (l/s), the value in (m^3/min.) shall be multiplied by 16.7 and rounded down the decimal point.
*2: If the EUROVENT Certi□ed models can be operated under the □extra-low□temperature condition, -7□C dry bulb and -8□C wet-bulb temperatures with rated voltage 230 V shall be used.
*3: Network Impedance shall be applicable for EUROPE and CHINA models.
*4: The annual consumption is calculated by multiplying the input power at 230 V (400 V) by an average of 500 hours per year in cooling mode.
*5: EER and COP classification is at 230 V (400 V) only in accordance with EU directive 2002/31/EC.
*6: SEER and SCOP classification is at 230V(400V) only in accordance with EN-14825. For heating, SCOP indicates the value of only Average heating season, Other fiche data indicates in an attached sheet.

Single -Type

1-1. Unit Speci□cations

PE1

5. Ducted Type S-140PN1E5A / U-140PE1E5A

INDOOR		MODEL	S-140PN1E5A							
OUTDOOR		MODEL				U-140PE1E5A				
Branch pipe		MODEL				-				
PERFORMANCE TEST CONDITION			ISO13253 / EN14511 / EN12102							
POWER SUPPLY		ø, Hz	1ø 50Hz			1ø 50Hz				
		V	220	230	240	220	230	240	Min	Max
COOLING	CAPACITY	kW	14.0	14.0	14.0				3.3	15.5
		BTU/h	47800	47800	47800				11300	52900
	CURRENT	A	1.89	1.82	1.74	20.5	20.1	19.5	-	-
	INPUT POWER	W	250	250	250	4.400k	4.400k	4.400k	-	-
		TOTAL W		-		4.650k	4.650k	4.650k	1000	6.200k
	ANNUAL CONSUMPTION	TOTAL kWh ※4		-		-	2325	-	-	-
	EER/EER CLASS	TOTAL(W/W)※5("A"~"G")	-	-	-	3.01	3.01 / B	3.01	3.30	2.50
	Erp ※6 Pdsign	kW	-	-	-	-	-	-		
	Erp ※6 SEER	(W/W)	-	-	-	-	-	-		
	Erp ※6 Annual consumption	kWh	-	-	-	-	-	-		
	Erp ※6 Class		-	-	-	-	-	-		
	POWER FACTOR	%	-	-	-	98	95	94	-	-
	NOISE INDOOR (H/M/L)	dB-A		46/44/39			-			
		Power Level dB		67/65/60			-			
	NOISE OUTDOOR (H/L)	dB-A					54/-			
		Power Level dB					71/-			
HEATING	CAPACITY	kW	16.0	16.0	16.0				4.1	18.0
		BTU/h	54600	54600	54600				14000	61400
	CURRENT	A	1.89	1.82	1.74	20.6	20.2	19.6	-	-
	INPUT POWER	W	250	250	250	4.440k	4.440k	4.440k	-	-
		TOTAL W		-		4.690k	4.690k	4.690k	1050	6.100k
	COP/COP CLASS	TOTAL(W/W)※5("A"~"G")	-	-	-	3.41	3.41 / B	3.41	3.90	2.95
	Erp ※6 Pdsign	kW	-	-	-	-	-	-		
	Erp ※6 Tbivalen	°C	-	-	-	-	-	-		
	Erp ※6 SCOP	(W/W)	-	-	-	-	-	-		
	Erp ※6 Annual consumption	kWh	-	-	-	-	-	-		
	Erp ※6 Class		-	-	-	-	-	-		
	POWER FACTOR	%	-	-	-	98	96	94	-	-
	NOISE INDOOR (H/M/L)	dB-A		46/44/39			-		/	/
		Power Level dB		67/65/60			-			
	NOISE OUTDOOR (H/L)	dB-A		-			55/-		/	/
		Power Level dB		-			71/-			
EXTRA LOW TEMP	Total CAPACITY(kW)INPUT POWER(W)COP					-				
MAX CURRENT(A)/MAX INPUT POWER(W)			2.59/345	2.53/345	2.47/345	30.0/6.450k	30.0/6650k	30.0/6850k	/	
STARTING CURRENT(A)/COMP OUTPUT(W)			-	-	-	20.6/3.0k	20.2/3.0k	19.6/3.0k	/	
NETWORK IMPEDANCE (ΩMAX.)				-			-			
FM OUTPUT (W)				200			90×2		/	
MOISTURE REMOVAL VOLUME		L/h(Pt/h)	9.0		(18.9)		-			
External static pressure		Pa	50 (MIN10 - MAX80)							
I/D AIR FLOW	COOL	m³/min (ft³/min)	40/37/30 (1413/1307/1059)							
	HEAT	m³/min (ft³/min)	40/37/30 (1413/1307/1059)							
O/D AIR FLOW	COOL	m³/min (ft³/min)				135		(4767)		
	HEAT	m³/min (ft³/min)				120		(4238)		
REFRIGERANT TYPE, AMOUNT g(oz)						R410A	3.40k	(119.9)	/	
PROD IM	HEIGHT : H mm(inch)		250 (9-27/32)			1416 (55-3/4)			/	
	WIDTH : W mm(inch)		1200 (+100) (47-1/4) (+3-15/16)			940 (37-1/32)			/	
	DEPTH : D mm(inch)		650 (25-19/32)			340 (13-13/32)			/	
PACK DIM	HEIGHT : H mm		338			1556			/	
	WIDTH : W mm		1402			1055			/	
	DEPTH : D mm		761			485			/	
MASS	(NET) kg(lb)		41 (91)			98 (216)			/	
	(GROSS) kg(lb)		48 (106)			108 (238)			/	
LAYERS LIMIT (actually)			6 (7)			1 (2)				
Operation Condition		Cool O.D(DBT)	18°C ~ 32°C			-15°C ~ 46°C				
		Heat O.D(DBT)	16°C ~ 30°C			-20°C ~ 24°C				
PIPING	PIPE DIAMETER mm (inch)		(Liquid)ø9.52(3/8) (Gas)ø15.88(5/8)			(Liquid)ø9.52(3/8) (Gas)ø15.88(5/8)				
	CONNECT METHOD, STD LENGTH m (ft)		flared type, 5.0(16.4)			flared type, 5.0(16.4)				
	PIPE LENGTH RANGE m (ft)		5 ~ 75 (16.4 ~ 246.1)						~	~
	I/D&O/D HEIGHT DIFFERENCE m (ft)		15 (OD located lower) / 30 (OD located higher) (49.2/98.4)							
	ADD GAS AMOUNT g/m (oz/ft)		50 (0.538)							
	PIPE LENGTH FOR ADDITIONAL GAS m (ft)		30 (98.4)							

*1: In case it is necessary to indicate the air □ow volume in (l/s), the value in (m^3/min.) shall be multiplied by 16.7 and rounded down the decimal point.
*2: If the EUROVENT Certi□ed models can be operated under the □extra-low□temperature condition, -7□C dry bulb and -8□C wet-bulb temperatures with rated voltage 230 V shall be used.
*3: Network Impedance shall be applicable for EUROPE and CHINA models.
*4: The annual consumption is calculated by multiplying the input power at 230 V (400 V) by an average of 500 hours per year in cooling mode.
*5: EER and COP classification is at 230 V (400 V) only in accordance with EU directive 2002/31/EC.
*6: SEER and SCOP classification is at 230V(400V) only in accordance with EN-14825. For heating, SCOP indicates the value of only Average heating season, Other fiche data indicates in an attached sheet.

Simultaneous (Twin) -Type

1-1. Unit Specifications

PE1

5. Ducted Type S-36PN1E5A×2 / U-71PE1E8A

INDOOR		MODEL	S-36PN1E5A×2							
OUTDOOR		MODEL				U-71PE1E8A				
Branch pipe		MODEL	CZ-P155BK1							
PERFORMANCE TEST CONDITION			ISO13253 / EN14511 / EN14825 / EN12102							
POWER SUPPLY		ø, Hz	1ø 50Hz			3ø 50Hz				
		V	220	230	240	380	400	415	Min	Max
COOLING	CAPACITY	kW	7.1	7.1	7.1				2.5	8.0
		BTU/h	24200	24200	24200				8500	27300
	CURRENT	A	0.42×2	0.43×2	0.44×2	3.25	3.10	3.00	-	-
	INPUT POWER	W	90×2	94×2	98×2	2.010k	2.012k	2.014k	-	-
		TOTAL W		-		2.190k	2.200k	2.210k	660	2.750k
	ANNUAL CONSUMPTION	TOTAL kWh ※4		-		-	1100	-	-	-
	EER/EER CLASS	TOTAL(W/W)※5("A"~"G")	-	-	-	3.24	3.23 / A	3.21	3.79	2.91
	Erp ※6 Pdsign	kW	-	-	-	-	7.1	-		
	Erp ※6 SEER	(W/W)	-	-	-	-	4.7	-		
	Erp ※6 Annual consumption	kWh	-	-	-	-	531	-		
	Erp ※6 Class		-	-	-	-	B	-		
	POWER FACTOR	%	-	-	-	94	94	93	-	-
	NOISE INDOOR (H/M/L)	dB-A		40/38/35						
		Power Level dB		57/55/52						
	NOISE OUTDOOR (H/L)	dB-A					48/-			
		Power Level dB					65/-			
HEATING	CAPACITY	kW	8.0	8.0	8.0				2.0	9.0
		BTU/h	27300	27300	27300				6800	30700
	CURRENT	A	0.42×2	0.43×2	0.44×2	3.35	3.20	3.10	-	-
	INPUT POWER	W	90×2	94×2	98×2	2.120k	2.122k	2.124k	-	-
		TOTAL W		-		2.300k	2.310k	2.320k	600	3.000k
	COP/COP CLASS	TOTAL(W/W)※5("A"~"G")	-	-	-	3.48	3.46 / B	3.45	3.33	3.00
	Erp ※6 Pdsign	kW	-	-	-	-	6.1	-		
	Erp ※6 Tbivalen	°C	-	-	-	-	-9	-		
	Erp ※6 SCOP	(W/W)	-	-	-	-	3.8	-		
	Erp ※6 Annual consumption	kWh	-	-	-	-	2245	-		
	Erp ※6 Class		-	-	-	-	A	-		
	POWER FACTOR	%	-	-	-	96	96	95	-	-
	NOISE INDOOR (H/M/L)	dB-A		40/38/35			-		/	/
		Power Level dB		57/55/52			-			
	NOISE OUTDOOR (H/L)	dB-A		-			50/-		/	/
		Power Level dB		-			67/-			
EXTRA LOW TEMP	Total CAPACITY(kW)/INPUT POWER(W)/COP					-				
MAX CURRENT(A)/MAX INPUT POWER(W)			0.60×2/130×2	0.62×2/140×2	0.63×2/150×2	7.0/4.150k	7.0/4.360k	7.0/4.530k	/	
STARTING CURRENT(A)/COMP OUTPUT(W)			-	-	-	3.35/2.0k	3.20/2.0k	3.10/2.0k	/	
NETWORK IMPEDANCE (ΩMAX.)				-			-			
FM OUTPUT (W)				60×2			90		/	
MOISTURE REMOVAL VOLUME		L/h(Pt/h)	4.2	(2.1×2)	(8.8)		-			
External static pressure		Pa		50 (MIN10 - MAX80)						
I/D AIR FLOW	COOL	m³/min (ft³/min)		[14/12/10 (494/424/353)]×2						
	HEAT	m³/min (ft³/min)		[14/12/10 (494/424/353)]×2						
O/D AIR FLOW	COOL	m³/min (ft³/min)					60	(2119)		
	HEAT	m³/min (ft³/min)					60	(2119)		
REFRIGERANT TYPE, AMOUNT g(oz)						R410A	2.35k	(82.9)	/	
PROD DIM	HEIGHT : H mm(inch)			250 (9-27/32)			996 (39-7/32)		/	
	WIDTH : W mm(inch)			780 (+100) (30-23/32) (+3-15/16)			940 (37-1/32)		/	
	DEPTH : D mm(inch)			650 (25-19/32)			340 (13-13/32)		/	
PACK DIM	HEIGHT : H mm			345			1136		/	
	WIDTH : W mm			1007			1055		/	
	DEPTH : D mm			777			485		/	
MASS	(NET) kg(lb)			29 (64)			71 (157)		/	
	(GROSS) kg(lb)			34 (75)			79 (174)		/	
LAYERS LIMIT (actually)				8 (9)			2 (3)			
Operation Condition		Cool O.D(DBT)		18°C ~ 32°C			-15°C ~ 46°C			
		Heat O.D(DBT)		16°C ~ 30°C			-20°C ~ 24°C			
PIPING	PIPE DIAMETER mm (inch)			(Liquid)ø6.35(1/4) (Gas)ø12.7(1/2)			(Liquid)ø9.52(3/8) (Gas)ø15.88(5/8)			
	CONNECT METHOD, STD LENGTH m (ft)			flared type, 5.0(16.4)			flared type, 5.0(16.4)			
	PIPE LENGTH RANGE m (ft)			5 ~ 50 (16.4 ~ 164.0)					~	~
	I/D&O/D HEIGHT DIFFERENCE m (ft)			15 (OD located lower) / 30 (OD located higher) (49.2/98.4)						
	ADD GAS AMOUNT g/m (oz/ft)			50 (0.538)						
	PIPE LENGTH FOR ADDITIONAL GAS m (ft)			30 (98.4)						

*1: In case it is necessary to indicate the air flow volume in (l/s), the value in (m³/min.) shall be multiplied by 16.7 and rounded down the decimal point.
*2: If the EUROVENT Certified models can be operated under the extra-low temperature condition, -7°C dry bulb and -8°C wet-bulb temperatures with rated voltage 230 V shall be used.
*3: Network Impedance shall be applicable for EUROPE and CHINA models.
*4: The annual consumption is calculated by multiplying the input power at 230 V (400 V) by an average of 500 hours per year in cooling mode.
*5: EER and COP classification is at 230 V (400 V) only in accordance with EU directive 2002/31/EC.
*6: SEER and SCOP classification is at 230V(400V) only in accordance with EN-14825. For heating, SCOP indicates the value of only Average heating season, Other fiche data indicates in an attached sheet.

Simultaneous (Triple) -Type

1-1. Unit Speci□cations

PE1

5. Ducted Type S-36PN1E5A×3 / U-100PE1E8A

INDOOR		MODEL	S-36PN1E5A×3							
OUTDOOR		MODEL				U-100PE1E8A				
Branch pipe		MODEL	CZ-P3HPC2							
PERFORMANCE TEST CONDITION			ISO13253 / EN14511 / EN14825 / EN12102							
POWER SUPPLY		ø, Hz	1ø 50Hz			3ø 50Hz				
		V	220	230	240	380	400	415	Min	Max
COOLING	CAPACITY	kW	10.0	10.0	10.0				3.3	12.5
		BTU/h	34100	34100	34100				11300	42700
	CURRENT	A	0.42×3	0.43×3	0.44×3	3.95	3.75	3.60	-	-
	INPUT POWER	W	90×3	94×3	98×3	2.465k	2.468k	2.471k	-	-
		TOTAL W		-		2.735k	2.750k	2.765k	870	3.800k
	ANNUAL CONSUMPTION	TOTAL kWh ※4		-		-	1375	-	-	-
	EER/EER CLASS	TOTAL(W/W)※5("A"~"G")	-	-	-	3.66	3.64 / A	3.62	3.79	3.29
	Erp ※6 Pdsign	kW	-	-	-	-	10.0	-		
	Erp ※6 SEER	(W/W)	-	-	-	-	5.0	-		
	Erp ※6 Annual consumption	kWh	-	-	-	-	700	-		
	Erp ※6 Class		-	-	-	-	B	-		
	POWER FACTOR	%	-	-	-	95	95	95	-	-
	NOISE INDOOR (H/M/L)	dB-A		40/38/35						
		Power Level dB		57/55/52						
	NOISE OUTDOOR (H/L)	dB-A					52/-			
		Power Level dB					69/-			
HEATING	CAPACITY	kW	11.2	11.2	11.2				4.1	14.0
		BTU/h	38200	38200	38200				14000	47800
	CURRENT	A	0.42×3	0.43×3	0.44×3	4.35	4.15	4.00	-	-
	INPUT POWER	W	90×3	94×3	98×3	2.745k	2.748k	2.751k	-	-
		TOTAL W		-		3.015k	3.030k	3.045k	980	4.500k
	COP/COP CLASS	TOTAL(W/W)※5("A"~"G")	-	-	-	3.71	3.70 / A	3.68	4.18	3.11
	Erp ※6 Pdsign	kW	-	-	-	-	9.9	-		
	Erp ※6 Tbivalen	°C	-	-	-	-	-9	-		
	Erp ※6 SCOP	(W/W)	-	-	-	-	3.8	-		
	Erp ※6 Annual consumption	kWh	-	-	-	-	3646	-		
	Erp ※6 Class		-	-	-	-	A	-		
	POWER FACTOR	%	-	-	-	96	96	96	-	-
	NOISE INDOOR (H/M/L)	dB-A		40/38/35			-		/	/
		Power Level dB		57/55/52			-			
	NOISE OUTDOOR (H/L)	dB-A		-			52/-		/	/
		Power Level dB		-			69/-			
EXTRA LOW TEMP	Total CAPACITY(kW)/INPUT POWER(W)/COP					-				
MAX CURRENT(A)/MAX INPUT POWER(W)			0.60×3/130×3	0.62×3/140×3	0.63×3/150×3	9.0/5.550k	9.0/5.850k	9.0/6.100k	/	
STARTING CURRENT(A)/COMP OUTPUT(W)			-	-	-	4.35/3.0k	4.15/3.0k	4.00/3.0k	/	
NETWORK IMPEDANCE (ΩMAX.)				-			-			
FM OUTPUT (W)				60×3			90×2		/	
MOISTURE REMOVAL VOLUME		L/h(Pt/h)	6.0	(2.0×3)	(12.6)		-			
External static pressure		Pa		50 (MIN10 - MAX80)						
I/D AIR FLOW	COOL	m^3/min (ft^3/min)		[14/12/10 (494/424/353)]×3						
	HEAT	m^3/min (ft^3/min)		[14/12/10 (494/424/353)]×3						
O/D AIR FLOW	COOL	m^3/min (ft^3/min)				110		(3885)		
	HEAT	m^3/min (ft^3/min)				95		(3355)		
REFRIGERANT TYPE, AMOUNT g(oz)						R410A	3.40k	(119.9)	/	
PROD IM	HEIGHT : H mm(inch)			250 (9-27/32)			1416 (55-3/4)		/	
	WIDTH : W mm(inch)			780 (+100) (30-23/32) (+3-15/16)			940 (37-1/32)		/	
	DEPTH : D mm(inch)			650 (25-19/32)			340 (13-13/32)		/	
PAC D IM	HEIGHT : H mm			345			1556		/	
	WIDTH : W mm			1007			1055		/	
	DEPTH : D mm			777			485		/	
MASS	(NET) kg(lb)			29 (64)			98 (216)		/	
	(GROSS) kg(lb)			34 (75)			108 (238)		/	
LAYERS LIMIT (actually)				8 (9)			1 (2)			
Operation Condition		Cool O.D(DBT)		18°C ~ 32°C			-15°C ~ 46°C			
		Heat O.D(DBT)		16°C ~ 30°C			-20°C ~ 24°C			
PIPING	PIPE DIAMETER mm (inch)			(Liquid)ø6.35(1/4) (Gas)ø12.7(1/2)			(Liquid)ø9.52(3/8) (Gas)ø15.88(5/8)			
	CONNECT METHOD, STD LENGTH m (ft)			flared type, 5.0(16.4)			flared type, 5.0(16.4)			
	PIPE LENGTH RANGE m (ft)			5 ~ 75 (16.4 ~ 246.1)					~	~
	I/D&O/D HEIGHT DIFFERENCE m (ft)			15 (OD located lower) / 30 (OD located higher) (49.2/98.4)						
	ADD GAS AMOUNT g/m (oz/ft)			50 (0.538)						
	PIPE LENGTH FOR ADDITIONAL GAS m (ft)			20 (65.6)						

*1: In case it is necessary to indicate the air □ow volume in (l/s), the value in (m^3/min.) shall be multiplied by 16.7 and rounded down the decimal point.
*2: If the EUROVENT Certi□ed models can be operated under the □extra-low□temperature condition, -7□C dry bulb and -8□C wet-bulb temperatures with rated voltage 230 V shall be used.
*3: Network Impedance shall be applicable for EUROPE and CHINA models.
*4: The annual consumption is calculated by multiplying the input power at 230 V (400 V) by an average of 500 hours per year in cooling mode.
*5: EER and COP classification is at 230 V (400 V) only in accordance with EU directive 2002/31/EC.
*6: SEER and SCOP classification is at 230V(400V) only in accordance with EN-14825. For heating, SCOP indicates the value of only Average heating season, Other fiche data indicates in an attached sheet.

Simultaneous (Double-Twin) -Type

1-1. Unit Speci□cations

PE1

5. Ducted Type S-36PN1E5A×4 / U-125PE1E8A

INDOOR		MODEL	S-36PN1E5A×4							
OUTDOOR		MODEL				U-125PE1E8A				
Branch pipe		MODEL	CZ-P155BK1×3							
PERFORMANCE TEST CONDITION			ISO13253 / EN14511 / EN12102							
POWER SUPPLY		ø, Hz	1ø 50Hz			3ø 50Hz				
		V	220	230	240	380	400	415	Min	Max
COOLING	CAPACITY	kW	12.5	12.5	12.5				3.3	14.0
		BTU/h	42700	42700	42700				11300	47800
	CURRENT	A	0.42×4	0.43×4	0.44×4	5.80	5.50	5.30	-	-
	INPUT POWER	W	90×4	94×4	98×4	3.665k	3.669k	3.673k	-	-
		TOTAL W		-		4.025k	4.045k	4.065k	1000	4.800k
	ANNUAL CONSUMPTION	TOTAL kWh ※4		-		-	2025	-	-	-
	EER/EER CLASS	TOTAL(W/W)※5/("A"~"G")	-	-	-	3.11	3.09 / B	3.08	3.30	2.92
	Erp ※6 Pdsign	kW	-	-	-	-	-	-		
	Erp ※6 SEER	(W/W)	-	-	-	-	-	-		
	Erp ※6 Annual consumption	kWh	-	-	-	-	-	-		
	Erp ※6 Class		-	-	-	-	-	-		
	POWER FACTOR	%	-	-	-	96	96	96	-	-
	NOISE INDOOR (H/M/L)	dB-A		40/38/35						
		Power Level dB		57/55/52						
	NOISE OUTDOOR (H/L)	dB-A					53/-			
		Power Level dB					70/-			
HEATING	CAPACITY	kW	14.0	14.0	14.0				4.1	16.0
		BTU/h	47800	47800	47800				14000	54600
	CURRENT	A	0.42×4	0.43×4	0.44×4	5.80	5.50	5.30	-	-
	INPUT POWER	W	90×4	94×4	98×4	3.655k	3.659k	3.663k	-	-
		TOTAL W		-		4.015k	4.035k	4.055k	1050	5.400k
	COP/COP CLASS	TOTAL(W/W)※5/("A"~"G")	-	-	-	3.49	3.47 / B	3.45	3.90	2.96
	Erp ※6 Pdsign	kW	-	-	-	-	-	-		
	Erp ※6 Tbivalen	°C	-	-	-	-	-	-		
	Erp ※6 SCOP	(W/W)	-	-	-	-	-	-		
	Erp ※6 Annual consumption	kWh	-	-	-	-	-	-		
	Erp ※6 Class		-	-	-	-	-	-		
	POWER FACTOR	%	-	-	-	96	96	96	-	-
	NOISE INDOOR (H/M/L)	dB-A		40/38/35			-		/	/
		Power Level dB		57/55/52			-			
	NOISE OUTDOOR (H/L)	dB-A		-			53/-		/	/
		Power Level dB		-			70/-			
EXTRA LOW TEMP	Total CAPACITY(kW)/INPUT POWER(W)/COP					-				
MAX CURRENT(A)/MAX INPUT POWER(W)			0.60×4/130×4	0.62×4/140×4	0.63×4/150×4	10.0/6.200k	10.0/6.500k	10.0/6.750k	/	
STARTING CURRENT(A)/COMP OUTPUT(W)			-	-	-	5.80/3.0k	5.50/3.0k	5.30/3.0k	/	
NETWORK IMPEDANCE (ΩMAX.)				-			-			
FM OUTPUT (W)				60×4			90×2		/	
MOISTURE REMOVAL VOLUME		L/h(Pt/h)	7.9	(1.98×4)	(16.6)		-			
External static pressure		Pa		50 (MIN10 - MAX80)						
I/D AIR FLOW	COOL	m^3/min (ft^3/min)		[14/12/10 (494/424/353)]×4						
	HEAT	m^3/min (ft^3/min)		[14/12/10 (494/424/353)]×4						
O/D AIR FLOW	COOL	m^3/min (ft^3/min)				130		(4591)		
	HEAT	m^3/min (ft^3/min)				110		(3885)		
REFRIGERANT TYPE, AMOUNT g(oz)						R410A	3.40k	(119.9)	/	
PROD	HEIGHT : H mm(inch)			250 (9-27/32)			1416 (55-3/4)		/	
	WIDTH : W mm(inch)			780 (+100) (30-23/32) (+3-15/16)			940 (37-1/32)		/	
	DEPTH : D mm(inch)			650 (25-19/32)			340 (13-13/32)		/	
PACK	HEIGHT : H mm			345			1556		/	
	WIDTH : W mm			1007			1055		/	
	DEPTH : D mm			777			485		/	
MASS	(NET) kg(lb)			29 (64)			98 (216)		/	
	(GROSS) kg(lb)			34 (75)			108 (238)		/	
LAYERS LIMIT (actually)				8 (9)			1 (2)			
Operation Condition		Cool O.D(DBT)		18°C ~ 32°C			-15°C ~ 46°C			
		Heat O.D(DBT)		16°C ~ 30°C			-20°C ~ 24°C			
PIPING	PIPE DIAMETER mm (inch)			(Liquid)ø6.35(1/4) (Gas)ø12.7(1/2)			(Liquid)ø9.52(3/8) (Gas)ø15.88(5/8)			
	CONNECT METHOD, STD LENGTH m (ft)			flared type, 5.0(16.4)			flared type, 5.0(16.4)			
	PIPE LENGTH RANGE m (ft)			5 ~ 75 (16.4 ~ 246.1)					~	~
	I/D&O/D HEIGHT DIFFERENCE m (ft)			15 (OD located lower) / 30 (OD located higher) (49.2/98.4)						
	ADD GAS AMOUNT g/m (oz/ft)			50 (0.538)						
	PIPE LENGTH FOR ADDITIONAL GAS m (ft)			20 (65.6)						

*1: In case it is necessary to indicate the air □ow volume in (l/s), the value in (m^3/min.) shall be multiplied by 16.7 and rounded down the decimal point.
*2: If the EUROVENT Certi□ed models can be operated under the □extra-low□temperature condition, -7□C dry bulb and -8□C wet-bulb temperatures with rated voltage 230 V shall be used.
*3: Network Impedance shall be applicable for EUROPE and CHINA models.
*4: The annual consumption is calculated by multiplying the input power at 230 V (400 V) by an average of 500 hours per year in cooling mode.
*5: EER and COP classification is at 230 V (400 V) only in accordance with EU directive 2002/31/EC.
*6: SEER and SCOP classification is at 230V(400V) only in accordance with EN-14825. For heating, SCOP indicates the value of only Average heating season, Other fiche data indicates in an attached sheet.

Simultaneous (Triple) -Type

1-1. Unit Speci□cations

PE1

5. Ducted Type S-45PN1E5A×3 / U-125PE1E8A

INDOOR		MODEL	S-45PN1E5A×3							
OUTDOOR		MODEL				U-125PE1E8A				
Branch pipe		MODEL	CZ-P3HPC2							
PERFORMANCE TEST CONDITION			ISO13253 / EN14511 / EN12102							
POWER SUPPLY		ø, Hz	1ø 50Hz			3ø 50Hz				
		V	220	230	240	380	400	415	Min	Max
COOLING	CAPACITY	kW	12.5	12.5	12.5				3.3	14.0
		BTU/h	42700	42700	42700				11300	47800
	CURRENT	A	0.54×3	0.55×3	0.56×3	5.80	5.50	5.30	-	-
	INPUT POWER	W	115×3	120×3	125×3	3.665k	3.665k	3.665k	-	-
		TOTAL W		-		4.010k	4.025k	4.040k	1000	4.800k
	ANNUAL CONSUMPTION	TOTAL kWh ※4		-		-	2015	-	-	-
	EER/EER CLASS	TOTAL(W/W)※5/("A"~"G")	-	-	-	3.12	3.11 / B	3.09	3.30	2.92
	Erp ※6 Pdsign	kW	-	-	-	-	-	-		
	Erp ※6 SEER	(W/W)	-	-	-	-	-	-		
	Erp ※6 Annual consumption	kWh	-	-	-	-	-	-		
	Erp ※6 Class		-	-	-	-	-	-		
	POWER FACTOR	%	-	-	-	96	96	96	-	-
	NOISE INDOOR (H/M/L)	dB-A		41/39/35						
		Power Level dB		58/56/52						
	NOISE OUTDOOR (H/L)	dB-A					53/-			
		Power Level dB					70/-			
HEATING	CAPACITY	kW	14.0	14.0	14.0				4.1	16.0
		BTU/h	47800	47800	47800				14000	54600
	CURRENT	A	0.54×3	0.55×3	0.56×3	5.80	5.50	5.30	-	-
	INPUT POWER	W	115×3	120×3	125×3	3.655k	3.655k	3.655k	-	-
		TOTAL W		-		4.000k	4.015k	4.030k	1050	5.400k
	COP/COP CLASS	TOTAL(W/W)※5/("A"~"G")	-	-	-	3.50	3.49 / B	3.47	3.90	2.96
	Erp ※6 Pdsign	kW	-	-	-	-	-	-		
	Erp ※6 Tbivalen	°C	-	-	-	-	-	-		
	Erp ※6 SCOP	(W/W)	-	-	-	-	-	-		
	Erp ※6 Annual consumption	kWh	-	-	-	-	-	-		
	Erp ※6 Class		-	-	-	-	-	-		
	POWER FACTOR	%	-	-	-	96	96	96	-	-
	NOISE INDOOR (H/M/L)	dB-A		41/39/35			-		/	/
		Power Level dB		58/56/52			-			
	NOISE OUTDOOR (H/L)	dB-A		-			53/-		/	/
		Power Level dB		-			70/-			
EXTRA LOW TEMP	Total CAPACITY(kW)/INPUT POWER(W)/COP		-							
MAX CURRENT(A)/MAX INPUT POWER(W)			0.74×3/165×3	0.76×3/180×3	0.78×3/190×3	10.0/6.200k	10.0/6.500k	10.0/6.750k	/	
STARTING CURRENT(A)/COMP OUTPUT(W)			-	-	-	5.80/3.0k	5.50/3.0k	5.30/3.0k	/	
NETWORK IMPEDANCE (ΩMAX.)				-			-			
FM OUTPUT (W)				85×3			90×2		/	
MOISTURE REMOVAL VOLUME		L/h(Pt/h)	7.9	(2.63×3)	(16.6)		-			
External static pressure		Pa	50 (MIN10 - MAX80)							
I/D AIR FLOW	COOL	m^3/min (ft^3/min)	[16/13/11 (565/459/388)]×3							
	HEAT	m^3/min (ft^3/min)	[16/13/11 (565/459/388)]×3							
O/D AIR FLOW	COOL	m^3/min (ft^3/min)				130		(4591)		
	HEAT	m^3/min (ft^3/min)				110		(3885)		
REFRIGERANT TYPE, AMOUNT g(oz)						R410A	3.40k	(119.9)	/	
PROD DIM	HEIGHT : H mm(inch)		250 (9-27/32)			1416 (55-3/4)			/	
	WIDTH : W mm(inch)		780 (+100) (30-23/32) (+3-15/16)			940 (37-1/32)			/	
	DEPTH : D mm(inch)		650 (25-19/32)			340 (13-13/32)			/	
PACK DIM	HEIGHT : H mm		345			1556			/	
	WIDTH : W mm		1007			1055			/	
	DEPTH : D mm		777			485			/	
MASS	(NET) kg(lb)		29 (64)			98 (216)			/	
	(GROSS) kg(lb)		34 (75)			108 (238)			/	
LAYERS LIMIT (actually)			8 (9)			1 (2)				
Operation Condition		Cool O.D(DBT)	18°C ~ 32°C			-15°C ~ 46°C				
		Heat O.D(DBT)	16°C ~ 30°C			-20°C ~ 24°C				
PIPING	PIPE DIAMETER mm (inch)		(Liquid)ø6.35(1/4) (Gas)ø12.7(1/2)			(Liquid)ø9.52(3/8) (Gas)ø15.88(5/8)				
	CONNECT METHOD, STD LENGTH m (ft)		flared type, 5.0(16.4)			flared type, 5.0(16.4)				
	PIPE LENGTH RANGE m (ft)		5 ~ 75 (16.4 ~ 246.1)						~	~
	I/D&O/D HEIGHT DIFFERENCE m (ft)		15 (OD located lower) / 30 (OD located higher) (49.2/98.4)							
	ADD GAS AMOUNT g/m (oz/ft)		50 (0.538)							
	PIPE LENGTH FOR ADDITIONAL GAS m (ft)		20 (65.6)							

*1: In case it is necessary to indicate the air □ow volume in (l/s), the value in (m^3/min.) shall be multiplied by 16.7 and rounded down the decimal point.
*2: If the EUROVENT Certi□ed models can be operated under the □extra-low□temperature condition, -7□C dry bulb and -8□C wet-bulb temperatures with rated voltage 230 V shall be used.
*3: Network Impedance shall be applicable for EUROPE and CHINA models.
*4: The annual consumption is calculated by multiplying the input power at 230 V (400 V) by an average of 500 hours per year in cooling mode.
*5: EER and COP classification is at 230 V (400 V) only in accordance with EU directive 2002/31/EC.
*6: SEER and SCOP classification is at 230V(400V) only in accordance with EN-14825. For heating, SCOP indicates the value of only Average heating season, Other fiche data indicates in an attached sheet.

Simultaneous (Twin) -Type

1-1. Unit Speci□cations

PE1

5. Ducted Type S-50PN1E5A×2 / U-100PE1E8A

INDOOR		MODEL	S-50PN1E5A×2							
OUTDOOR		MODEL				U-100PE1E8A				
Branch pipe		MODEL	CZ-P155BK1							
PERFORMANCE TEST CONDITION			ISO13253 / EN14511 / EN14825 / EN12102							
POWER SUPPLY		ø, Hz	1ø 50Hz			3ø 50Hz				
		V	220	230	240	380	400	415	Min	Max
COOLING	CAPACITY	kW	10.0	10.0	10.0				3.3	12.5
		BTU/h	34100	34100	34100				11300	42700
	CURRENT	A	0.54×2	0.55×2	0.56×2	3.95	3.75	3.60	-	-
	INPUT POWER	W	115×2	120×2	125×2	2.465k	2.465k	2.465k	-	-
		TOTAL W		-		2.695k	2.705k	2.715k	870	3.800k
	ANNUAL CONSUMPTION	TOTAL kWh ※4		-		-	1355	-	-	-
	EER/EER CLASS	TOTAL(W/W)※5("A"~"G")	-	-	-	3.71	3.70 / A	3.68	3.79	3.29
	Erp ※6 Pdsign	kW	-	-	-	-	10.0	-		
	Erp ※6 SEER	(W/W)	-	-	-	-	5.3	-		
	Erp ※6 Annual consumption	kWh	-	-	-	-	659	-		
	Erp ※6 Class		-	-	-	-	A	-		
	POWER FACTOR	%	-	-	-	95	95	95	-	-
	NOISE INDOOR (H/M/L)	dB-A		41/39/35						
		Power Level dB		58/56/52						
	NOISE OUTDOOR (H/L)	dB-A					52/-			
		Power Level dB					69/-			
HEATING	CAPACITY	kW	11.2	11.2	11.2				4.1	14.0
		BTU/h	38200	38200	38200				14000	47800
	CURRENT	A	0.54×2	0.55×2	0.56×2	4.35	4.15	4.00	-	-
	INPUT POWER	W	115×2	120×2	125×2	2.745k	2.745k	2.745k	-	-
		TOTAL W		-		2.975k	2.985k	2.995k	980	4.500k
	COP/COP CLASS	TOTAL(W/W)※5("A"~"G")	-	-	-	3.76	3.75 / A	3.74	4.18	3.11
	Erp ※6 Pdsign	kW	-	-	-	-	9.9	-		
	Erp ※6 Tbivalen	°C	-	-	-	-	-9	-		
	Erp ※6 SCOP	(W/W)	-	-	-	-	3.8	-		
	Erp ※6 Annual consumption	kWh	-	-	-	-	3646	-		
	Erp ※6 Class		-	-	-	-	A	-		
	POWER FACTOR	%	-	-	-	96	95	95	-	-
	NOISE INDOOR (H/M/L)	dB-A		41/39/35			-		/	/
		Power Level dB		58/56/52			-			
	NOISE OUTDOOR (H/L)	dB-A		-			52/-		/	/
		Power Level dB		-			69/-			
EXTRA LOW TEMP	Total CAPACITY(kW)/INPUT POWER(W)/COP				-					
MAX CURRENT(A)/MAX INPUT POWER(W)			0.74×2/165×2	0.76×2/180×2	0.78×2/190×2	9.0/5.550k	9.0/5.850k	9.0/6.100k	/	
STARTING CURRENT(A)/COMP OUTPUT(W)			-	-	-	4.35/3.0k	4.15/3.0k	4.00/3.0k	/	
NETWORK IMPEDANCE (ΩMAX.)				-			-			
FM OUTPUT (W)				85×2			90×2		/	
MOISTURE REMOVAL VOLUME		L/h(Pt/h)	6.0	(3.0×2)	(12.6)		-			
External static pressure		Pa		50 (MIN10 - MAX80)						
I/D AIR FLOW	COOL	m^3/min (ft^3/min)		[16/13/11 (565/459/388)]×2						
	HEAT	m^3/min (ft^3/min)		[16/13/11 (565/459/388)]×2						
O/D AIR FLOW	COOL	m^3/min (ft^3/min)				110		(3885)		
	HEAT	m^3/min (ft^3/min)				95		(3355)		
REFRIGERANT TYPE, AMOUNT g(oz)						R410A	3.40k	(119.9)	/	
PROD IM	HEIGHT : H mm(inch)			250 (9-27/32)			1416 (55-3/4)		/	
	WIDTH : W mm(inch)			780 (+100) (30-23/32) (+3-15/16)			940 (37-1/32)		/	
	DEPTH : D mm(inch)			650 (25-19/32)			340 (13-13/32)		/	
PAC D IM	HEIGHT : H mm			345			1556		/	
	WIDTH : W mm			1007			1055		/	
	DEPTH : D mm			777			485		/	
MASS	(NET) kg(lb)			29 (64)			98 (216)		/	
	(GROSS) kg(lb)			34 (75)			108 (238)		/	
LAYERS LIMIT (actually)				8 (9)			1 (2)			
Operation Condition		Cool O.D(DBT)		18°C ~ 32°C			-15°C ~ 46°C			
		Heat O.D(DBT)		16°C ~ 30°C			-20°C ~ 24°C			
PIPING	PIPE DIAMETER mm (inch)			(Liquid)ø6.35(1/4) (Gas)ø12.7(1/2)			(Liquid)ø9.52(3/8) (Gas)ø15.88(5/8)			
	CONNECT METHOD, STD LENGTH m (ft)			flared type, 5.0(16.4)			flared type, 5.0(16.4)			
	PIPE LENGTH RANGE m (ft)			5 ~ 75 (16.4 ~ 246.1)					~	~
	I/D&O/D HEIGHT DIFFERENCE m (ft)			15 (OD located lower) / 30 (OD located higher) (49.2/98.4)						
	ADD GAS AMOUNT g/m (oz/ft)			50 (0.538)						
	PIPE LENGTH FOR ADDITIONAL GAS m (ft)			30 (98.4)						

*1: In case it is necessary to indicate the air □ow volume in (l/s), the value in (m^3/min.) shall be multiplied by 16.7 and rounded down the decimal point.
*2: If the EUROVENT Certi□ed models can be operated under the □extra-low□temperature condition, -7□C dry bulb and -8□C wet-bulb temperatures with rated voltage 230 V shall be used.
*3: Network Impedance shall be applicable for EUROPE and CHINA models.
*4: The annual consumption is calculated by multiplying the input power at 230 V (400 V) by an average of 500 hours per year in cooling mode.
*5: EER and COP classification is at 230 V (400 V) only in accordance with EU directive 2002/31/EC.
*6: SEER and SCOP classification is at 230V(400V) only in accordance with EN-14825. For heating, SCOP indicates the value of only Average heating season, Other fiche data indicates in an attached sheet.

Simultaneous (Triple) -Type

1-1. Unit Specifications

PE1

5. Ducted Type S-50PN1E5A×3 / U-140PE1E8A

INDOOR		MODEL	S-50PN1E5A×3							
OUTDOOR		MODEL				U-140PE1E8A				
Branch pipe		MODEL	CZ-P3HPC2							
PERFORMANCE TEST CONDITION			ISO13253 / EN14511 / EN12102							
POWER SUPPLY		ø, Hz	1ø 50Hz			3ø 50Hz				
		V	220	230	240	380	400	415	Min	Max
COOLING	CAPACITY	kW	14.0	14.0	14.0				3.3	15.5
		BTU/h	47800	47800	47800				11300	52900
	CURRENT	A	0.54×3	0.55×3	0.56×3	6.95	6.60	6.35	-	-
	INPUT POWER	W	115×3	120×3	125×3	4.400k	4.400k	4.400k	-	-
		TOTAL W		-		4.745k	4.760k	4.775k	1000	6.200k
	ANNUAL CONSUMPTION	TOTAL kWh ※4		-		-	2380	-	-	-
	EER/EER CLASS	TOTAL(W/W)※5/("A"~"G")	-	-	-	2.95	2.94 / C	2.93	3.30	2.50
	Erp ※6 Pdsign	kW	-	-	-	-	-	-		
	Erp ※6 SEER	(W/W)	-	-	-	-	-	-		
	Erp ※6 Annual consumption	kWh	-	-	-	-	-	-		
	Erp ※6 Class		-	-	-	-	-	-		
	POWER FACTOR	%	-	-	-	96	96	96	-	-
	NOISE INDOOR (H/M/L)	dB-A		41/39/35						
		Power Level dB		58/56/52						
	NOISE OUTDOOR (H/L)	dB-A					54/-			
		Power Level dB					71/-			
HEATING	CAPACITY	kW	16.0	16.0	16.0				4.1	18.0
		BTU/h	54600	54600	54600				14000	61400
	CURRENT	A	0.54×3	0.55×3	0.56×3	7.00	6.65	6.45	-	-
	INPUT POWER	W	115×3	120×3	125×3	4.440k	4.440k	4.440k	-	-
		TOTAL W		-		4.785k	4.800k	4.815k	1050	6.100k
	COP/COP CLASS	TOTAL(W/W)※5/("A"~"G")	-	-	-	3.34	3.33 / C	3.32	3.90	2.95
	Erp ※6 Pdsign	kW	-	-	-	-	-	-		
	Erp ※6 Tbivalen	°C	-	-	-	-	-	-		
	Erp ※6 SCOP	(W/W)	-	-	-	-	-	-		
	Erp ※6 Annual consumption	kWh	-	-	-	-	-	-		
	Erp ※6 Class		-	-	-	-	-	-		
	POWER FACTOR	%	-	-	-	96	96	96	-	-
	NOISE INDOOR (H/M/L)	dB-A		41/39/35			-		/	/
		Power Level dB		58/56/52			-			
	NOISE OUTDOOR (H/L)	dB-A		-			55/-		/	/
		Power Level dB		-			71/-			
EXTRA LOW TEMP	Total CAPACITY(kW)/INPUT POWER(W)/COP					-				
MAX CURRENT(A)/MAX INPUT POWER(W)			0.74×3/165×3	0.76×3/180×3	0.78×3/190×3	11.0/6.800k	11.0/7.150k	11.0/7.450k	/	
STARTING CURRENT(A)/COMP OUTPUT(W)			-	-	-	7.00/3.0k	6.65/3.0k	6.45/3.0k	/	
NETWORK IMPEDANCE (ΩMAX.)				-			-			
FM OUTPUT (W)				85×3			90×2		/	
MOISTURE REMOVAL VOLUME		L/h(Pt/h)	9.0	(3.0×3)	(18.9)		-			
External static pressure		Pa		50 (MIN10 - MAX80)						
I/D AIR FLOW	COOL	m^3/min (ft^3/min)		[16/13/11 (565/459/388)]×3						
	HEAT	m^3/min (ft^3/min)		[16/13/11 (565/459/388)]×3						
O/D AIR FLOW	COOL	m^3/min (ft^3/min)				135		(4767)		
	HEAT	m^3/min (ft^3/min)				120		(4238)		
REFRIGERANT TYPE, AMOUNT g(oz)						R410A	3.40k	(119.9)	/	
PROD DIM	HEIGHT : H mm(inch)			250 (9-27/32)			1416 (55-3/4)		/	
	WIDTH : W mm(inch)			780 (+100) (30-23/32) (+3-15/16)			940 (37-1/32)		/	
	DEPTH : D mm(inch)			650 (25-19/32)			340 (13-13/32)		/	
PACK DIM	HEIGHT : H mm			345			1556		/	
	WIDTH : W mm			1007			1055		/	
	DEPTH : D mm			777			485		/	
MASS	(NET) kg(lb)			29 (64)			98 (216)		/	
	(GROSS) kg(lb)			34 (75)			108 (238)		/	
LAYERS LIMIT (actually)				8 (9)			1 (2)			
Operation Condition		Cool O.D(DBT)		18°C ~ 32°C			-15°C ~ 46°C			
		Heat O.D(DBT)		16°C ~ 30°C			-20°C ~ 24°C			
PIPING	PIPE DIAMETER mm (inch)			(Liquid)ø6.35(1/4) (Gas)ø12.7(1/2)			(Liquid)ø9.52(3/8) (Gas)ø15.88(5/8)			
	CONNECT METHOD, STD LENGTH m (ft)			flared type, 5.0(16.4)			flared type, 5.0(16.4)			
	PIPE LENGTH RANGE m (ft)			5 ~ 75			(16.4 ~ 246.1)		~	~
	I/D&O/D HEIGHT DIFFERENCE m (ft)			15 (OD located lower) / 30 (OD located higher)			(49.2/98.4)			
	ADD GAS AMOUNT g/m (oz/ft)			50			(0.538)			
	PIPE LENGTH FOR ADDITIONAL GAS m (ft)			20			(65.6)			

*1: In case it is necessary to indicate the air flow volume in (l/s), the value in (m^3/min.) shall be multiplied by 16.7 and rounded down the decimal point.
*2: If the EUROVENT Certified models can be operated under the extra-low temperature condition, -7°C dry bulb and -8°C wet-bulb temperatures with rated voltage 230 V shall be used.
*3: Network Impedance shall be applicable for EUROPE and CHINA models.
*4: The annual consumption is calculated by multiplying the input power at 230 V (400 V) by an average of 500 hours per year in cooling mode.
*5: EER and COP classification is at 230 V (400 V) only in accordance with EU directive 2002/31/EC.
*6: SEER and SCOP classification is at 230V(400V) only in accordance with EN-14825. For heating, SCOP indicates the value of only Average heating season, Other fiche data indicates in an attached sheet.

Simultaneous (Twin) -Type

1-1. Unit Speci□cations

PE1

5. Ducted Type S-60PN1E5A×2 / U-125PE1E8A

INDOOR		MODEL	S-60PN1E5A×2							
OUTDOOR		MODEL				U-125PE1E8A				
Branch pipe		MODEL	CZ-P155BK1							
PERFORMANCE TEST CONDITION			ISO13253 / EN14511 / EN12102							
POWER SUPPLY		ø, Hz	1ø 50Hz			3ø 50Hz				
		V	220	230	240	380	400	415	Min	Max
COOLING	CAPACITY	kW	12.5	12.5	12.5				3.3	14.0
		BTU/h	42700	42700	42700				11300	47800
	CURRENT	A	1.12×2	1.08×2	1.04×2	5.80	5.50	5.30	-	-
	INPUT POWER	W	140×2	140×2	140×2	3.665k	3.665k	3.665k	-	-
		TOTAL W		-		3.945k	3.945k	3.945k	1000	4.800k
	ANNUAL CONSUMPTION	TOTAL kWh ※4		-		-	1975	-	-	-
	EER/EER CLASS	TOTAL(W/W)※5("A"~"G")	-	-	-	3.17	3.17 / B	3.17	3.30	2.92
	Erp ※6 Pdsign	kW	-	-	-	-	-	-		
	Erp ※6 SEER	(W/W)	-	-	-	-	-	-		
	Erp ※6 Annual consumption	kWh	-	-	-	-	-	-		
	Erp ※6 Class		-	-	-	-	-	-		
	POWER FACTOR	%	-	-	-	96	96	96	-	-
	NOISE INDOOR (H/M/L)	dB-A		43/41/36						
		Power Level dB		60/58/53						
	NOISE OUTDOOR (H/L)	dB-A					53/-			
		Power Level dB					70/-			
HEATING	CAPACITY	kW	14.0	14.0	14.0				4.1	16.0
		BTU/h	47800	47800	47800				14000	54600
	CURRENT	A	1.12×2	1.08×2	1.04×2	5.80	5.50	5.30	-	-
	INPUT POWER	W	140×2	140×2	140×2	3.655k	3.655k	3.655k	-	-
		TOTAL W		-		3.935k	3.935k	3.935k	1050	5.400k
	COP/COP CLASS	TOTAL(W/W)※5("A"~"G")	-	-	-	3.56	3.56 / B	3.56	3.90	2.96
	Erp ※6 Pdsign	kW	-	-	-	-	-	-		
	Erp ※6 Tbivalen	°C	-	-	-	-	-	-		
	Erp ※6 SCOP	(W/W)	-	-	-	-	-	-		
	Erp ※6 Annual consumption	kWh	-	-	-	-	-	-		
	Erp ※6 Class		-	-	-	-	-	-		
	POWER FACTOR	%	-	-	-	96	96	96	-	-
	NOISE INDOOR (H/M/L)	dB-A		43/41/36			-		/	/
		Power Level dB		60/58/53			-			
	NOISE OUTDOOR (H/L)	dB-A		-			53/-		/	/
		Power Level dB		-			70/-			
EXTRA LOW TEMP	Total CAPACITY(kW)/INPUT POWER(W)/COP		-							
MAX CURRENT(A)/MAX INPUT POWER(W)			1.28×2/160×2	1.24×2/160×2	1.20×2/160×2	10.0/6.200k	10.0/6.500k	10.0/6.750k	/	
STARTING CURRENT(A)/COMP OUTPUT(W)			-	-	-	5.80/3.0k	5.50/3.0k	5.30/3.0k	/	
NETWORK IMPEDANCE (ΩMAX.)				-			-			
FM OUTPUT (W)				120×2			90×2		/	
MOISTURE REMOVAL VOLUME		L/h(Pt/h)	7.9	(3.95×2)	(16.6)		-			
External static pressure		Pa	50 (MIN10 - MAX80)							
I/D AIR FLOW	COOL	m^3/min (ft^3/min)	[22/20/16 (777/706/565)]×2							
	HEAT	m^3/min (ft^3/min)	[22/20/16 (777/706/565)]×2							
O/D AIR FLOW	COOL	m^3/min (ft^3/min)				130		(4591)		
	HEAT	m^3/min (ft^3/min)				110		(3885)		
REFRIGERANT TYPE, AMOUNT g(oz)						R410A	3.40k	(119.9)	/	
PROD IM	HEIGHT : H mm(inch)		250 (9-27/32)			1416 (55-3/4)			/	
	WIDTH : W mm(inch)		1000 (+100) (39-5/16) (+3-15/16)			940 (37-1/32)			/	
	DEPTH : D mm(inch)		650 (25-19/32)			340 (13-13/32)			/	
PACK DIM	HEIGHT : H mm		338			1556			/	
	WIDTH : W mm		1211			1055			/	
	DEPTH : D mm		761			485			/	
MASS	(NET) kg(lb)		32 (71)			98 (216)			/	
	(GROSS) kg(lb)		38 (84)			108 (238)			/	
LAYERS LIMIT (actually)			6 (7)			1 (2)				
Operation Condition		Cool O.D(DBT)	18°C ~ 32°C			-15°C ~ 46°C				
		Heat O.D(DBT)	16°C ~ 30°C			-20°C ~ 24°C				
PIPING	PIPE DIAMETER mm (inch)		(Liquid)ø9.52(3/8) (Gas)ø15.88(5/8)			(Liquid)ø9.52(3/8) (Gas)ø15.88(5/8)				
	CONNECT METHOD, STD LENGTH m (ft)		flared type, 5.0(16.4)			flared type, 5.0(16.4)				
	PIPE LENGTH RANGE m (ft)		5 ~ 75 (16.4 ~ 246.1)						~	~
	I/D&O/D HEIGHT DIFFERENCE m (ft)		15 (OD located lower) / 30 (OD located higher) (49.2/98.4)							
	ADD GAS AMOUNT g/m (oz/ft)		50 (0.538)							
	PIPE LENGTH FOR ADDITIONAL GAS m (ft)		30 (98.4)							

*1: In case it is necessary to indicate the air □ow volume in (l/s), the value in (m^3/min.) shall be multiplied by 16.7 and rounded down the decimal point.
*2: If the EUROVENT Certi□ed models can be operated under the □extra-low□temperature condition, -7□C dry bulb and -8□C wet-bulb temperatures with rated voltage 230 V shall be used.
*3: Network Impedance shall be applicable for EUROPE and CHINA models.
*4: The annual consumption is calculated by multiplying the input power at 230 V (400 V) by an average of 500 hours per year in cooling mode.
*5: EER and COP classification is at 230 V (400 V) only in accordance with EU directive 2002/31/EC.
*6: SEER and SCOP classification is at 230V(400V) only in accordance with EN-14825. For heating, SCOP indicates the value of only Average heating season, Other fiche data indicates in an attached sheet.

Single -Type

1-1. Unit Speci□cations

PE1

5. Ducted Type S-71PN1E5A / U-71PE1E8A

INDOOR		MODEL	S-71PN1E5A							
OUTDOOR		MODEL				U-71PE1E8A				
Branch pipe		MODEL				-				
PERFORMANCE TEST CONDITION			ISO13253 / EN14511 / EN14825 / EN12102							
POWER SUPPLY		ø, Hz	1ø 50Hz			3ø 50Hz				
		V	220	230	240	380	400	415	Min	Max
COOLING	CAPACITY	kW	7.1	7.1	7.1				2.5	8.0
		BTU/h	24200	24200	24200				8500	27300
	CURRENT	A	1.12	1.08	1.04	3.25	3.10	3.00	-	-
	INPUT POWER	W	140	140	140	2.010k	2.010k	2.010k	-	-
		TOTAL W		-		2.150k	2.150k	2.150k	660	2.750k
	ANNUAL CONSUMPTION	TOTAL kWh ※4		-		-	1075	-	-	-
	EER/EER CLASS	TOTAL(W/W)※5("A"~"G")	-	-	-	3.30	3.30 / A	3.30	3.79	2.91
	Erp ※6 Pdsign	kW	-	-	-	-	7.1	-		
	Erp ※6 SEER	(W/W)	-	-	-	-	5.1	-		
	Erp ※6 Annual consumption	kWh	-	-	-	-	487	-		
	Erp ※6 Class		-	-	-	-	A	-		
	POWER FACTOR	%	-	-	-	94	94	93	-	-
	NOISE INDOOR (H/M/L)	dB-A		43/41/36						
		Power Level dB		60/58/53						
	NOISE OUTDOOR (H/L)	dB-A					48/-			
		Power Level dB					65/-			
HEATING	CAPACITY	kW	8.0	8.0	8.0				2.0	9.0
		BTU/h	27300	27300	27300				6800	30700
	CURRENT	A	1.12	1.08	1.04	3.35	3.20	3.10	-	-
	INPUT POWER	W	140	140	140	2.120k	2.120k	2.120k	-	-
		TOTAL W		-		2.260k	2.260k	2.260k	600	3.000k
	COP/COP CLASS	TOTAL(W/W)※5("A"~"G")	-	-	-	3.54	3.54 / B	3.54	3.33	3.00
	Erp ※6 Pdsign	kW	-	-	-	-	6.2	-		
	Erp ※6 Tbivalen	°C	-	-	-	-	-9	-		
	Erp ※6 SCOP	(W/W)	-	-	-	-	3.8	-		
	Erp ※6 Annual consumption	kWh	-	-	-	-	2284	-		
	Erp ※6 Class		-	-	-	-	A	-		
	POWER FACTOR	%	-	-	-	96	96	95	-	-
	NOISE INDOOR (H/M/L)	dB-A		43/41/36			-		/	/
		Power Level dB		60/58/53			-			
	NOISE OUTDOOR (H/L)	dB-A		-			50/-		/	/
		Power Level dB		-			67/-			
EXTRA LOW TEMP	Total CAPACITY(kW)/INPUT POWER(W)/COP					-				
MAX CURRENT(A)/MAX INPUT POWER(W)			1.28/160	1.24/160	1.20/160	7.0/4.150k	7.0/4.360k	7.0/4.530k	/	
STARTING CURRENT(A)/COMP OUTPUT(W)			-	-	-	3.35/2.0k	3.20/2.0k	3.10/2.0k	/	
NETWORK IMPEDANCE (ΩMAX.)				-			-			
FM OUTPUT (W)				120			90		/	
MOISTURE REMOVAL VOLUME		L/h(Pt/h)	4.2		(8.8)		-			
External static pressure		Pa		50 (MIN10 - MAX80)						
I/D AIR FLOW	COOL	m^3/min (ft^3/min)		22/20/16 (777/706/565)						
	HEAT	m^3/min (ft^3/min)		22/20/16 (777/706/565)						
O/D AIR FLOW	COOL	m^3/min (ft^3/min)				60		(2119)		
	HEAT	m^3/min (ft^3/min)				60		(2119)		
REFRIGERANT TYPE, AMOUNT g(oz)						R410A	2.35k	(82.9)	/	
PROD IM	HEIGHT : H mm(inch)			250 (9-27/32)			996 (39-7/32)		/	
	WIDTH : W mm(inch)			1000 (+100) (39-5/16) (+3-15/16)			940 (37-1/32)		/	
	DEPTH : D mm(inch)			650 (25-19/32)			340 (13-13/32)		/	
PACK DIM	HEIGHT : H mm			338			1136		/	
	WIDTH : W mm			1211			1055		/	
	DEPTH : D mm			761			485		/	
MASS	(NET) kg(lb)			32 (71)			71 (157)		/	
	(GROSS) kg(lb)			38 (84)			79 (174)		/	
LAYERS LIMIT (actually)				6 (7)			2 (3)			
Operation Condition		Cool O.D(DBT)		18°C ~ 32°C			-15°C ~ 46°C			
		Heat O.D(DBT)		16°C ~ 30°C			-20°C ~ 24°C			
PIPING	PIPE DIAMETER mm (inch)			(Liquid)ø9.52(3/8) (Gas)ø15.88(5/8)			(Liquid)ø9.52(3/8) (Gas)ø15.88(5/8)			
	CONNECT METHOD, STD LENGTH m (ft)			flared type, 5.0(16.4)			flared type, 5.0(16.4)			
	PIPE LENGTH RANGE m (ft)			5 ~ 50 (16.4 ~ 164.0)					~	~
	I/D&O/D HEIGHT DIFFERENCE m (ft)			15 (OD located lower) / 30 (OD located higher) (49.2/98.4)						
	ADD GAS AMOUNT g/m (oz/ft)			50 (0.538)						
	PIPE LENGTH FOR ADDITIONAL GAS m (ft)			30 (98.4)						

*1: In case it is necessary to indicate the air □ow volume in (l/s), the value in (m^3/min.) shall be multiplied by 16.7 and rounded down the decimal point.
*2: If the EUROVENT Certi□ed models can be operated under the □extra-low□temperature condition, -7□C dry bulb and -8□C wet-bulb temperatures with rated voltage 230 V shall be used.
*3: Network Impedance shall be applicable for EUROPE and CHINA models.
*4: The annual consumption is calculated by multiplying the input power at 230 V (400 V) by an average of 500 hours per year in cooling mode.
*5: EER and COP classification is at 230 V (400 V) only in accordance with EU directive 2002/31/EC.
*6: SEER and SCOP classification is at 230V(400V) only in accordance with EN-14825. For heating, SCOP indicates the value of only Average heating season, Other fiche data indicates in an attached sheet.

Simultaneous (Twin) -Type

1-1. Unit Speci□cations

PE1

5. Ducted Type S-71PN1E5A×2 / U-140PE1E8A

INDOOR		MODEL	S-71PN1E5A×2							
OUTDOOR		MODEL				U-140PE1E8A				
Branch pipe		MODEL	CZ-P155BK1							
PERFORMANCE TEST CONDITION			ISO13253 / EN14511 / EN12102							
POWER SUPPLY		ø, Hz	1ø 50Hz			3ø 50Hz				
		V	220	230	240	380	400	415	Min	Max
COOLING	CAPACITY	kW	14.0	14.0	14.0				3.3	15.5
		BTU/h	47800	47800	47800				11300	52900
	CURRENT	A	1.12×2	1.08×2	1.04×2	6.95	6.60	6.35	-	-
	INPUT POWER	W	140×2	140×2	140×2	4.400k	4.400k	4.400k	-	-
		TOTAL W		-		4.680k	4.680k	4.680k	1000	6.200k
	ANNUAL CONSUMPTION	TOTAL kWh ※4		-		-	2340	-	-	-
	EER/EER CLASS	TOTAL(W/W)※5("A"~"G")	-	-	-	2.99	2.99 / C	2.99	3.30	2.50
	Erp ※6 Pdsign	kW	-	-	-	-	-	-		
	Erp ※6 SEER	(W/W)	-	-	-	-	-	-		
	Erp ※6 Annual consumption	kWh	-	-	-	-	-	-		
	Erp ※6 Class		-	-	-	-	-	-		
	POWER FACTOR	%	-	-	-	96	96	96	-	-
	NOISE INDOOR (H/M/L)	dB-A		43/41/36						
		Power Level dB		60/58/53						
	NOISE OUTDOOR (H/L)	dB-A					54/-			
		Power Level dB					71/-			
HEATING	CAPACITY	kW	16.0	16.0	16.0				4.1	18.0
		BTU/h	54600	54600	54600				14000	61400
	CURRENT	A	1.12×2	1.08×2	1.04×2	7.00	6.65	6.45	-	-
	INPUT POWER	W	140×2	140×2	140×2	4.440k	4.440k	4.440k	-	-
		TOTAL W		-		4.720k	4.720k	4.720k	1050	6.100k
	COP/COP CLASS	TOTAL(W/W)※5("A"~"G")	-	-	-	3.39	3.39 / C	3.39	3.90	2.95
	Erp ※6 Pdsign	kW	-	-	-	-	-	-		
	Erp ※6 Tbivalen	°C	-	-	-	-	-	-		
	Erp ※6 SCOP	(W/W)	-	-	-	-	-	-		
	Erp ※6 Annual consumption	kWh	-	-	-	-	-	-		
	Erp ※6 Class		-	-	-	-	-	-		
	POWER FACTOR	%	-	-	-	96	96	96	-	-
	NOISE INDOOR (H/M/L)	dB-A		43/41/36			-		/	/
		Power Level dB		60/58/53			-			
	NOISE OUTDOOR (H/L)	dB-A		-			55/-		/	/
		Power Level dB		-			71/-			
EXTRA LOW TEMP	Total CAPACITY(kW)/INPUT POWER(W)/COP				-					
MAX CURRENT(A)/MAX INPUT POWER(W)			1.28×2/160×2	1.24×2/160×2	1.20×2/160×2	11.0/6.800k	11.0/7.150k	11.0/7.450k	/	
STARTING CURRENT(A)/COMP OUTPUT(W)			-	-	-	7.00/3.0k	6.65/3.0k	6.45/3.0k	/	
NETWORK IMPEDANCE (ΩMAX.)				-			-			
FM OUTPUT (W)				120×2			90×2		/	
MOISTURE REMOVAL VOLUME		L/h(Pt/h)	9.0	(4.5×2)	(18.9)		-			
External static pressure		Pa		50 (MIN10 - MAX80)						
I/D AIR FLOW	COOL	m^3/min (ft^3/min)		[22/20/16 (777/706/565)]×2						
	HEAT	m^3/min (ft^3/min)		[22/20/16 (777/706/565)]×2						
O/D AIR FLOW	COOL	m^3/min (ft^3/min)					135	(4767)		
	HEAT	m^3/min (ft^3/min)					120	(4238)		
REFRIGERANT TYPE, AMOUNT g(oz)						R410A	3.40k	(119.9)	/	
PROD DIM	HEIGHT : H mm(inch)			250 (9-27/32)			1416 (55-3/4)		/	
	WIDTH : W mm(inch)			1000 (+100) (39-5/16) (+3-15/16)			940 (37-1/32)		/	
	DEPTH : D mm(inch)			650 (25-19/32)			340 (13-13/32)		/	
PACK DIM	HEIGHT : H mm			338			1556		/	
	WIDTH : W mm			1211			1055		/	
	DEPTH : D mm			761			485		/	
MASS	(NET) kg(lb)			32 (71)			98 (216)		/	
	(GROSS) kg(lb)			38 (84)			108 (238)		/	
LAYERS LIMIT (actually)				6 (7)			1 (2)			
Operation Condition		Cool O.D(DBT)		18°C ~ 32°C			-15°C ~ 46°C			
		Heat O.D(DBT)		16°C ~ 30°C			-20°C ~ 24°C			
PIPING	PIPE DIAMETER mm (inch)		(Liquid)ø9.52(3/8) (Gas)ø15.88(5/8)			(Liquid)ø9.52(3/8) (Gas)ø15.88(5/8)				
	CONNECT METHOD, STD LENGTH m (ft)		flared type, 5.0(16.4)			flared type, 5.0(16.4)				
	PIPE LENGTH RANGE m (ft)			5 ~ 75 (16.4 ~ 246.1)					~	~
	I/D&O/D HEIGHT DIFFERENCE m (ft)		15 (OD located lower) / 30 (OD located higher) (49.2/98.4)							
	ADD GAS AMOUNT g/m (oz/ft)			50 (0.538)						
	PIPE LENGTH FOR ADDITIONAL GAS m (ft)			30 (98.4)						

*1: In case it is necessary to indicate the air □ow volume in (l/s), the value in (m^3/min.) shall be multiplied by 16.7 and rounded down the decimal point.
*2: If the EUROVENT Certi□ed models can be operated under the □extra-low□temperature condition, -7□C dry bulb and -8□C wet-bulb temperatures with rated voltage 230 V shall be used.
*3: Network Impedance shall be applicable for EUROPE and CHINA models.
*4: The annual consumption is calculated by multiplying the input power at 230 V (400 V) by an average of 500 hours per year in cooling mode.
*5: EER and COP classification is at 230 V (400 V) only in accordance with EU directive 2002/31/EC.
*6: SEER and SCOP classification is at 230V(400V) only in accordance with EN-14825. For heating, SCOP indicates the value of only Average heating season, Other fiche data indicates in an attached sheet.

Single -Type

1-1. Unit Specifications

PE1

5. Ducted Type S-100PN1E5A / U-100PE1E8A

INDOOR		MODEL	S-100PN1E5A							
OUTDOOR		MODEL				U-100PE1E8A				
Branch pipe		MODEL				-				
PERFORMANCE TEST CONDITION			ISO13253 / EN14511 / EN14825 / EN12102							
POWER SUPPLY		ø, Hz	1ø 50Hz			3ø 50Hz				
		V	220	230	240	380	400	415	Min	Max
COOLING	CAPACITY	kW	10.0	10.0	10.0				3.3	12.5
		BTU/h	34100	34100	34100				11300	42700
	CURRENT	A	1.54	1.48	1.42	3.95	3.75	3.60	-	-
	INPUT POWER	W	205	205	205	2.465k	2.465k	2.465k	-	-
		TOTAL W		-		2.670k	2.670k	2.670k	870	3.800k
	ANNUAL CONSUMPTION	TOTAL kWh ※4		-		-	1335	-	-	-
	EER/EER CLASS	TOTAL(W/W)※5("A"~"G")	-	-	-	3.75	3.75 / A	3.75	3.79	3.29
	Erp ※6 Pdsign	kW	-	-	-	-	10.0	-		
	Erp ※6 SEER	(W/W)	-	-	-	-	5.6	-		
	Erp ※6 Annual consumption	kWh	-	-	-	-	621	-		
	Erp ※6 Class		-	-	-	-	A+	-		
	POWER FACTOR	%	-	-	-	95	95	95	-	-
	NOISE INDOOR (H/M/L)	dB-A		44/42/37			-			
		Power Level dB		65/63/58			-			
	NOISE OUTDOOR (H/L)	dB-A					52/-			
		Power Level dB					69/-			
HEATING	CAPACITY	kW	11.2	11.2	11.2				4.1	14.0
		BTU/h	38200	38200	38200				14000	47800
	CURRENT	A	1.54	1.48	1.42	4.35	4.15	4.00	-	-
	INPUT POWER	W	205	205	205	2.745k	2.745k	2.745k	-	-
		TOTAL W		-		2.950k	2.950k	2.950k	980	4.500k
	COP/COP CLASS	TOTAL(W/W)※5("A"~"G")	-	-	-	3.80	3.80 / A	3.80	4.18	3.11
	Erp ※6 Pdsign	kW	-	-	-	-	10.0	-		
	Erp ※6 Tbivalen	°C	-	-	-	-	-10	-		
	Erp ※6 SCOP	(W/W)	-	-	-	-	3.8	-		
	Erp ※6 Annual consumption	kWh	-	-	-	-	3684	-		
	Erp ※6 Class		-	-	-	-	A	-		
	POWER FACTOR	%	-	-	-	96	95	95	-	-
	NOISE INDOOR (H/M/L)	dB-A		44/42/37			-		/	/
		Power Level dB		65/63/58			-			
	NOISE OUTDOOR (H/L)	dB-A		-			52/-		/	/
		Power Level dB		-			69/-			
EXTRA LOW TEMP	Total CAPACITY(kW)/INPUT POWER(W)/COP					-				
MAX CURRENT(A)/MAX INPUT POWER(W)			2.13/275	2.07/275	2.01/275	9.0/5.550k	9.0/5.850k	9.0/6.100k	/	
STARTING CURRENT(A)/COMP OUTPUT(W)			-	-	-	4.35/3.0k	4.15/3.0k	4.00/3.00k	/	
NETWORK IMPEDANCE (ΩMAX.)				-			-			
FM OUTPUT (W)				200			90×2		/	
MOISTURE REMOVAL VOLUME		L/h(Pt/h)	6.0		(12.6)		-			
External static pressure		Pa	50 (MIN10 - MAX80)							
I/D AIR FLOW	COOL	m^3/min (ft^3/min)	36/33/26 (1271/1165/918)							
	HEAT	m^3/min (ft^3/min)	36/33/26 (1271/1165/918)							
O/D AIR FLOW	COOL	m^3/min (ft^3/min)				110		(3885)		
	HEAT	m^3/min (ft^3/min)				95		(3355)		
REFRIGERANT TYPE, AMOUNT g(oz)						R410A	3.40k	(119.9)	/	
PROD DIM	HEIGHT : H mm(inch)		250 (9-27/32)			1416 (55-3/4)			/	
	WIDTH : W mm(inch)		1200 (+100) (47-1/4) (+3-15/16)			940 (37-1/32)			/	
	DEPTH : D mm(inch)		650 (25-19/32)			340 (13-13/32)			/	
PACK DIM	HEIGHT : H mm		338			1556			/	
	WIDTH : W mm		1402			1055			/	
	DEPTH : D mm		761			485			/	
MASS	(NET) kg(lb)		41 (91)			98 (216)			/	
	(GROSS) kg(lb)		48 (106)			108 (238)			/	
LAYERS LIMIT (actually)			6 (7)			1 (2)				
Operation Condition		Cool O.D(DBT)	18°C ~ 32°C			-15°C ~ 46°C				
		Heat O.D(DBT)	16°C ~ 30°C			-20°C ~ 24°C				
PIPING	PIPE DIAMETER mm (inch)		(Liquid)ø9.52(3/8) (Gas)ø15.88(5/8)			(Liquid)ø9.52(3/8) (Gas)ø15.88(5/8)				
	CONNECT METHOD, STD LENGTH m (ft)		flared type, 5.0(16.4)			flared type, 5.0(16.4)				
	PIPE LENGTH RANGE m (ft)		5 ~ 75 (16.4 ~ 246.1)						~	~
	I/D&O/D HEIGHT DIFFERENCE m (ft)		15 (OD located lower) / 30 (OD located higher) (49.2/98.4)							
	ADD GAS AMOUNT g/m (oz/ft)		50 (0.538)							
	PIPE LENGTH FOR ADDITIONAL GAS m (ft)		30 (98.4)							

*1: In case it is necessary to indicate the air flow volume in (l/s), the value in (m^3/min.) shall be multiplied by 16.7 and rounded down the decimal point.
*2: If the EUROVENT Certified models can be operated under the extra-low temperature condition, -7°C dry bulb and -8°C wet-bulb temperatures with rated voltage 230 V shall be used.
*3: Network Impedance shall be applicable for EUROPE and CHINA models.
*4: The annual consumption is calculated by multiplying the input power at 230 V (400 V) by an average of 500 hours per year in cooling mode.
*5: EER and COP classification is at 230 V (400 V) only in accordance with EU directive 2002/31/EC.
*6: SEER and SCOP classification is at 230V(400V) only in accordance with EN-14825. For heating, SCOP indicates the value of only Average heating season, Other fiche data indicates in an attached sheet.

Single -Type

1-1. Unit Speci□cations

PE1

5. Ducted Type S-125PN1E5A / U-125PE1E8A

INDOOR		MODEL	S-125PN1E5A							
OUTDOOR		MODEL				U-125PE1E8A				
Branch pipe		MODEL				-				
PERFORMANCE TEST CONDITION			ISO13253 / EN14511 / EN12102							
POWER SUPPLY		ø, Hz	1ø 50Hz			3ø 50Hz				
		V	220	230	240	380	400	415	Min	Max
COOLING	CAPACITY	kW	12.5	12.5	12.5				3.3	14.0
		BTU/h	42700	42700	42700				11300	47800
	CURRENT	A	1.74	1.67	1.61	5.80	5.50	5.30	-	-
	INPUT POWER	W	225	225	225	3.665k	3.665k	3.665k	-	-
		TOTAL W		-		3.890k	3.890k	3.890k	1000	4.800k
	ANNUAL CONSUMPTION	TOTAL kWh ※4		-		-	1945	-	-	-
	EER/EER CLASS	TOTAL(W/W)※5("A"~"G")	-	-	-	3.21	3.21 / A	3.21	3.30	2.92
	Erp ※6 Pdsign	kW	-	-	-	-	-	-		
	Erp ※6 SEER	(W/W)	-	-	-	-	-	-		
	Erp ※6 Annual consumption	kWh	-	-	-	-	-	-		
	Erp ※6 Class		-	-	-	-	-	-		
	POWER FACTOR	%	-	-	-	96	96	96	-	-
	NOISE INDOOR (H/M/L)	dB-A		45/43/38			-			
		Power Level dB		66/64/59			-			
	NOISE OUTDOOR (H/L)	dB-A					53/-			
		Power Level dB					70/-			
HEATING	CAPACITY	kW	14.0	14.0	14.0				4.1	16.0
		BTU/h	47800	47800	47800				14000	54600
	CURRENT	A	1.74	1.67	1.61	5.80	5.50	5.30	-	-
	INPUT POWER	W	225	225	225	3.655k	3.665k	3.655k	-	-
		TOTAL W		-		3.880k	3.880k	3.880k	1050	5.400k
	COP/COP CLASS	TOTAL(W/W)※5("A"~"G")	-	-	-	3.61	3.61 / A	3.61	3.90	2.96
	Erp ※6 Pdsign	kW	-	-	-	-	-	-		
	Erp ※6 Tbivalen	°C	-	-	-	-	-	-		
	Erp ※6 SCOP	(W/W)	-	-	-	-	-	-		
	Erp ※6 Annual consumption	kWh	-	-	-	-	-	-		
	Erp ※6 Class		-	-	-	-	-	-		
	POWER FACTOR	%	-	-	-	96	96	96	-	-
	NOISE INDOOR (H/M/L)	dB-A		45/43/38			-		/	/
		Power Level dB		66/64/59			-			
	NOISE OUTDOOR (H/L)	dB-A		-			53/-		/	/
		Power Level dB		-			70/-			
EXTRA LOW TEMP	Total CAPACITY(kW)/INPUT POWER(W)/COP					-				
MAX CURRENT(A)/MAX INPUT POWER(W)			2.36/300	2.30/300	2.24/300	10.0/6.200k	10.0/6.500k	10.0/6.750k	/	
STARTING CURRENT(A)/COMP OUTPUT(W)			-	-	-	5.80/3.0k	5.50/3.0k	5.30/3.0k	/	
NETWORK IMPEDANCE (ΩMAX.)				-			-			
FM OUTPUT (W)				200			90×2		/	
MOISTURE REMOVAL VOLUME		L/h(Pt/h)	7.9		(16.6)		-			
External static pressure		Pa	50 (MIN10 - MAX80)							
I/D AIR FLOW	COOL	m^3/min (ft^3/min)	38/35/28 (1342/1236/989)							
	HEAT	m^3/min (ft^3/min)	38/35/28 (1342/1236/989)							
O/D AIR FLOW	COOL	m^3/min (ft^3/min)				130		(4591)		
	HEAT	m^3/min (ft^3/min)				110		(3885)		
REFRIGERANT TYPE, AMOUNT g(oz)						R410A	3.40k	(119.9)	/	
PROD	HEIGHT : H mm(inch)		250 (9-27/32)			1416 (55-3/4)			/	
	WIDTH : W mm(inch)		1200 (+100) (47-1/4) (+3-15/16)			940 (37-1/32)			/	
	DEPTH : D mm(inch)		650 (25-19/32)			340 (13-13/32)			/	
PACK	HEIGHT : H mm		338			1556			/	
	WIDTH : W mm		1402			1055			/	
	DEPTH : D mm		761			485			/	
MASS	(NET) kg(lb)		41 (91)			98 (216)			/	
	(GROSS) kg(lb)		48 (106)			108 (238)			/	
LAYERS LIMIT (actually)			6 (7)			1 (2)				
Operation Condition		Cool O.D(DBT)	18°C ~ 32°C			-15°C ~ 46°C				
		Heat O.D(DBT)	16°C ~ 30°C			-20°C ~ 24°C				
PIPING	PIPE DIAMETER mm (inch)		(Liquid)ø9.52(3/8) (Gas)ø15.88(5/8)			(Liquid)ø9.52(3/8) (Gas)ø15.88(5/8)				
	CONNECT METHOD, STD LENGTH m (ft)		flared type, 5.0(16.4)			flared type, 5.0(16.4)				
	PIPE LENGTH RANGE m (ft)		5 ~ 75 (16.4 ~ 246.1)						~	~
	I/D&O/D HEIGHT DIFFERENCE m (ft)		15 (OD located lower) / 30 (OD located higher) (49.2/98.4)							
	ADD GAS AMOUNT g/m (oz/ft)		50 (0.538)							
	PIPE LENGTH FOR ADDITIONAL GAS m (ft)		30 (98.4)							

*1: In case it is necessary to indicate the air □ow volume in (l/s), the value in (m^3/min.) shall be multiplied by 16.7 and rounded down the decimal point.
*2: If the EUROVENT Certi□ed models can be operated under the □extra-low□temperature condition, -7□C dry bulb and -8□C wet-bulb temperatures with rated voltage 230 V shall be used.
*3: Network Impedance shall be applicable for EUROPE and CHINA models.
*4: The annual consumption is calculated by multiplying the input power at 230 V (400 V) by an average of 500 hours per year in cooling mode.
*5: EER and COP classification is at 230 V (400 V) only in accordance with EU directive 2002/31/EC.
*6: SEER and SCOP classification is at 230V(400V) only in accordance with EN-14825. For heating, SCOP indicates the value of only Average heating season, Other fiche data indicates in an attached sheet.

Single -Type

1-1. Unit Speci□cations

PE1

5. Ducted Type S-140PN1E5A / U-140PE1E8A

INDOOR		MODEL	S-140PN1E5A							
OUTDOOR		MODEL				U-140PE1E8A				
Branch pipe		MODEL				-				
PERFORMANCE TEST CONDITION			ISO13253 / EN14511 / EN12102							
POWER SUPPLY		ø, Hz	1ø 50Hz			3ø 50Hz				
		V	220	230	240	380	400	415	Min	Max
COOLING	CAPACITY	kW	14.0	14.0	14.0				3.3	15.5
		BTU/h	47800	47800	47800				11300	52900
	CURRENT	A	1.89	1.82	1.74	6.95	6.60	6.35	-	-
	INPUT POWER	W	250	250	250	4.400k	4.400k	4.400k	-	-
		TOTAL W		-		4.650k	4.650k	4.650k	1000	6.200k
	ANNUAL CONSUMPTION	TOTAL kWh ※4		-		-	2325	-	-	-
	EER/EER CLASS	TOTAL(W/W)※5("A"~"G")	-	-	-	3.01	3.01 / B	3.01	3.30	2.50
	Erp ※6 Pdsign	kW	-	-	-	-	-	-		
	Erp ※6 SEER	(W/W)	-	-	-	-	-	-		
	Erp ※6 Annual consumption	kWh	-	-	-	-	-	-		
	Erp ※6 Class		-	-	-	-	-	-		
	POWER FACTOR	%	-	-	-	96	96	96	-	-
	NOISE INDOOR (H/M/L)	dB-A		46/44/39			-			
		Power Level dB		67/65/60			-			
	NOISE OUTDOOR (H/L)	dB-A					54/-			
		Power Level dB					71/-			
HEATING	CAPACITY	kW	16.0	16.0	16.0				4.1	18.0
		BTU/h	54600	54600	54600				14000	61400
	CURRENT	A	1.89	1.82	1.74	7.00	6.65	6.45	-	-
	INPUT POWER	W	250	250	250	4.440k	4.440k	4.440k	-	-
		TOTAL W		-		4.690k	4.690k	4.690k	1050	6.100k
	COP/COP CLASS	TOTAL(W/W)※5("A"~"G")	-	-	-	3.41	3.41 / B	3.41	3.90	2.95
	Erp ※6 Pdsign	kW	-	-	-	-	-	-		
	Erp ※6 Tbivalen	°C	-	-	-	-	-	-		
	Erp ※6 SCOP	(W/W)	-	-	-	-	-	-		
	Erp ※6 Annual consumption	kWh	-	-	-	-	-	-		
	Erp ※6 Class		-	-	-	-	-	-		
	POWER FACTOR	%	-	-	-	96	96	96	-	-
	NOISE INDOOR (H/M/L)	dB-A		46/44/39			-		/	/
		Power Level dB		67/65/60			-			
	NOISE OUTDOOR (H/L)	dB-A		-			55/-		/	/
		Power Level dB		-			71/-			
EXTRA LOW TEMP	Total CAPACITY(kW)INPUT POWER(W)COP					-				
MAX CURRENT(A)/MAX INPUT POWER(W)			2.59/345	2.53/345	2.47/345	11.0/6.800k	11.0/7.150k	11.0/7.450k	/	
STARTING CURRENT(A)/COMP OUTPUT(W)			-	-	-	7.00/3.0k	6.65/3.0k	6.45/3.0k	/	
NETWORK IMPEDANCE (ΩMAX.)				-			-			
FM OUTPUT (W)				200			90×2		/	
MOISTURE REMOVAL VOLUME		L/h(Pt/h)	9.0		(18.9)		-			
External static pressure		Pa	50 (MIN10 - MAX80)							
I/D AIR FLOW	COOL	m³/min (ft³/min)	40/37/30 (1413/1307/1059)							
	HEAT	m³/min (ft³/min)	40/37/30 (1413/1307/1059)							
O/D AIR FLOW	COOL	m³/min (ft³/min)				135		(4767)		
	HEAT	m³/min (ft³/min)				120		(4238)		
REFRIGERANT TYPE, AMOUNT g(oz)						R410A	3.40k	(119.9)	/	
PROD IM	HEIGHT : H mm(inch)		250 (9-27/32)			1416 (55-3/4)			/	
	WIDTH : W mm(inch)		1200 (+100) (47-1/4) (+3-15/16)			940 (37-1/32)			/	
	DEPTH : D mm(inch)		650 (25-19/32)			340 (13-13/32)			/	
PAC DIM	HEIGHT : H mm		338			1556			/	
	WIDTH : W mm		1402			1055			/	
	DEPTH : D mm		761			485			/	
MASS	(NET) kg(lb)		41 (91)			98 (216)			/	
	(GROSS) kg(lb)		48 (106)			108 (238)			/	
LAYERS LIMIT (actually)			6 (7)			1 (2)				
Operation Condition		Cool O.D(DBT)	18°C ~ 32°C			-15°C ~ 46°C				
		Heat O.D(DBT)	16°C ~ 30°C			-20°C ~ 24°C				
PIPING	PIPE DIAMETER mm (inch)		(Liquid)ø9.52(3/8) (Gas)ø15.88(5/8)			(Liquid)ø9.52(3/8) (Gas)ø15.88(5/8)				
	CONNECT METHOD, STD LENGTH m (ft)		flared type, 5.0(16.4)			flared type, 5.0(16.4)				
	PIPE LENGTH RANGE m (ft)		5 ~ 75 (16.4 ~ 246.1)						~	~
	I/D&O/D HEIGHT DIFFERENCE m (ft)		15 (OD located lower) / 30 (OD located higher) (49.2/98.4)							
	ADD GAS AMOUNT g/m (oz/ft)		50 (0.538)							
	PIPE LENGTH FOR ADDITIONAL GAS m (ft)		30 (98.4)							

*1: In case it is necessary to indicate the air □ow volume in (l/s), the value in (m³/min.) shall be multiplied by 16.7 and rounded down the decimal point.
*2: If the EUROVENT Certi□ed models can be operated under the □extra-low□temperature condition, -7□C dry bulb and -8□C wet-bulb temperatures with rated voltage 230 V shall be used.
*3: Network Impedance shall be applicable for EUROPE and CHINA models.
*4: The annual consumption is calculated by multiplying the input power at 230 V (400 V) by an average of 500 hours per year in cooling mode.
*5: EER and COP classification is at 230 V (400 V) only in accordance with EU directive 2002/31/EC.
*6: SEER and SCOP classification is at 230V(400V) only in accordance with EN-14825. For heating, SCOP indicates the value of only Average heating season, Other fiche data indicates in an attached sheet.

Simultaneous (Twin) -Type

1-1. Unit Speci□cations

PEY1

1. 4-Way Cassette Type S-36PU1E5A×2 / U-71PEY1E5A

INDOOR		MODEL	S-36PU1E5A×2							
PANEL		MODEL	CZ-KPU21×2			-				
OUTDOOR		MODEL				U-71PEY1E5				
Branch pipe		MODEL	-							
PERFORMANCE TEST CONDITION			ISO5151 / EN14511 / EN14825 / EN12102							
POWER SUPPLY		□, Hz	1□50Hz			1□50Hz				
		V	220	230	240	220	230	240	Min	Max
COOLING	CAPACITY	kW	7.1	7.1	7.1				2.0	7.7
		BTU/h	24200	24200	24200				6800	26300
	CURRENT	A	0.19×2	0.19×2	0.18×2	10.70	10.30	9.80	-	-
	INPUT POWER	W	20×2	20×2	20×2	2.150k	2.150k	2.150k	-	-
		TOTAL W	-			2.190k	2.190k	2.190k	325	2.800k
	ANNUAL CONSUMPTION	TOTAL kWh ※4	-			1094	1095	1096	-	-
	EER/EER CLASS	TOTAL(W/W)※5(("A"□"G")	-	-	-	3.24	3.24 / A	3.24	6.15	2.75
	Erp ※6 Pdsign	kW	-	-	-	-	7.1	-		
	Erp ※6 SEER	(W/W)	-	-	-	-	6.3	-		
	Erp ※6 Annual consumption	kWh	-	-	-	-	394	-		
	Erp ※6 Class		-	-	-	-	A++	-		
	POWER FACTOR	□	-	-	-	91	91	91	-	-
	NOISE INDOOR	dB-A (H/M/L)	30/28/27							
		Power Level dB	47/45/44							
	NOISE OUTDOOR	dB-A (H/L)				50/-				
		Power Level dB				70/-				
HEATING	CAPACITY	kW	7.1	7.1	7.1				1.8	8.1
		BTU/h	24200	24200	24200				6100	27600
	CURRENT	A	0.17×2	0.17×2	0.16×2	9.10	8.70	8.30	-	-
	INPUT POWER	W	20×2	20×2	20×2	1.840k	1.840k	1.840k	-	-
		TOTAL W	-			1.880k	1.880k	1.880k	275	2.510k
	COP/COP CLASS	TOTAL(W/W)※5(("A"□"G")	-	-	-	3.78	3.78 / A	3.78	6.55	3.23
	Erp ※6 Pdsign	kW	-	-	-	-	6.0	-		
	Erp ※6 Tbivalen	°C	-	-	-	-	-6	-		
	Erp ※6 SCOP	(W/W)	-	-	-	-	4.0	-		
	Erp ※6 Annual consumption	kWh	-	-	-	-	2100	-		
	Erp ※6 Class		-	-	-	-	A+	-		
	POWER FACTOR	□	-	-	-	92	92	92	-	-
	NOISE INDOOR	dB-A (H/M/L)	30/28/27			-			/	/
		Power Level dB	47/45/44			-				
	NOISE OUTDOOR	dB-A (H/L)	-			52/-			/	/
		Power Level dB	-			70/-				
EXTRALOW TEMP	Total CAPACITY(kW)/INPUT POWER(W)/COP		-							
MAX CURRENT(A)/MAX INPUT POWER(W)			0.19×2/20×2	0.19×2/20×2	0.18×2/20×2	18/3.64k	18/3.81k	18/3.97k	/	
STARTING CURRENT(A)/COMP OUTPUT(W)			-	-	-	10.7/2.19k	10.3/2.19k	9.8/2.19k	/	
NETWORK IMPEDANCE (ΩMAX.)			-			-				
FM OUTPUT (W)			60×2			90			/	
MOISTURE REMOVAL VOLUME		L/h(Pt/h)	4.2 (2.1×2) (8.8)			-				
External static pressure		Pa	-							
I/D AIR FLOW	COOL	m^3/min (ft^3/min)	[14/13/12 (494/459/424)]×2							
	HEAT	m^3/min (ft^3/min)	[14/13/12 (494/459/424)]×2							
O/D AIR FLOW	COOL	m^3/min (ft^3/min)				39 (1377)				
	HEAT	m^3/min (ft^3/min)				39 (1377)				
REFRIGERANT TYPE, AMOUNT g(oz)						R410A 1.70k (60.0)			/	
PROM	HEIGHT : H mm(inch)		256 (10-3/32)			569 (22-13/32)			/	
	WIDTH : W mm(inch)		840 (33-3/32)			790 (31-7/64)			/	
	DEPTH : D mm(inch)		840 (33-3/32)			285 (11-7/32)			/	
PACM	HEIGHT : H mm		298			645			/	
	WIDTH : W mm		929			921			/	
	DEPTH : D mm		929			386			/	
MASS	(NET) kg(lb)		23 (51)			42 (93)			/	
	(GROSS) kg(lb)		29 (64)			46 (101)			/	
LAYERS LIMIT (actually)			11 (12)			4 (5)				
Operation Condition		Cool (DBT)	18°C □32°C			-10°C □43°C				
		Heat (DBT)	16°C □30°C			-15°C □24°C				
PIPING	PIPE DIAMETER mm (inch)		(Liquid)□6.35(1/4) (Gas)□12.7(1/2)			(Liquid)□9.52(3/8) (Gas)□15.88(5/8)				
	CONNECT METHOD, STD LENGTH m (ft)		" ared type, 5.0(16.4)			" ared type, 5.0(16.4)				
	PIPE LENGTH RANGE m (ft)		5 □50 (16.4 □164)						□	□
	I/D&O/D HEIGHT DIFFERENCE m (ft)		15 (OD located lower) / 30 (OD located higher) (49.2/98.4)							
	ADD GAS AMOUNT g/m (oz/ft)		40 (0.430)							
	PIPE LENGTH FOR ADDITIONAL GAS m (ft)		20 (65.6)							

*1: In case it is necessary to indicate the air " ow volume in (l/s), the value in (m^3/min.) shall be multiplied by 16.7 and rounded down the decimal point.
*2: If the EUROVENT Certi"ed models can be operated under the •extra-low□temperature condition, -7°C dry bulb and -8°C wet-bulb temperatures with rated voltage 230 V shall be used.
*3: Network Impedance shall be applicable for EUROPE and CHINA models.
*4: The annual consumption is calculated by multiplying the input power at 230 V (400 V) by an average of 500 hours per year in cooling mode.
*5: EER and COP classification is at 230 V (400 V) only in accordance with EU directive 2002/31/EC.
*6: SEER and SCOP classification is at 230V(400V) only in accordance with EN-14825. For heating, SCOP indicates the value of only Average heating season, Other fiche data indicates in an attached sheet.

Simultaneous (Twin) -Type

1-1. Unit Specifications

PEY1

1. 4-Way Cassette Type S-50PU1E5A×2 / U-100PEY1E5

INDOOR		MODEL	S-50PU1E5A×2							
PANEL		MODEL	CZ-KPU21×2							
OUTDOOR		MODEL				U-100PEY1E5				
Branch pipe		MODEL	CZ-P155BK1							
PERFORMANCE TEST CONDITION			ISO5151 / EN14511 / EN14825 / EN12102							
POWER SUPPLY		ø, Hz	1ø 50Hz			1ø 50Hz				
		V	220	230	240	220	230	240	Min	Max
COOLING	CAPACITY	kW	10.0	10.0	10.0				2.7	11.5
		BTU/h	34100	34100	34100				9200	39200
	CURRENT	A	0.22×2	0.22×2	0.21×2	15.3	14.6	14.0	-	-
	INPUT POWER	W	25×2	25×2	25×2	3.170k	3.170k	3.170k	-	-
		TOTAL W		-		3.220k	3.220k	3.220k	530	4.200k
	ANNUAL CONSUMPTION	TOTAL kWh ※4		-		-	1610	-	-	-
	EER/EER CLASS	TOTAL(W/W)※5("A"~"G")	-	-	-	3.11	3.11 / B	3.11	5.09	2.74
	Erp ※6 Pdsign	kW	-	-	-	-	10.0	-		
	Erp ※6 SEER	(W/W)	-	-	-	-	6.4	-		
	Erp ※6 Annual consumption	kWh	-	-	-	-	547	-		
	Erp ※6 Class		-	-	-	-	A++	-		
	POWER FACTOR	%	-	-	-	94	94	94	-	-
	NOISE INDOOR (H/M/L)	dB-A		32/29/27			-			
		Power Level dB		49/46/44			-			
	NOISE OUTDOOR (H/L)	dB-A					54/-			
		Power Level dB					70/-			
HEATING	CAPACITY	kW	10.0	10.0	10.0				2.1	13.8
		BTU/h	34100	34100	34100				7200	47100
	CURRENT	A	0.20×2	0.20×2	0.19×2	12.2	11.8	11.3	-	-
	INPUT POWER	W	25×2	25×2	25×2	2.580k	2.580k	2.580k	-	-
		TOTAL W		-		2.630k	2.630k	2.630k	410	4.000k
	COP/COP CLASS	TOTAL(W/W)※5("A"~"G")	-	-	-	3.80	3.80 / A	3.80	5.12	3.45
	Erp ※6 Pdsign	kW	-	-	-	-	10.0	-		
	Erp ※6 Tbivalen	°C	-	-	-	-	-8	-		
	Erp ※6 SCOP	(W/W)	-	-	-	-	4.0	-		
	Erp ※6 Annual consumption	kWh	-	-	-	-	3500	-		
	Erp ※6 Class		-	-	-	-	A+	-		
	POWER FACTOR	%	-	-	-	96	95	95	-	-
	NOISE INDOOR (H/M/L)	dB-A		32/29/27			-		/	/
		Power Level dB		49/46/44			-			
	NOISE OUTDOOR (H/L)	dB-A		-			54/-		/	/
		Power Level dB		-			70/-			
EXTRA LOW TEMP	Total CAPACITY(kW)/INPUT POWER(W)/COP					-				
MAX CURRENT(A)/MAX INPUT POWER(W)			0.22×2/25×2	0.22×2/25×2	0.21×2/25×2	25.0/5.300k	25.0/5.500k	25.0/5.700k	/	
STARTING CURRENT(A)/COMP OUTPUT(W)			-	-	-	15.3/1.7k	14.6/1.7k	14.0/1.7k	/	
NETWORK IMPEDANCE (ΩMAX.)				-			-			
FM OUTPUT (W)				60×2			90		/	
MOISTURE REMOVAL VOLUME		L/h(Pt/h)	6.0	(3.0×2)	(12.6)		-			
External static pressure		Pa		-						
I/D AIR FLOW	COOL	m³/min (ft³/min)		[16/13.5/12 (565/477/424)]×2						
	HEAT	m³/min (ft³/min)		[16/13.5/12 (565/477/424)]×2						
O/D AIR FLOW	COOL	m³/min (ft³/min)				76		(2684)		
	HEAT	m³/min (ft³/min)				67		(2366)		
REFRIGERANT TYPE, AMOUNT g(oz)						R410A	2.60k	(91.7)	/	
PROD	HEIGHT : H mm(inch)			256 (10-3/32)			996 (39-7/32)		/	
	WIDTH : W mm(inch)			840 (33-3/32)			940 (37-1/32)		/	
	DEPTH : D mm(inch)			840 (33-3/32)			340 (13-13/32)		/	
PACK	HEIGHT : H mm			298			1136		/	
	WIDTH : W mm			929			1055		/	
	DEPTH : D mm			929			485		/	
MASS	(NET) kg(lb)			23 (51)			73 (161)		/	
	(GROSS) kg(lb)			29 (64)			81 (179)		/	
LAYERS LIMIT (actually)				11 (12)			2 (3)			
Operation Condition		Cool O.D(DBT)		18°C ~ 32°C			-10°C ~ 43°C			
		Heat O.D(DBT)		16°C ~ 30°C			-15°C ~ 24°C			
PIPING	PIPE DIAMETER mm (inch)		(Liquid)ø6.35(1/4) (Gas)ø12.7(1/2)			(Liquid)ø9.52(3/8) (Gas)ø15.88(5/8)				
	CONNECT METHOD, STD LENGTH m (ft)		flared type, 5.0(16.4)			flared type, 5.0(16.4)				
	PIPE LENGTH RANGE m (ft)		5 ~ 50 (16.4 ~ 164.0)						~	~
	I/D&O/D HEIGHT DIFFERENCE m (ft)		15 (OD located lower) / 30 (OD located higher) (49.2/98.4)							
	ADD GAS AMOUNT g/m (oz/ft)		50 (0.538)							
	PIPE LENGTH FOR ADDITIONAL GAS m (ft)		30 (98.4)							

*1: In case it is necessary to indicate the air flow volume in (l/s), the value in (m³/min.) shall be multiplied by 16.7 and rounded down the decimal point.
*2: If the EUROVENT Certified models can be operated under the "extra-low" temperature condition, -7°C dry bulb and -8°C wet-bulb temperatures with rated voltage 230 V shall be used.
*3: Network Impedance shall be applicable for EUROPE and CHINA models.
*4: The annual consumption is calculated by multiplying the input power at 230 V (400 V) by an average of 500 hours per year in cooling mode.
*5: EER and COP classification is at 230 V (400 V) only in accordance with EU directive 2002/31/EC.
*6: SEER and SCOP classification is at 230V(400V) only in accordance with EN-14825. For heating, SCOP indicates the value of only Average heating season, Other fiche data indicates in an attached sheet.

Single-Type

1-1. Unit Speci□cations

PEY1

1. 4-Way Cassette Type S-60PU1E5A / U-60PEY1E5

INDOOR		MODEL	S-60PU1E5A							
PANEL		MODEL	CZ-KPU21			-				
OUTDOOR		MODEL				U-60PEY1E5				
Branch pipe		MODEL	-							
PERFORMANCE TEST CONDITION			ISO5151 / EN14511 / EN14825 / EN12102							
POWER SUPPLY		□, Hz	1□50Hz			1□50Hz				
		V	220	230	240	220	230	240	Min	Max
COOLING	CAPACITY	kW	6.0	6.0	6.0				2.0	7.0
		BTU/h	20500	20500	20500				6800	23900
	CURRENT	A	0.32	0.31	0.30	8.30	7.90	7.60	-	-
	INPUT POWER	W	35	35	35	1.655k	1.655k	1.655k	-	-
		TOTAL W	-			1.690k	1.690k	1.690k	325	2.500k
	ANNUAL CONSUMPTION	TOTAL kWh ※4	-			845	845	845	-	-
	EER/EER CLASS	TOTAL(W/W)※5/("A"□"G")	-	-	-	3.55	3.55 / A	3.55	6.15	2.80
	Erp ※6 Pdsign	kW	-	-	-	-	6.0	-		
	Erp ※6 SEER	(W/W)	-	-	-	-	6.8	-		
	Erp ※6 Annual consumption	kWh	-	-	-	-	309	-		
	Erp ※6 Class		-	-	-	-	A++	-		
	POWER FACTOR	□	-	-	-	91	91	91	-	-
	NOISE INDOOR	dB-A (H/M/L)	36/31/28							
		Power Level dB	53/48/45							
	NOISE OUTDOOR	dB-A (H/L)				46/-				
		Power Level dB				65/-				
HEATING	CAPACITY	kW	6.0	6.0	6.0				1.8	7.0
		BTU/h	20500	20500	20500				6100	23900
	CURRENT	A	0.30	0.30	0.29	7.20	6.90	6.60	-	-
	INPUT POWER	W	35	35	35	1.445k	1.445k	1.445k	-	-
		TOTAL W	-			1.480k	1.480k	1.480k	275	2.155k
	COP/COP CLASS	TOTAL(W/W)※5/("A"□"G")	-	-	-	4.05	4.05 / A	4.05	6.55	3.25
	Erp ※6 Pdsign	kW	-	-	-	-	6.0	-		
	Erp ※6 Tbivalen	°C	-	-	-	-	-6	-		
	Erp ※6 SCOP	(W/W)	-	-	-	-	4.0	-		
	Erp ※6 Annual consumption	kWh	-	-	-	-	2100	-		
	Erp ※6 Class		-	-	-	-	A+	-		
	POWER FACTOR	□	-	-	-	91	91	91	-	-
	NOISE INDOOR	dB-A (H/M/L)	36/31/28			-			/	/
		Power Level dB	53/48/45			-				
	NOISE OUTDOOR	dB-A (H/L)	-			50/-			/	/
		Power Level dB	-			69/-				
EXTRA LOW TEMP	Total CAPACITY(kW)/INPUT POWER(W)/COP		-							
MAX CURRENT(A)/MAX INPUT POWER(W)			0.32/35	0.31/35	0.30/35	18/3.64k	18/3.77k	18/3.93k	/	
STARTING CURRENT(A)/COMP OUTPUT(W)			-	-	-	8.30/1.7k	7.90/1.7k	7.60/1.7k	/	
NETWORK IMPEDANCE (ΩMAX.)			-			-				
FM OUTPUT (W)			60			90			/	
MOISTURE REMOVAL VOLUME		L/h(Pt/h)	3.40 (7.1)			-				
External static pressure		Pa	-							
I/D AIR FLOW	COOL	m^3/min (ft^3/min)	21/17/14 (742/600/494)							
	HEAT	m^3/min (ft^3/min)	21/17/14 (742/600/494)							
O/D AIR FLOW	COOL	m^3/min (ft^3/min)				30 (1067)				
	HEAT	m^3/min (ft^3/min)				35 (1229)				
REFRIGERANT TYPE, AMOUNT g(oz)						R410A 1.70k (60.0)			/	
PROD IM	HEIGHT : H mm(inch)		256 (10-3/32)			569 (22-13/32)			/	
	WIDTH : W mm(inch)		840 (33-3/32)			790 (31-7/64)			/	
	DEPTH : D mm(inch)		840 (33-3/32)			285 (11-7/32)			/	
PACK DIM	HEIGHT : H mm		298			645			/	
	WIDTH : W mm		929			921			/	
	DEPTH : D mm		929			386			/	
MASS	(NET) kg(lb)		24 (53)			42 (93)			/	
	(GROSS) kg(lb)		30 (67)			46 (101)			/	
LAYERS LIMIT (actually)			11 (12)			4 (5)				
Operation Condition		Cool (DBT)	18°C □32°C			-10°C □43°C				
		Heat (DBT)	16°C □30°C			-15°C □24°C				
PIPING	PIPE DIAMETER mm (inch)		(Liquid)□9.52(3/8) (Gas)□15.88(5/8)			(Liquid)□9.52(3/8) (Gas)□15.88(5/8)				
	CONNECT METHOD, STD LENGTH m (ft)		" ared type, 5.0(16.4)			" ared type, 5.0(16.4)				
	PIPE LENGTH RANGE m (ft)		5 □50 (16.4 □164)						□	□
	I/D&O/D HEIGHT DIFFERENCE m (ft)		15 (OD located lower) / 30 (OD located higher) (49.2/98.4)							
	ADD GAS AMOUNT g/m (oz/ft)		40 (0.430)							
	PIPE LENGTH FOR ADDITIONAL GAS m (ft)		20 (65.6)							

*1: In case it is necessary to indicate the air " ow volume in (l/s), the value in (m^3/min.) shall be multiplied by 16.7 and rounded down the decimal point.
*2: If the EUROVENT Certi"ed models can be operated under the •extra-low□temperature condition, -7°C dry bulb and -8°C wet-bulb temperatures with rated voltage 230 V shall be used.
*3: Network Impedance shall be applicable for EUROPE and CHINA models.
*4: The annual consumption is calculated by multiplying the input power at 230 V (400 V) by an average of 500 hours per year in cooling mode.
*5: EER and COP classification is at 230 V (400 V) only in accordance with EU directive 2002/31/EC.
*6: SEER and SCOP classification is at 230V(400V) only in accordance with EN-14825. For heating, SCOP indicates the value of only Average heating season, Other fiche data indicates in an attached sheet.

Simultaneous (Twin) -Type

1-1. Unit Specifications

PEY1

1. 4-Way Cassette Type S-60PU1E5A×2 / U-125PEY1E5

INDOOR		MODEL	S-60PU1E5A×2							
PANEL		MODEL	CZ-KPU21×2							
OUTDOOR		MODEL				U-125PEY1E5				
Branch pipe		MODEL	CZ-P155BK1							
PERFORMANCE TEST CONDITION			ISO5151 / EN14511 / EN12102							
POWER SUPPLY		ø, Hz	1ø 50Hz			1ø 50Hz				
		V	220	230	240	220	230	240	Min	Max
COOLING	CAPACITY	kW	12.5	12.5	12.5				3.8	13.5
		BTU/h	42700	42700	42700				13000	46100
	CURRENT	A	0.32×2	0.31×2	0.30×2	19.4	18.5	17.7	-	-
	INPUT POWER	W	35×2	35×2	35×2	3.950k	3.950k	3.950k	-	-
		TOTAL W		-		4.020k	4.020k	4.020k	900	5.000k
	ANNUAL CONSUMPTION	TOTAL kWh ※4		-		-	2010	-	-	-
	EER/EER CLASS	TOTAL(W/W)※5("A"~"G")	-	-	-	3.11	3.11 / B	3.11	4.22	2.70
	Erp ※6 Pdsign	kW	-	-	-	-	-	-		
	Erp ※6 SEER	(W/W)	-	-	-	-	-	-		
	Erp ※6 Annual consumption	kWh	-	-	-	-	-	-		
	Erp ※6 Class		-	-	-	-	-	-		
	POWER FACTOR	%	-	-	-	93	93	93	-	-
	NOISE INDOOR (H/M/L)	dB-A		36/31/28			-			
		Power Level dB		53/48/45			-			
	NOISE OUTDOOR (H/L)	dB-A					56/-			
		Power Level dB					73/-			
HEATING	CAPACITY	kW	12.5	12.5	12.5				3.4	15.0
		BTU/h	42700	42700	42700				11600	51200
	CURRENT	A	0.30×2	0.30×2	0.29×2	15.6	14.9	14.3	-	-
	INPUT POWER	W	35×2	35×2	35×2	3.220k	3.220k	3.220k	-	-
		TOTAL W		-		3.290k	3.290k	3.290k	730	4.400k
	COP/COP CLASS	TOTAL(W/W)※5("A"~"G")	-	-	-	3.80	3.80 / A	3.80	4.66	3.41
	Erp ※6 Pdsign	kW	-	-	-	-	-	-		
	Erp ※6 Tbivalen	°C	-	-	-	-	-	-		
	Erp ※6 SCOP	(W/W)	-	-	-	-	-	-		
	Erp ※6 Annual consumption	kWh	-	-	-	-	-	-		
	Erp ※6 Class		-	-	-	-	-	-		
	POWER FACTOR	%	-	-	-	94	94	94	-	-
	NOISE INDOOR (H/M/L)	dB-A		36/31/28			-		/	/
		Power Level dB		53/48/45			-			
	NOISE OUTDOOR (H/L)	dB-A		-			56/-		/	/
		Power Level dB		-			73/-			
EXTRA LOW TEMP	Total CAPACITY(kW)/INPUT POWER(W)/COP					-				
MAX CURRENT(A)/MAX INPUT POWER(W)			0.32×2/35×2	0.31×2/35×2	0.30×2/35×2	29.0/6.000k	29.0/6.300k	29.0/6.600k	/	
STARTING CURRENT(A)/COMP OUTPUT(W)			-	-	-	19.4/3.0k	18.5/3.0k	17.7/3.0k	/	
NETWORK IMPEDANCE (ΩMAX.)				-			-			
FM OUTPUT (W)				60×2			90		/	
MOISTURE REMOVAL VOLUME		L/h(Pt/h)	7.9	(3.95×2)	(16.6)		-			
External static pressure		Pa		-						
I/D AIR FLOW	COOL	m^3/min (ft^3/min)		[21/17/14 (742/600/494)]×2						
	HEAT	m^3/min (ft^3/min)		[21/17/14 (742/600/494)]×2						
O/D AIR FLOW	COOL	m^3/min (ft^3/min)				80		(2825)		
	HEAT	m^3/min (ft^3/min)				73		(2578)		
REFRIGERANT TYPE, AMOUNT g(oz)						R410A	3.20k	(112.9)	/	
PROD DIM	HEIGHT : H mm(inch)			256 (10-3/32)			996 (39-7/32)		/	
	WIDTH : W mm(inch)			840 (33-3/32)			940 (37-1/32)		/	
	DEPTH : D mm(inch)			840 (33-3/32)			340 (13-13/32)		/	
PACK DIM	HEIGHT : H mm			298			1136		/	
	WIDTH : W mm			929			1055		/	
	DEPTH : D mm			929			485		/	
MASS	(NET) kg(lb)			24 (53)			85 (187)		/	
	(GROSS) kg(lb)			30 (67)			93 (205)		/	
LAYERS LIMIT (actually)				11 (12)			2 (3)			
Operation Condition		Cool O.D(DBT)		18°C ~ 32°C			-10°C ~ 43°C			
		Heat O.D(DBT)		16°C ~ 30°C			-15°C ~ 24°C			
PIPING	PIPE DIAMETER mm (inch)		(Liquid)ø9.52(3/8) (Gas)ø15.88(5/8)			(Liquid)ø9.52(3/8) (Gas)ø15.88(5/8)				
	CONNECT METHOD, STD LENGTH m (ft)		flared type, 5.0(16.4)			flared type, 5.0(16.4)				
	PIPE LENGTH RANGE m (ft)		5 ~ 50 (16.4 ~ 164.0)						~	~
	I/D&O/D HEIGHT DIFFERENCE m (ft)		15 (OD located lower) / 30 (OD located higher) (49.2/98.4)							
	ADD GAS AMOUNT g/m (oz/ft)		50 (0.538)							
	PIPE LENGTH FOR ADDITIONAL GAS m (ft)		30 (98.4)							

*1: In case it is necessary to indicate the air □ow volume in (l/s), the value in (m^3/min.) shall be multiplied by 16.7 and rounded down the decimal point.
*2: If the EUROVENT Certi□ed models can be operated under the □extra-low□temperature condition, -7□C dry bulb and -8□C wet-bulb temperatures with rated voltage 230 V shall be used.
*3: Network Impedance shall be applicable for EUROPE and CHINA models.
*4: The annual consumption is calculated by multiplying the input power at 230 V (400 V) by an average of 500 hours per year in cooling mode.
*5: EER and COP classification is at 230 V (400 V) only in accordance with EU directive 2002/31/EC.
*6: SEER and SCOP classification is at 230V(400V) only in accordance with EN-14825. For heating, SCOP indicates the value of only Average heating season, Other fiche data indicates in an attached sheet.

Single-Type

1-1. Unit Speci□cations

PEY1

1. 4-Way Cassette Type S-71PU1E5A / U-71PEY1E5

INDOOR		MODEL	S-71PU1E5A							
PANEL		MODEL	CZ-KPU21			-				
OUTDOOR		MODEL				U-71PEY1E5				
Branch pipe		MODEL	-							
PERFORMANCE TEST CONDITION			ISO5151 / EN14511 / EN14825 / EN12102							
POWER SUPPLY		□, Hz	1□ 50Hz			1□ 50Hz				
		V	220	230	240	220	230	240	Min	Max
COOLING	CAPACITY	kW	7.1	7.1	7.1				2.0	7.7
		BTU/h	24200	24200	24200				6800	26300
	CURRENT	A	0.36	0.33	0.32	10.70	10.30	9.80	-	-
	INPUT POWER	W	40	40	40	2.150k	2.150k	2.150k	-	-
		TOTAL W	-			2.190k	2.190k	2.190k	325	2.800k
	ANNUAL CONSUMPTION	TOTAL kWh ※4	-			1095	1095	1095	-	-
	EER/EER CLASS	TOTAL(W/W)※5/("A"□"G")	-	-	-	3.24	3.24 / A	3.24	6.15	2.75
	Erp ※6 Pdsign	kW	-	-	-	-	7.1	-		
	Erp ※6 SEER	(W/W)	-	-	-	-	6.3	-		
	Erp ※6 Annual consumption	kWh	-	-	-	-	394	-		
	Erp ※6 Class		-	-	-	-	A++	-		
	POWER FACTOR	□	-	-	-	91	91	91	-	-
	NOISE INDOOR	dB-A (H/M/L)	37/31/28							
		Power Level dB	54/48/45							
	NOISE OUTDOOR	dB-A (H/L)				50/-				
		Power Level dB				70/-				
HEATING	CAPACITY	kW	7.1	7.1	7.1				1.8	8.1
		BTU/h	24200	24200	24200				6100	27600
	CURRENT	A	0.35	0.32	0.31	9.10	8.70	8.30	-	-
	INPUT POWER	W	40	40	40	1.840k	1.840k	1.840k	-	-
		TOTAL W	-			1.880k	1.880k	1.880k	275	2.510k
	COP/COP CLASS	TOTAL(W/W)※5/("A"□"G")	-	-	-	3.78	3.78 / A	3.78	6.55	3.23
	Erp ※6 Pdsign	kW	-	-	-	-	6.0	-		
	Erp ※6 Tbivalen	°C	-	-	-	-	-6	-		
	Erp ※6 SCOP	(W/W)	-	-	-	-	4.0	-		
	Erp ※6 Annual consumption	kWh	-	-	-	-	2100	-		
	Erp ※6 Class		-	-	-	-	A+	-		
	POWER FACTOR	□	-	-	-	92	92	92	-	-
	NOISE INDOOR	dB-A (H/M/L)	37/31/28			-			/	/
		Power Level dB	54/48/45			-				
	NOISE OUTDOOR	dB-A (H/L)	-			52/-			/	/
		Power Level dB	-			70/-				
EXTRA LOW TEMP	Total CAPACITY(kW)/INPUT POWER(W)/COP		-							
MAX CURRENT(A)/MAX INPUT POWER(W)			0.36/40	0.33/40	0.32/40	18/3.64k	18/3.81k	18/3.97k	/	
STARTING CURRENT(A)/COMP OUTPUT(W)			-	-	-	10.7/2.2k	10.3/2.2k	9.80/2.2k	/	
NETWORK IMPEDANCE (ΩMAX.)			-			-				
FM OUTPUT (W)			60			90			/	
MOISTURE REMOVAL VOLUME		L/h(Pt/h)	4.2		(8.8)	-				
External static pressure		Pa	-							
I/D AIR FLOW	COOL	m^3/min (ft^3/min)	22/17/14 (777/600/494)							
I/D AIR FLOW	HEAT	m^3/min (ft^3/min)	22/17/14 (777/600/494)							
O/D AIR FLOW	COOL	m^3/min (ft^3/min)				39		(1377)		
O/D AIR FLOW	HEAT	m^3/min (ft^3/min)				39		(1377)		
REFRIGERANT TYPE, AMOUNT g(oz)						R410A	1.70k	(60.0)	/	
PROD IM	HEIGHT : H mm(inch)		256 (10-3/32)			569 (22-13/32)			/	
PROD IM	WIDTH : W mm(inch)		840 (33-3/32)			790 (31-7/64)			/	
PROD IM	DEPTH : D mm(inch)		840 (33-3/32)			285 (11-7/32)			/	
PACK IM	HEIGHT : H mm		298			645			/	
PACK IM	WIDTH : W mm		929			921			/	
PACK IM	DEPTH : D mm		929			386			/	
MASS	(NET) kg(lb)		24 (53)			42 (93)			/	
MASS	(GROSS) kg(lb)		30 (67)			46 (101)			/	
LAYERS LIMIT (actually)			11 (12)			4 (5)				
Operation Condition		Cool (DBT)	18°C □ 32°C			-10°C □ 43°C				
Operation Condition		Heat (DBT)	16°C □ 30°C			-15°C □ 24°C				
PIPING	PIPE DIAMETER mm (inch)		(Liquid)□9.52(3/8) (Gas)□15.88(5/8)			(Liquid)□9.52(3/8) (Gas)□15.88(5/8)				
PIPING	CONNECT METHOD, STD LENGTH m (ft)		" ared type, 5.0(16.4)			" ared type, 5.0(16.4)				
PIPING	PIPE LENGTH RANGE m (ft)		5 □ 50 (16.4 □ 164)						□	□
PIPING	I/D&O/D HEIGHT DIFFERENCE m (ft)		15 (OD located lower) / 30 (OD located higher) (49.2/98.4)							
PIPING	ADD GAS AMOUNT g/m (oz/ft)		40 (0.430)							
PIPING	PIPE LENGTH FOR ADDITIONAL GAS m (ft)		20 (65.6)							

*1: In case it is necessary to indicate the air " ow volume in (l/s), the value in (m^3/min.) shall be multiplied by 16.7 and rounded down the decimal point.
*2: If the EUROVENT Certi"ed models can be operated under the •extra-low□temperature condition, -7°C dry bulb and -8°C wet-bulb temperatures with rated voltage 230 V shall be used.
*3: Network Impedance shall be applicable for EUROPE and CHINA models.
*4: The annual consumption is calculated by multiplying the input power at 230 V (400 V) by an average of 500 hours per year in cooling mode.
*5: EER and COP classification is at 230 V (400 V) only in accordance with EU directive 2002/31/EC.
*6: SEER and SCOP classification is at 230V(400V) only in accordance with EN-14825. For heating, SCOP indicates the value of only Average heating season, Other fiche data indicates in an attached sheet.

Single -Type

1-1. Unit Speci□cations

PEY1

1. 4-Way Cassette Type S-100PU1E5A / U-100PEY1E5

INDOOR		MODEL	S-100PU1E5A							
PANEL		MODEL	CZ-KPU21							
OUTDOOR		MODEL				U-100PEY1E5				
Branch pipe		MODEL	-							
PERFORMANCE TEST CONDITION			ISO5151 / EN14511 / EN14825 / EN12102							
POWER SUPPLY		ø, Hz	1ø 50Hz			1ø 50Hz				
		V	220	230	240	220	230	240	Min	Max
COOLING	CAPACITY	kW	10.0	10.0	10.0				2.7	11.5
		BTU/h	34100	34100	34100				9200	39200
	CURRENT	A	0.73	0.71	0.71	15.1	14.4	13.8	-	-
	INPUT POWER	W	95	95	95	3.125k	3.125k	3.125k	-	-
		TOTAL W		-		3.220k	3.220k	3.220k	530	4.200k
	ANNUAL CONSUMPTION	TOTAL kWh ※4		-		-	1610	-	-	-
	EER/EER CLASS	TOTAL(W/W)※5("A"~"G")	-	-	-	3.11	3.11 / B	3.11	5.09	2.74
	Erp ※6 Pdsign	kW	-	-	-	-	10.0	-		
	Erp ※6 SEER	(W/W)	-	-	-	-	6.4	-		
	Erp ※6 Annual consumption	kWh	-	-	-	-	547	-		
	Erp ※6 Class		-	-	-	-	A++	-		
	POWER FACTOR	%	-	-	-	94	94	94	-	-
	NOISE INDOOR (H/M/L)	dB-A		44/38/32			-			
		Power Level dB		62/55/49			-			
	NOISE OUTDOOR (H/L)	dB-A					54/-			
		Power Level dB					70/-			
HEATING	CAPACITY	kW	10.0	10.0	10.0				2.1	13.8
		BTU/h	34100	34100	34100				7200	47100
	CURRENT	A	0.66	0.65	0.64	12.0	11.6	11.2	-	-
	INPUT POWER	W	85	85	85	2.545k	2.545k	2.545k	-	-
		TOTAL W		-		2.630k	2.630k	2.630k	410	4.000k
	COP/COP CLASS	TOTAL(W/W)※5("A"~"G")	-	-	-	3.80	3.80 / A	3.80	5.12	3.45
	Erp ※6 Pdsign	kW	-	-	-	-	10.0	-		
	Erp ※6 Tbivalen	°C	-	-	-	-	-8	-		
	Erp ※6 SCOP	(W/W)	-	-	-	-	4.0	-		
	Erp ※6 Annual consumption	kWh	-	-	-	-	3500	-		
	Erp ※6 Class		-	-	-	-	A+	-		
	POWER FACTOR	%	-	-	-	96	95	95	-	-
	NOISE INDOOR (H/M/L)	dB-A		44/38/32			-		/	/
		Power Level dB		62/55/49			-			
	NOISE OUTDOOR (H/L)	dB-A		-			54/-		/	/
		Power Level dB		-			70/-			
EXTRA LOW TEMP	Total CAPACITY(kW)/INPUT POWER(W)/COP					-				
MAX CURRENT(A)/MAX INPUT POWER(W)			0.73/95	0.71/95	0.71/95	25.0/5.300k	25.0/5.500k	25.0/5.700k	/	
STARTING CURRENT(A)/COMP OUTPUT(W)			-	-	-	15.1/1.7k	14.4/1.7k	13.8/1.7k	/	
NETWORK IMPEDANCE (ΩMAX.)				-			-			
FM OUTPUT (W)				90			90		/	
MOISTURE REMOVAL VOLUME		L/h(Pt/h)	6.0		(12.6)		-			
External static pressure		Pa		-						
I/D AIR FLOW	COOL	m^3/min (ft^3/min)		33/27/21 (1165/953/742)						
	HEAT	m^3/min (ft^3/min)		33/27/21 (1165/953/742)						
O/D AIR FLOW	COOL	m^3/min (ft^3/min)				76		(2684)		
	HEAT	m^3/min (ft^3/min)				67		(2366)		
REFRIGERANT TYPE, AMOUNT g(oz)						R410A	2.60k	(91.7)	/	
PROD	HEIGHT : H mm(inch)			319 (12-9/16)			996 (39-7/32)		/	
	WIDTH : W mm(inch)			840 (33-3/32)			940 (37-1/32)		/	
	DEPTH : D mm(inch)			840 (33-3/32)			340 (13-13/32)		/	
PACK	HEIGHT : H mm			361			1136		/	
	WIDTH : W mm			929			1055		/	
	DEPTH : D mm			929			485		/	
MASS	(NET) kg(lb)			27 (60)			73 (161)		/	
	(GROSS) kg(lb)			34 (75)			81 (179)		/	
LAYERS LIMIT (actually)				11 (12)			2 (3)			
Operation Condition		Cool O.D(DBT)		18°C ~ 32°C			-10°C ~ 43°C			
		Heat O.D(DBT)		16°C ~ 30°C			-15°C ~ 24°C			
PIPING	PIPE DIAMETER mm (inch)		(Liquid)ø9.52(3/8) (Gas)ø15.88(5/8)			(Liquid)ø9.52(3/8) (Gas)ø15.88(5/8)				
	CONNECT METHOD, STD LENGTH m (ft)		flared type, 5.0(16.4)			flared type, 5.0(16.4)				
	PIPE LENGTH RANGE m (ft)		5 ~ 50 (16.4 ~ 164.0)						~	~
	I/D&O/D HEIGHT DIFFERENCE m (ft)		15 (OD located lower) / 30 (OD located higher) (49.2/98.4)							
	ADD GAS AMOUNT g/m (oz/ft)		50 (0.538)							
	PIPE LENGTH FOR ADDITIONAL GAS m (ft)		30 (98.4)							

*1: In case it is necessary to indicate the air □ow volume in (l/s), the value in (m^3/min.) shall be multiplied by 16.7 and rounded down the decimal point.
*2: If the EUROVENT Certi□ed models can be operated under the □extra-low□temperature condition, -7□C dry bulb and -8□C wet-bulb temperatures with rated voltage 230 V shall be used.
*3: Network Impedance shall be applicable for EUROPE and CHINA models.
*4: The annual consumption is calculated by multiplying the input power at 230 V (400 V) by an average of 500 hours per year in cooling mode.
*5: EER and COP classification is at 230 V (400 V) only in accordance with EU directive 2002/31/EC.
*6: SEER and SCOP classification is at 230V(400V) only in accordance with EN-14825. For heating, SCOP indicates the value of only Average heating season, Other fiche data indicates in an attached sheet.

Single -Type

1-1. Unit Speci□cations

PEY1

1. 4-Way Cassette Type S-125PU1E5A / U-125PEY1E5

INDOOR		MODEL	S-125PU1E5A							
PANEL		MODEL	CZ-KPU21							
OUTDOOR		MODEL				U-125PEY1E5				
Branch pipe		MODEL	-							
PERFORMANCE TEST CONDITION			ISO5151 / EN14511 / EN12102							
POWER SUPPLY		ø, Hz	1ø 50Hz			1ø 50Hz				
		V	220	230	240	220	230	240	Min	Max
COOLING	CAPACITY	kW	12.5	12.5	12.5				3.8	13.5
		BTU/h	42700	42700	42700				13000	46100
	CURRENT	A	0.77	0.76	0.73	19.2	18.4	17.6	-	-
	INPUT POWER	W	100	100	100	3.920k	3.920k	3.920k	-	-
		TOTAL W		-		4.020k	4.020k	4.020k	900	5.000k
	ANNUAL CONSUMPTION	TOTAL kWh ※4		-		-	2010	-	-	-
	EER/EER CLASS	TOTAL(W/W)※5("A"~"G")	-	-	-	3.11	3.11 / B	3.11	4.22	2.70
	Erp ※6 Pdsign	kW	-	-	-	-	-	-		
	Erp ※6 SEER	(W/W)	-	-	-	-	-	-		
	Erp ※6 Annual consumption	kWh	-	-	-	-	-	-		
	Erp ※6 Class		-	-	-	-	-	-		
	POWER FACTOR	%	-	-	-	93	93	93	-	-
	NOISE INDOOR (H/M/L)	dB-A		45/39/33			-			
		Power Level dB		63/56/50			-			
	NOISE OUTDOOR (H/L)	dB-A					56/-			
		Power Level dB					73/-			
HEATING	CAPACITY	kW	12.5	12.5	12.5				3.4	15.0
		BTU/h	42700	42700	42700				11600	51200
	CURRENT	A	0.75	0.73	0.73	15.4	14.8	14.2	-	-
	INPUT POWER	W	100	100	100	3.190k	3.190k	3.190k	-	-
		TOTAL W		-		3.290k	3.290k	3.290k	730	4.400k
	COP/COP CLASS	TOTAL(W/W)※5("A"~"G")	-	-	-	3.80	3.80 / A	3.80	4.66	3.41
	Erp ※6 Pdsign	kW	-	-	-	-	-	-		
	Erp ※6 Tbivalen	°C	-	-	-	-	-	-		
	Erp ※6 SCOP	(W/W)	-	-	-	-	-	-		
	Erp ※6 Annual consumption	kWh	-	-	-	-	-	-		
	Erp ※6 Class		-	-	-	-	-	-		
	POWER FACTOR	%	-	-	-	94	94	94	-	-
	NOISE INDOOR (H/M/L)	dB-A		45/39/33			-		/	/
		Power Level dB		63/56/50			-			
	NOISE OUTDOOR (H/L)	dB-A		-			56/-		/	/
		Power Level dB		-			73/-			
EXTRA LOW TEMP	Total CAPACITY(kW)/INPUT POWER(W)/COP					-				
MAX CURRENT(A)/MAX INPUT POWER(W)			0.77/100	0.76/100	0.73/100	29.0/6.000k	29.0/6.300k	29.0/6.600k	/	
STARTING CURRENT(A)/COMP OUTPUT(W)			-	-	-	19.2/3.0k	18.4/3.0k	17.6/3.0k	/	
NETWORK IMPEDANCE (ΩMAX.)				-			-			
FM OUTPUT (W)				90			90		/	
MOISTURE REMOVAL VOLUME		L/h(Pt/h)	7.9		(16.6)		-			
External static pressure		Pa		-						
I/D AIR FLOW	COOL	m^3/min (ft^3/min)		35/28/22 (1236/989/777)						
	HEAT	m^3/min (ft^3/min)		35/28/22 (1236/989/777)						
O/D AIR FLOW	COOL	m^3/min (ft^3/min)				80		(2825)		
	HEAT	m^3/min (ft^3/min)				73		(2578)		
REFRIGERANT TYPE, AMOUNT g(oz)						R410A	3.20k	(112.9)	/	
PROD	HEIGHT : H mm(inch)			319 (12-9/16)			996 (39-7/32)		/	
	WIDTH : W mm(inch)			840 (33-3/32)			940 (37-1/32)		/	
	DEPTH : D mm(inch)			840 (33-3/32)			340 (13-13/32)		/	
PACK	HEIGHT : H mm			361			1136		/	
	WIDTH : W mm			929			1055		/	
	DEPTH : D mm			929			485		/	
MASS	(NET) kg(lb)			27 (60)			85 (187)		/	
	(GROSS) kg(lb)			34 (75)			93 (205)		/	
LAYERS LIMIT (actually)				11 (12)			2 (3)			
Operation Condition		Cool O.D(DBT)		18°C ~ 32°C			-10°C ~ 43°C			
		Heat O.D(DBT)		16°C ~ 30°C			-15°C ~ 24°C			
PIPING	PIPE DIAMETER mm (inch)		(Liquid)ø9.52(3/8) (Gas)ø15.88(5/8)			(Liquid)ø9.52(3/8) (Gas)ø15.88(5/8)				
	CONNECT METHOD, STD LENGTH m (ft)		flared type, 5.0(16.4)			flared type, 5.0(16.4)				
	PIPE LENGTH RANGE m (ft)		5 ~ 50 (16.4 ~ 164.0)						~	~
	I/D&O/D HEIGHT DIFFERENCE m (ft)		15 (OD located lower) / 30 (OD located higher) (49.2/98.4)							
	ADD GAS AMOUNT g/m (oz/ft)		50 (0.538)							
	PIPE LENGTH FOR ADDITIONAL GAS m (ft)		30 (98.4)							

*1: In case it is necessary to indicate the air □ow volume in (l/s), the value in (m^3/min.) shall be multiplied by 16.7 and rounded down the decimal point.
*2: If the EUROVENT Certi□ed models can be operated under the □extra-low□temperature condition, -7□C dry bulb and -8□C wet-bulb temperatures with rated voltage 230 V shall be used.
*3: Network Impedance shall be applicable for EUROPE and CHINA models.
*4: The annual consumption is calculated by multiplying the input power at 230 V (400 V) by an average of 500 hours per year in cooling mode.
*5: EER and COP classification is at 230 V (400 V) only in accordance with EU directive 2002/31/EC.
*6: SEER and SCOP classification is at 230V(400V) only in accordance with EN-14825. For heating, SCOP indicates the value of only Average heating season, Other fiche data indicates in an attached sheet.

Simultaneous (Twin) -Type

1-1. Unit Speci□cations

PEY1

1. 4-Way Cassette Type S-50PU1E5A×2 / U-100PEY1E8

INDOOR		MODEL	S-50PU1E5A×2							
PANEL		MODEL	CZ-KPU21×2							
OUTDOOR		MODEL	U-100PEY1E8							
Branch pipe		MODEL	CZ-P155BK1							
PERFORMANCE TEST CONDITION			ISO5151 / EN14511 / EN14825 / EN12102							
POWER SUPPLY		ø, Hz	1ø 50Hz			3ø 50Hz				
		V	220	230	240	380	400	415	Min	Max
COOLING	CAPACITY	kW	10.0	10.0	10.0				2.7	11.5
		BTU/h	34100	34100	34100				9200	39200
	CURRENT	A	0.22×2	0.22×2	0.21×2	5.20	4.90	4.75	-	-
	INPUT POWER	W	25×2	25×2	25×2	3.170k	3.170k	3.170k	-	-
		TOTAL W	-			3.220k	3.220k	3.220k	530	4.200k
	ANNUAL CONSUMPTION	TOTAL kWh ※4	-			-	1610	-	-	-
	EER/EER CLASS	TOTAL(W/W)※5("A"~"G")	-	-	-	3.11	3.11 / B	3.11	5.09	2.74
	Erp ※6 Pdsign	kW	-	-	-	-	10.0	-		
	Erp ※6 SEER	(W/W)	-	-	-	-	6.2	-		
	Erp ※6 Annual consumption	kWh	-	-	-	-	564	-		
	Erp ※6 Class		-	-	-	-	A++	-		
	POWER FACTOR	%	-	-	-	93	93	93	-	-
	NOISE INDOOR (H/M/L)	dB-A	32/29/27				-			
		Power Level dB	49/46/44				-			
	NOISE OUTDOOR (H/L)	dB-A					54/-			
		Power Level dB					70/-			
HEATING	CAPACITY	kW	10.0	10.0	10.0				2.1	13.8
		BTU/h	34100	34100	34100				7200	47100
	CURRENT	A	0.20×2	0.20×2	0.19×2	4.20	4.00	3.85	-	-
	INPUT POWER	W	25×2	25×2	25×2	2.580k	2.580k	2.580k	-	-
		TOTAL W	-			2.630k	2.630k	2.630k	410	4.000k
	COP/COP CLASS	TOTAL(W/W)※5("A"~"G")	-	-	-	3.80	3.80 / A	3.80	5.12	3.45
	Erp ※6 Pdsign	kW	-	-	-	-	10.0	-		
	Erp ※6 Tbivalen	°C	-	-	-	-	-8	-		
	Erp ※6 SCOP	(W/W)	-	-	-	-	4.0	-		
	Erp ※6 Annual consumption	kWh	-	-	-	-	3500	-		
	Erp ※6 Class		-	-	-	-	A+	-		
	POWER FACTOR	%	-	-	-	93	93	93	-	-
	NOISE INDOOR (H/M/L)	dB-A	32/29/27				-		/	/
		Power Level dB	49/46/44				-			
	NOISE OUTDOOR (H/L)	dB-A	-				54/-		/	/
		Power Level dB	-				70/-			
EXTRA LOW TEMP	Total CAPACITY(kW)/INPUT POWER(W)/COP		-							
MAX CURRENT(A)/MAX INPUT POWER(W)			0.22×2/25×2	0.22×2/25×2	0.21×2/25×2	9.0/5.550k	9.0/5.800k	9.0/6.050k	/	
STARTING CURRENT(A)/COMP OUTPUT(W)			-	-	-	5.20/1.7k	4.90/1.7k	4.75/1.7k	/	
NETWORK IMPEDANCE (ΩMAX.)			-				-			
FM OUTPUT (W)			60×2				90		/	
MOISTURE REMOVAL VOLUME		L/h(Pt/h)	6.0	(3.0×2)	(12.6)		-			
External static pressure		Pa	-							
I/D AIR FLOW	COOL	m³/min (ft³/min)	[16/13.5/12 (565/477/424)]×2							
	HEAT	m³/min (ft³/min)	[16/13.5/12 (565/477/424)]×2							
O/D AIR FLOW	COOL	m³/min (ft³/min)				76		(2684)		
	HEAT	m³/min (ft³/min)				67		(2366)		
REFRIGERANT TYPE, AMOUNT g(oz)						R410A	2.60k	(91.7)	/	
PROD IM	HEIGHT : H mm(inch)		256 (10-3/32)				996 (39-7/32)		/	
	WIDTH : W mm(inch)		840 (33-3/32)				940 (37-1/32)		/	
	DEPTH : D mm(inch)		840 (33-3/32)				340 (13-13/32)		/	
PACK IM	HEIGHT : H mm		298				1136		/	
	WIDTH : W mm		929				1055		/	
	DEPTH : D mm		929				485		/	
MASS	(NET) kg(lb)		23 (51)				73 (161)		/	
	(GROSS) kg(lb)		29 (64)				81 (179)		/	
LAYERS LIMIT (actually)			11 (12)				2 (3)			
Operation Condition		Cool O.D(DBT)	18°C ~ 32°C				-10°C ~ 43°C			
		Heat O.D(DBT)	16°C ~ 30°C				-15°C ~ 24°C			
PIPING	PIPE DIAMETER mm (inch)		(Liquid)ø6.35(1/4) (Gas)ø12.7(1/2)			(Liquid)ø9.52(3/8) (Gas)ø15.88(5/8)				
	CONNECT METHOD, STD LENGTH m (ft)		flared type, 5.0(16.4)			flared type, 5.0(16.4)				
	PIPE LENGTH RANGE m (ft)		5 ~ 50 (16.4 ~ 164.0)						~	~
	I/D&O/D HEIGHT DIFFERENCE m (ft)		15 (OD located lower) / 30 (OD located higher) (49.2/98.4)							
	ADD GAS AMOUNT g/m (oz/ft)		50 (0.538)							
	PIPE LENGTH FOR ADDITIONAL GAS m (ft)		30 (98.4)							

*1: In case it is necessary to indicate the air □ow volume in (l/s), the value in (m³/min.) shall be multiplied by 16.7 and rounded down the decimal point.
*2: If the EUROVENT Certi□ed models can be operated under the □extra-low□temperature condition, -7□C dry bulb and -8□C wet-bulb temperatures with rated voltage 230 V shall be used.
*3: Network Impedance shall be applicable for EUROPE and CHINA models.
*4: The annual consumption is calculated by multiplying the input power at 230 V (400 V) by an average of 500 hours per year in cooling mode.
*5: EER and COP classification is at 230 V (400 V) only in accordance with EU directive 2002/31/EC.
*6: SEER and SCOP classification is at 230V(400V) only in accordance with EN-14825. For heating, SCOP indicates the value of only Average heating season, Other fiche data indicates in an attached sheet.

Simultaneous (Twin) -Type

1-1. Unit Speci□cations

PEY1

1. 4-Way Cassette Type S-60PU1E5A×2 / U-125PEY1E8

INDOOR		MODEL	S-60PU1E5A×2							
PANEL		MODEL	CZ-KPU21×2							
OUTDOOR		MODEL				U-125PEY1E8				
Branch pipe		MODEL	CZ-P155BK1							
PERFORMANCE TEST CONDITION			ISO5151 / EN14511 / EN12102							
POWER SUPPLY		ø, Hz	1ø 50Hz			3ø 50Hz				
		V	220	230	240	380	400	415	Min	Max
COOLING	CAPACITY	kW	12.5	12.5	12.5				3.8	13.5
		BTU/h	42700	42700	42700				13000	46100
	CURRENT	A	0.32×2	0.31×2	0.30×2	6.40	6.05	5.85	-	-
	INPUT POWER	W	35×2	35×2	35×2	3.950k	3.950k	3.950k	-	-
		TOTAL W		-		4.020k	4.020k	4.020k	900	5.000k
	ANNUAL CONSUMPTION	TOTAL kWh ※4		-		-	2010	-	-	-
	EER/EER CLASS	TOTAL(W/W)※5("A"~"G")	-	-	-	3.11	3.11 / B	3.11	4.22	2.70
	Erp ※6 Pdsign	kW	-	-	-	-	-	-		
	Erp ※6 SEER	(W/W)	-	-	-	-	-	-		
	Erp ※6 Annual consumption	kWh	-	-	-	-	-	-		
	Erp ※6 Class		-	-	-	-	-	-		
	POWER FACTOR	%	-	-	-	94	94	94	-	-
	NOISE INDOOR (H/M/L)	dB-A		36/31/28			-			
		Power Level dB		53/48/45			-			
	NOISE OUTDOOR (H/L)	dB-A					56/-			
		Power Level dB					73/-			
HEATING	CAPACITY	kW	12.5	12.5	12.5				3.4	15.0
		BTU/h	42700	42700	42700				11600	51200
	CURRENT	A	0.30×2	0.30×2	0.29×2	5.20	4.95	4.75	-	-
	INPUT POWER	W	35×2	35×2	35×2	3.220k	3.220k	3.220k	-	-
		TOTAL W		-		3.290k	3.290k	3.290k	730	4.400k
	COP/COP CLASS	TOTAL(W/W)※5("A"~"G")	-	-	-	3.80	3.80 / A	3.80	4.66	3.41
	Erp ※6 Pdsign	kW	-	-	-	-	-	-		
	Erp ※6 Tbivalen	°C	-	-	-	-	-	-		
	Erp ※6 SCOP	(W/W)	-	-	-	-	-	-		
	Erp ※6 Annual consumption	kWh	-	-	-	-	-	-		
	Erp ※6 Class		-	-	-	-	-	-		
	POWER FACTOR	%	-	-	-	94	94	94	-	-
	NOISE INDOOR (H/M/L)	dB-A		36/31/28			-		/	/
		Power Level dB		53/48/45			-			
	NOISE OUTDOOR (H/L)	dB-A		-			56/-		/	/
		Power Level dB		-			73/-			
EXTRA LOW TEMP	Total CAPACITY(kW)/INPUT POWER(W)/COP					-				
MAX CURRENT(A)/MAX INPUT POWER(W)			0.32×2/35×2	0.31×2/35×2	0.30×2/35×2	10.0/6.200k	10.0/6.500k	10.0/6.750k	/	
STARTING CURRENT(A)/COMP OUTPUT(W)			-	-	-	6.40/3.0k	6.05/3.0k	5.85/3.0k	/	
NETWORK IMPEDANCE (ΩMAX.)				-			-			
FM OUTPUT (W)				60×2			90		/	
MOISTURE REMOVAL VOLUME		L/h(Pt/h)	7.9	(3.95×2)	(16.6)		-			
External static pressure		Pa		-						
I/D AIR FLOW	COOL	m^3/min (ft^3/min)		[21/17/14 (742/600/494)]×2						
	HEAT	m^3/min (ft^3/min)		[21/17/14 (742/600/494)]×2						
O/D AIR FLOW	COOL	m^3/min (ft^3/min)				80		(2825)		
	HEAT	m^3/min (ft^3/min)				73		(2578)		
REFRIGERANT TYPE, AMOUNT g(oz)						R410A	3.20k	(112.9)	/	
PROD IM	HEIGHT : H mm(inch)			256 (10-3/32)			996 (39-7/32)		/	
	WIDTH : W mm(inch)			840 (33-3/32)			940 (37-1/32)		/	
	DEPTH : D mm(inch)			840 (33-3/32)			340 (13-13/32)		/	
PACK IM	HEIGHT : H mm			298			1136		/	
	WIDTH : W mm			929			1055		/	
	DEPTH : D mm			929			485		/	
MASS	(NET) kg(lb)			24 (53)			85 (187)		/	
	(GROSS) kg(lb)			30 (67)			93 (205)		/	
LAYERS LIMIT (actually)				11 (12)			2 (3)			
Operation Condition		Cool O.D(DBT)		18°C ~ 32°C			-10°C ~ 43°C			
		Heat O.D(DBT)		16°C ~ 30°C			-15°C ~ 24°C			
PIPING	PIPE DIAMETER mm (inch)		(Liquid)ø9.52(3/8) (Gas)ø15.88(5/8)			(Liquid)ø9.52(3/8) (Gas)ø15.88(5/8)				
	CONNECT METHOD, STD LENGTH m (ft)		flared type, 5.0(16.4)			flared type, 5.0(16.4)				
	PIPE LENGTH RANGE m (ft)		5 ~ 50 (16.4 ~ 164.0)						~	~
	I/D&O/D HEIGHT DIFFERENCE m (ft)		15 (OD located lower) / 30 (OD located higher) (49.2/98.4)							
	ADD GAS AMOUNT g/m (oz/ft)		50 (0.538)							
	PIPE LENGTH FOR ADDITIONAL GAS m (ft)		30 (98.4)							

*1: In case it is necessary to indicate the air □ow volume in (l/s), the value in (m^3/min.) shall be multiplied by 16.7 and rounded down the decimal point.
*2: If the EUROVENT Certi□ed models can be operated under the □extra-low□temperature condition, -7□C dry bulb and -8□C wet-bulb temperatures with rated voltage 230 V shall be used.
*3: Network Impedance shall be applicable for EUROPE and CHINA models.
*4: The annual consumption is calculated by multiplying the input power at 230 V (400 V) by an average of 500 hours per year in cooling mode.
*5: EER and COP classification is at 230 V (400 V) only in accordance with EU directive 2002/31/EC.
*6: SEER and SCOP classification is at 230V(400V) only in accordance with EN-14825. For heating, SCOP indicates the value of only Average heating season, Other fiche data indicates in an attached sheet.

Simultaneous (Twin) -Type

1-1. Unit Specifications

PEY1

1. 4-Way Cassette Type S-71PU1E5A×2 / U-140PEY1E8

INDOOR		MODEL	S-71PU1E5A×2							
PANEL		MODEL	CZ-KPU21×2							
OUTDOOR		MODEL				U-140PEY1E8				
Branch pipe		MODEL	CZ-P155BK1							
PERFORMANCE TEST CONDITION			ISO5151 / EN14511 / EN12102							
POWER SUPPLY		ø, Hz	1ø 50Hz			3ø 50Hz				
		V	220	230	240	380	400	415	Min	Max
COOLING	CAPACITY	kW	14.0	14.0	14.0				3.3	15.5
		BTU/h	47800	47800	47800				11300	52900
	CURRENT	A	0.36×2	0.33×2	0.32×2	6.90	6.55	6.35	-	-
	INPUT POWER	W	40×2	40×2	40×2	4.280k	4.280k	4.280k	-	-
		TOTAL W		-		4.360k	4.360k	4.360k	840	6.000k
	ANNUAL CONSUMPTION	TOTAL kWh ※4		-		-	2180	-	-	-
	EER/EER CLASS	TOTAL(W/W)※5("A"~"G")	-	-	-	3.21	3.21 / A	3.21	3.93	2.58
	Erp ※6 Pdsign	kW	-	-	-	-	-	-		
	Erp ※6 SEER	(W/W)	-	-	-	-	-	-		
	Erp ※6 Annual consumption	kWh	-	-	-	-	-	-		
	Erp ※6 Class		-	-	-	-	-	-		
	POWER FACTOR	%	-	-	-	94	94	94	-	-
	NOISE INDOOR (H/M/L)	dB-A		37/31/28			-			
		Power Level dB		54/48/45			-			
	NOISE OUTDOOR (H/L)	dB-A					54/-			
		Power Level dB					71/-			
HEATING	CAPACITY	kW	14.0	14.0	14.0				4.1	16.0
		BTU/h	47800	47800	47800				14000	54600
	CURRENT	A	0.35×2	0.32×2	0.31×2	5.70	5.40	5.20	-	-
	INPUT POWER	W	40×2	40×2	40×2	3.520k	3.520k	3.520k	-	-
		TOTAL W		-		3.600k	3.600k	3.600k	900	5.200k
	COP/COP CLASS	TOTAL(W/W)※5("A"~"G")	-	-	-	3.89	3.89 / A	3.89	4.56	3.08
	Erp ※6 Pdsign	kW	-	-	-	-	-	-		
	Erp ※6 Tbivalen	°C	-	-	-	-	-	-		
	Erp ※6 SCOP	(W/W)	-	-	-	-	-	-		
	Erp ※6 Annual consumption	kWh	-	-	-	-	-	-		
	Erp ※6 Class		-	-	-	-	-	-		
	POWER FACTOR	%	-	-	-	94	94	94	-	-
	NOISE INDOOR (H/M/L)	dB-A		37/31/28			-		/	/
		Power Level dB		54/48/45			-			
	NOISE OUTDOOR (H/L)	dB-A		-			53/-		/	/
		Power Level dB		-			70/-			
EXTRA LOW TEMP	Total CAPACITY(kW)/INPUT POWER(W)/COP					-				
MAX CURRENT(A)/MAX INPUT POWER(W)			0.36×2/40×2	0.33×2/40×2	0.32×2/40×2	10.0/6.200k	10.0/6.500k	10.0/6.750k	/	
STARTING CURRENT(A)/COMP OUTPUT(W)			-	-	-	6.90/3.0k	6.55/3.0k	6.35/3.0k	/	
NETWORK IMPEDANCE (ΩMAX.)				-			-			
FM OUTPUT (W)				60			90×2		/	
MOISTURE REMOVAL VOLUME		L/h(Pt/h)	9.0	(4.5×2)	(18.9)		-			
External static pressure		Pa		-						
I/D AIR FLOW	COOL	m^3/min (ft^3/min)		[22/17/14 (777/600/494)]×2						
	HEAT	m^3/min (ft^3/min)		[22/17/14 (777/600/494)]×2						
O/D AIR FLOW	COOL	m^3/min (ft^3/min)				135		(4767)		
	HEAT	m^3/min (ft^3/min)				120		(4238)		
REFRIGERANT TYPE, AMOUNT g(oz)						R410A	3.40k	(119.9)	/	
PROD IM	HEIGHT : H mm(inch)			256 (10-3/32)			1416 (55-3/4)		/	
	WIDTH : W mm(inch)			840 (33-3/32)			940 (37-1/32)		/	
	DEPTH : D mm(inch)			840 (33-3/32)			340 (13-13/32)		/	
PACK IM	HEIGHT : H mm			298			1556		/	
	WIDTH : W mm			929			1055		/	
	DEPTH : D mm			929			485		/	
MASS	(NET) kg(lb)			24 (53)			98 (216)		/	
	(GROSS) kg(lb)			30 (67)			108 (238)		/	
LAYERS LIMIT (actually)				11 (12)			1 (2)			
Operation Condition		Cool O.D(DBT)		18°C ~ 32°C			-10°C ~ 43°C			
		Heat O.D(DBT)		16°C ~ 30°C			-15°C ~ 24°C			
PIPING	PIPE DIAMETER mm (inch)		(Liquid)ø9.52(3/8) (Gas)ø15.88(5/8)			(Liquid)ø9.52(3/8) (Gas)ø15.88(5/8)				
	CONNECT METHOD, STD LENGTH m (ft)		flared type, 5.0(16.4)			flared type, 5.0(16.4)				
	PIPE LENGTH RANGE m (ft)		5 ~ 50 (16.4 ~ 164.0)						~	~
	I/D&O/D HEIGHT DIFFERENCE m (ft)		15 (OD located lower) / 30 (OD located higher) (49.2/98.4)							
	ADD GAS AMOUNT g/m (oz/ft)		50 (0.538)							
	PIPE LENGTH FOR ADDITIONAL GAS m (ft)		30 (98.4)							

*1: In case it is necessary to indicate the air □ow volume in (l/s), the value in (m^3/min.) shall be multiplied by 16.7 and rounded down the decimal point.
*2: If the EUROVENT Certi□ed models can be operated under the □extra-low□temperature condition, -7□C dry bulb and -8□C wet-bulb temperatures with rated voltage 230 V shall be used.
*3: Network Impedance shall be applicable for EUROPE and CHINA models.
*4: The annual consumption is calculated by multiplying the input power at 230 V (400 V) by an average of 500 hours per year in cooling mode.
*5: EER and COP classification is at 230 V (400 V) only in accordance with EU directive 2002/31/EC.
*6: SEER and SCOP classification is at 230V(400V) only in accordance with EN-14825. For heating, SCOP indicates the value of only Average heating season, Other fiche data indicates in an attached sheet.

Single -Type

1-1. Unit Speci□cations

PEY1

1. 4-Way Cassette Type S-100PU1E5A / U-100PEY1E8

INDOOR		MODEL	S-100PU1E5A							
PANEL		MODEL	CZ-KPU21							
OUTDOOR		MODEL				U-100PEY1E8				
Branch pipe		MODEL	-							
PERFORMANCE TEST CONDITION			ISO5151 / EN14511 / EN14825 / EN12102							
POWER SUPPLY		ø, Hz	1ø 50Hz			3ø 50Hz				
		V	220	230	240	380	400	415	Min	Max
COOLING	CAPACITY	kW	10.0	10.0	10.0				2.7	11.5
		BTU/h	34100	34100	34100				9200	39200
	CURRENT	A	0.73	0.71	0.71	5.10	4.85	4.70	-	-
	INPUT POWER	W	95	95	95	3.125k	3.125k	3.125k	-	-
		TOTAL W		-		3.220k	3.220k	3.220k	530	4.200k
	ANNUAL CONSUMPTION	TOTAL kWh ※4		-		-	1610	-	-	-
	EER/EER CLASS	TOTAL(W/W)※5("A"~"G")	-	-	-	3.11	3.11 / B	3.11	5.09	2.74
	Erp ※6 Pdsign	kW	-	-	-	-	10.0	-		
	Erp ※6 SEER	(W/W)	-	-	-	-	6.2	-		
	Erp ※6 Annual consumption	kWh	-	-	-	-	564	-		
	Erp ※6 Class		-	-	-	-	A++	-		
	POWER FACTOR	%	-	-	-	93	93	93	-	-
	NOISE INDOOR (H/M/L)	dB-A		44/38/32			-			
		Power Level dB		62/55/49			-			
	NOISE OUTDOOR (H/L)	dB-A					54/-			
		Power Level dB					70/-			
HEATING	CAPACITY	kW	10.0	10.0	10.0				2.1	13.8
		BTU/h	34100	34100	34100				7200	47100
	CURRENT	A	0.66	0.65	0.64	4.15	3.95	3.80	-	-
	INPUT POWER	W	85	85	85	2.545k	2.545k	2.545k	-	-
		TOTAL W		-		2.630k	2.630k	2.630k	410	4.000k
	COP/COP CLASS	TOTAL(W/W)※5("A"~"G")	-	-	-	3.80	3.80 / A	3.80	5.12	3.45
	Erp ※6 Pdsign	kW	-	-	-	-	10.0	-		
	Erp ※6 Tbivalen	°C	-	-	-	-	-8	-		
	Erp ※6 SCOP	(W/W)	-	-	-	-	4.0	-		
	Erp ※6 Annual consumption	kWh	-	-	-	-	3500	-		
	Erp ※6 Class		-	-	-	-	A+	-		
	POWER FACTOR	%	-	-	-	93	93	93	-	-
	NOISE INDOOR (H/M/L)	dB-A		44/38/32			-		/	/
		Power Level dB		62/55/49			-			
	NOISE OUTDOOR (H/L)	dB-A		-			54/-		/	/
		Power Level dB		-			70/-			
EXTRA LOW TEMP	Total CAPACITY(kW)/INPUT POWER(W)/COP					-				
MAX CURRENT(A)/MAX INPUT POWER(W)			0.73/95	0.71/95	0.71/95	9.0/5.550k	9.0/5.800k	9.0/6.050k	/	
STARTING CURRENT(A)/COMP OUTPUT(W)			-	-	-	5.10/1.7k	4.85/1.7k	4.70/1.7k	/	
NETWORK IMPEDANCE (ΩMAX.)				-			-			
FM OUTPUT (W)				90			90		/	
MOISTURE REMOVAL VOLUME		L/h(Pt/h)	6.0		(12.6)		-			
External static pressure		Pa		-						
I/D AIR FLOW	COOL	m^3/min (ft^3/min)		33/27/21 (1165/953/742)						
	HEAT	m^3/min (ft^3/min)		33/27/21 (1165/953/742)						
O/D AIR FLOW	COOL	m^3/min (ft^3/min)				76		(2684)		
	HEAT	m^3/min (ft^3/min)				67		(2366)		
REFRIGERANT TYPE, AMOUNT g(oz)						R410A	2.60k	(91.7)	/	
PROD	HEIGHT : H mm(inch)			319 (12-9/16)			996 (39-7/32)		/	
	WIDTH : W mm(inch)			840 (33-3/32)			940 (37-1/32)		/	
	DEPTH : D mm(inch)			840 (33-3/32)			340 (13-13/32)		/	
PACK	HEIGHT : H mm			361			1136		/	
	WIDTH : W mm			929			1055		/	
	DEPTH : D mm			929			485		/	
MASS	(NET) kg(lb)			27 (60)			73 (161)		/	
	(GROSS) kg(lb)			34 (75)			81 (179)		/	
LAYERS LIMIT (actually)				11 (12)			2 (3)			
Operation Condition		Cool O.D(DBT)		18°C ~ 32°C			-10°C ~ 43°C			
		Heat O.D(DBT)		16°C ~ 30°C			-15°C ~ 24°C			
PIPING	PIPE DIAMETER mm (inch)		(Liquid)ø9.52(3/8) (Gas)ø15.88(5/8)			(Liquid)ø9.52(3/8) (Gas)ø15.88(5/8)				
	CONNECT METHOD, STD LENGTH m (ft)		flared type, 5.0(16.4)			flared type, 5.0(16.4)				
	PIPE LENGTH RANGE m (ft)		5 ~ 50 (16.4 ~ 164.0)						~	~
	I/D&O/D HEIGHT DIFFERENCE m (ft)		15 (OD located lower) / 30 (OD located higher) (49.2/98.4)							
	ADD GAS AMOUNT g/m (oz/ft)		50 (0.538)							
	PIPE LENGTH FOR ADDITIONAL GAS m (ft)		30 (98.4)							

*1: In case it is necessary to indicate the air □ow volume in (l/s), the value in (m^3/min.) shall be multiplied by 16.7 and rounded down the decimal point.
*2: If the EUROVENT Certi□ed models can be operated under the □extra-low□temperature condition, -7□C dry bulb and -8□C wet-bulb temperatures with rated voltage 230 V shall be used.
*3: Network Impedance shall be applicable for EUROPE and CHINA models.
*4: The annual consumption is calculated by multiplying the input power at 230 V (400 V) by an average of 500 hours per year in cooling mode.
*5: EER and COP classification is at 230 V (400 V) only in accordance with EU directive 2002/31/EC.
*6: SEER and SCOP classification is at 230V(400V) only in accordance with EN-14825. For heating, SCOP indicates the value of only Average heating season, Other fiche data indicates in an attached sheet.

Single -Type

1-1. Unit Specifications

PEY1

1. 4-Way Cassette Type S-125PU1E5A / U-125PEY1E8

INDOOR		MODEL	S-125PU1E5A							
PANEL		MODEL	CZ-KPU21							
OUTDOOR		MODEL				U-125PEY1E8				
Branch pipe		MODEL	-							
PERFORMANCE TEST CONDITION			ISO5151 / EN14511 / EN12102							
POWER SUPPLY		ø, Hz	1ø 50Hz			3ø 50Hz				
		V	220	230	240	380	400	415	Min	Max
COOLING	CAPACITY	kW	12.5	12.5	12.5				3.8	13.5
		BTU/h	42700	42700	42700				13000	46100
	CURRENT	A	0.77	0.76	0.73	6.35	6.05	5.80	-	-
	INPUT POWER	W	100	100	100	3.920k	3.920k	3.920k	-	-
		TOTAL W		-		4.020k	4.020k	4.020k	900	5.000k
	ANNUAL CONSUMPTION	TOTAL kWh ※4		-		-	2010	-	-	-
	EER/EER CLASS	TOTAL(W/W)※5("A"~"G")	-	-	-	3.11	3.11 / B	3.11	4.22	2.70
	Erp ※6 Pdsign	kW	-	-	-	-	-	-		
	Erp ※6 SEER	(W/W)	-	-	-	-	-	-		
	Erp ※6 Annual consumption	kWh	-	-	-	-	-	-		
	Erp ※6 Class		-	-	-	-	-	-		
	POWER FACTOR	%	-	-	-	94	94	94	-	-
	NOISE INDOOR (H/M/L)	dB-A		45/39/33			-			
		Power Level dB		63/56/50			-			
	NOISE OUTDOOR (H/L)	dB-A					56/-			
		Power Level dB					73/-			
HEATING	CAPACITY	kW	12.5	12.5	12.5				3.4	15.0
		BTU/h	42700	42700	42700				11600	51200
	CURRENT	A	0.75	0.73	0.73	5.15	4.90	4.70	-	-
	INPUT POWER	W	100	100	100	3.190k	3.190k	3.190k	-	-
		TOTAL W		-		3.290k	3.290k	3.290k	730	4.400k
	COP/COP CLASS	TOTAL(W/W)※5("A"~"G")	-	-	-	3.80	3.80 / A	3.80	4.66	3.41
	Erp ※6 Pdsign	kW	-	-	-	-	-	-		
	Erp ※6 Tbivalen	°C	-	-	-	-	-	-		
	Erp ※6 SCOP	(W/W)	-	-	-	-	-	-		
	Erp ※6 Annual consumption	kWh	-	-	-	-	-	-		
	Erp ※6 Class		-	-	-	-	-	-		
	POWER FACTOR	%	-	-	-	94	94	94	-	-
	NOISE INDOOR (H/M/L)	dB-A		45/39/33			-		/	/
		Power Level dB		63/56/50			-			
	NOISE OUTDOOR (H/L)	dB-A		-			56/-		/	/
		Power Level dB		-			73/-			
EXTRA LOW TEMP	Total CAPACITY(kW)/INPUT POWER(W)/COP					-				
MAX CURRENT(A)/MAX INPUT POWER(W)			0.77/100	0.76/100	0.73/100	10.0/6.200k	10.0/6.500k	10.0/6.750k	/	
STARTING CURRENT(A)/COMP OUTPUT(W)			-	-	-	6.35/3.0k	6.05/3.0k	5.80/3.0k	/	
NETWORK IMPEDANCE (ΩMAX.)				-			-			
FM OUTPUT (W)				90			90		/	
MOISTURE REMOVAL VOLUME		L/h(Pt/h)	7.9		(16.6)		-			
External static pressure		Pa		-						
I/D AIR FLOW	COOL	m^3/min (ft^3/min)		35/28/22 (1236/989/777)						
	HEAT	m^3/min (ft^3/min)		35/28/22 (1236/989/777)						
O/D AIR FLOW	COOL	m^3/min (ft^3/min)				80		(2825)		
	HEAT	m^3/min (ft^3/min)				73		(2578)		
REFRIGERANT TYPE, AMOUNT g(oz)						R410A	3.20k	(112.9)	/	
PROD	HEIGHT : H mm(inch)			319 (12-9/16)			996 (39-7/32)		/	
	WIDTH : W mm(inch)			840 (33-3/32)			940 (37-1/32)		/	
	DEPTH : D mm(inch)			840 (33-3/32)			340 (13-13/32)		/	
PACK	HEIGHT : H mm			361			1136		/	
	WIDTH : W mm			929			1055		/	
	DEPTH : D mm			929			485		/	
MASS	(NET) kg(lb)			27 (60)			85 (187)		/	
	(GROSS) kg(lb)			34 (75)			93 (205)		/	
LAYERS LIMIT (actually)				11 (12)			2 (3)			
Operation Condition		Cool O.D(DBT)		18°C ~ 32°C			-10°C ~ 43°C			
		Heat O.D(DBT)		16°C ~ 30°C			-15°C ~ 24°C			
PIPING	PIPE DIAMETER mm (inch)		(Liquid)ø9.52(3/8) (Gas)ø15.88(5/8)			(Liquid)ø9.52(3/8) (Gas)ø15.88(5/8)				
	CONNECT METHOD, STD LENGTH m (ft)		flared type, 5.0(16.4)			flared type, 5.0(16.4)				
	PIPE LENGTH RANGE m (ft)		5 ~ 50 (16.4 ~ 164.0)						~	~
	I/D&O/D HEIGHT DIFFERENCE m (ft)		15 (OD located lower) / 30 (OD located higher) (49.2/98.4)							
	ADD GAS AMOUNT g/m (oz/ft)		50 (0.538)							
	PIPE LENGTH FOR ADDITIONAL GAS m (ft)		30 (98.4)							

*1: In case it is necessary to indicate the air flow volume in (l/s), the value in (m^3/min.) shall be multiplied by 16.7 and rounded down the decimal point.
*2: If the EUROVENT Certified models can be operated under the extra-low temperature condition, -7°C dry bulb and -8°C wet-bulb temperatures with rated voltage 230 V shall be used.
*3: Network Impedance shall be applicable for EUROPE and CHINA models.
*4: The annual consumption is calculated by multiplying the input power at 230 V (400 V) by an average of 500 hours per year in cooling mode.
*5: EER and COP classification is at 230 V (400 V) only in accordance with EU directive 2002/31/EC.
*6: SEER and SCOP classification is at 230V(400V) only in accordance with EN-14825. For heating, SCOP indicates the value of only Average heating season, Other fiche data indicates in an attached sheet.

Single -Type

1-1. Unit Speci□cations

PEY1

1. 4-Way Cassette Type S-140PU1E5A / U-140PEY1E8

INDOOR		MODEL	S-140PU1E5A							
PANEL		MODEL	CZ-KPU21							
OUTDOOR		MODEL				U-140PEY1E8				
Branch pipe		MODEL	-							
PERFORMANCE TEST CONDITION			ISO5151 / EN14511 / EN12102							
POWER SUPPLY		ø, Hz	1ø 50Hz			3ø 50Hz				
		V	220	230	240	380	400	415	Min	Max
COOLING	CAPACITY	kW	14.0	14.0	14.0				3.3	15.5
		BTU/h	47800	47800	47800				11300	52900
	CURRENT	A	0.90	0.89	0.87	6.85	6.50	6.25	-	-
	INPUT POWER	W	115	115	115	4.245k	4.245k	4.245k	-	-
		TOTAL W	-			4.360k	4.360k	4.360k	840	6.000k
	ANNUAL CONSUMPTION	TOTAL kWh ※4	-			-	2180	-	-	-
	EER/EER CLASS	TOTAL(W/W)※5(("A"~"G")	-	-	-	3.21	3.21 / A	3.21	3.93	2.58
	Erp ※6 Pdsign	kW	-	-	-	-	-	-		
	Erp ※6 SEER	(W/W)	-	-	-	-	-	-		
	Erp ※6 Annual consumption	kWh	-	-	-	-	-	-		
	Erp ※6 Class		-	-	-	-	-	-		
	POWER FACTOR	%	-	-	-	94	94	94	-	-
	NOISE INDOOR (H/M/L)	dB-A	46/40/34			-				
		Power Level dB	64/57/51			-				
	NOISE OUTDOOR (H/L)	dB-A				54/-				
		Power Level dB				71/-				
HEATING	CAPACITY	kW	14.0	14.0	14.0				4.1	16.0
		BTU/h	47800	47800	47800				14000	54600
	CURRENT	A	0.83	0.80	0.79	5.65	5.35	5.20	-	-
	INPUT POWER	W	105	105	105	3.495k	3.495k	3.495k	-	-
		TOTAL W	-			3.600k	3.600k	3.600k	900	5.200k
	COP/COP CLASS	TOTAL(W/W)※5(("A"~"G")	-	-	-	3.89	3.89 / A	3.89	4.56	3.08
	Erp ※6 Pdsign	kW	-	-	-	-	-	-		
	Erp ※6 Tbivalen	°C	-	-	-	-	-	-		
	Erp ※6 SCOP	(W/W)	-	-	-	-	-	-		
	Erp ※6 Annual consumption	kWh	-	-	-	-	-	-		
	Erp ※6 Class		-	-	-	-	-	-		
	POWER FACTOR	%	-	-	-	94	94	94	-	-
	NOISE INDOOR (H/M/L)	dB-A	46/40/34			-			/	/
		Power Level dB	64/57/51			-				
	NOISE OUTDOOR (H/L)	dB-A	-			53/-			/	/
		Power Level dB	-			70/-				
EXTRA LOW TEMP	Total CAPACITY(kW)/INPUT POWER(W)/COP		-							
MAX CURRENT(A)/MAX INPUT POWER(W)			0.90/115	0.89/115	0.87/115	10.0/6.200k	10.0/6.500k	10.0/6.750k	/	
STARTING CURRENT(A)/COMP OUTPUT(W)			-	-	-	6.85/3.0k	6.50/3.0k	6.25/3.0k	/	
NETWORK IMPEDANCE (ΩMAX.)			-			-				
FM OUTPUT (W)			90			90×2			/	
MOISTURE REMOVAL VOLUME		L/h(Pt/h)	9.0		(18.9)	-				
External static pressure		Pa	-							
I/D AIR FLOW	COOL	m^3/min (ft^3/min)	36/29/23 (1271/1024/812)							
	HEAT	m^3/min (ft^3/min)	36/29/23 (1271/1024/812)							
O/D AIR FLOW	COOL	m^3/min (ft^3/min)				135		(4767)		
	HEAT	m^3/min (ft^3/min)				120		(4238)		
REFRIGERANT TYPE, AMOUNT g(oz)						R410A	3.40k	(119.9)	/	
PROD IM	HEIGHT : H mm(inch)		319 (12-9/16)			1416 (55-3/4)			/	
	WIDTH : W mm(inch)		840 (33-3/32)			940 (37-1/32)			/	
	DEPTH : D mm(inch)		840 (33-3/32)			340 (13-13/32)			/	
PACK IM	HEIGHT : H mm		361			1556			/	
	WIDTH : W mm		929			1055			/	
	DEPTH : D mm		929			485			/	
MASS	(NET) kg(lb)		27 (60)			98 (216)			/	
	(GROSS) kg(lb)		34 (75)			108 (238)			/	
LAYERS LIMIT (actually)			11 (12)			1 (2)				
Operation Condition		Cool O.D(DBT)	18°C ~ 32°C			-10°C ~ 43°C				
		Heat O.D(DBT)	16°C ~ 30°C			-15°C ~ 24°C				
PIPING	PIPE DIAMETER mm (inch)		(Liquid)ø9.52(3/8) (Gas)ø15.88(5/8)			(Liquid)ø9.52(3/8) (Gas)ø15.88(5/8)				
	CONNECT METHOD, STD LENGTH m (ft)		flared type, 5.0(16.4)			flared type, 5.0(16.4)				
	PIPE LENGTH RANGE m (ft)		5 ~ 50 (16.4 ~ 164.0)						~	~
	I/D&O/D HEIGHT DIFFERENCE m (ft)		15 (OD located lower) / 30 (OD located higher) (49.2/98.4)							
	ADD GAS AMOUNT g/m (oz/ft)		50 (0.538)							
	PIPE LENGTH FOR ADDITIONAL GAS m (ft)		30 (98.4)							

*1: In case it is necessary to indicate the air □ow volume in (l/s), the value in (m^3/min.) shall be multiplied by 16.7 and rounded down the decimal point.
*2: If the EUROVENT Certi□ed models can be operated under the □extra-low□temperature condition, -7□C dry bulb and -8□C wet-bulb temperatures with rated voltage 230 V shall be used.
*3: Network Impedance shall be applicable for EUROPE and CHINA models.
*4: The annual consumption is calculated by multiplying the input power at 230 V (400 V) by an average of 500 hours per year in cooling mode.
*5: EER and COP classification is at 230 V (400 V) only in accordance with EU directive 2002/31/EC.
*6: SEER and SCOP classification is at 230V(400V) only in accordance with EN-14825. For heating, SCOP indicates the value of only Average heating season, Other fiche data indicates in an attached sheet.

Simultaneous (Twin) -Type

1-1. Unit Specifications

PEY1

2. Ceiling Type S-36PT2E5A×2 / U-71PEY1E5

INDOOR		MODEL	S-36PT2E5A×2							
PANEL		MODEL								
OUTDOOR		MODEL				U-71PEY1E5				
Branch pipe		MODEL	CZ-P155BK1							
PERFORMANCE TEST CONDITION			ISO5151 / EN14511 / EN14825 / EN12102							
POWER SUPPLY		ø, Hz	1ø 50Hz			1ø 50Hz				
		V	220	230	240	220	230	240	Min	Max
COOLING	CAPACITY	kW	7.1	7.1	7.1				2.0	7.7
		BTU/h	24200	24200	24200				6800	26300
	CURRENT	A	0.37×2	0.36×2	0.35×2	10.8	10.3	9.85	-	-
	INPUT POWER	W	35×2	35×2	35×2	2.155k	2.155k	2.155k	-	-
		TOTAL W		-		2.225k	2.225k	2.225k	325	2.820k
	ANNUAL CONSUMPTION	TOTAL kWh ※4		-		-	1113	-	-	-
	EER/EER CLASS	TOTAL(W/W)※5("A"~"G")	-	-	-	3.19	3.19 / B	3.19	6.15	2.73
	Erp ※6 Pdsign	kW	-	-	-	-	7.1	-		
	Erp ※6 SEER	(W/W)	-	-	-	-	6.1	-		
	Erp ※6 Annual consumption	kWh	-	-	-	-	408	-		
	Erp ※6 Class		-	-	-	-	A++	-		
	POWER FACTOR	%	-	-	-	91	91	91	-	-
	NOISE INDOOR (H/M/L)	dB-A		36/32/29			-			
		Power Level dB		54/50/47			-			
	NOISE OUTDOOR (H/L)	dB-A					50/-			
		Power Level dB					70/-			
HEATING	CAPACITY	kW	7.1	7.1	7.1				1.8	8.1
		BTU/h	24200	24200	24200				6100	27600
	CURRENT	A	0.37×2	0.36×2	0.35×2	8.75	8.35	8.00	-	-
	INPUT POWER	W	35×2	35×2	35×2	1.765k	1.765k	1.765k	-	-
		TOTAL W		-		1.835k	1.835k	1.835k	275	2.510k
	COP/COP CLASS	TOTAL(W/W)※5("A"~"G")	-	-	-	3.87	3.87 / A	3.87	6.55	3.23
	Erp ※6 Pdsign	kW	-	-	-	-	6.0	-		
	Erp ※6 Tbivalen	°C	-	-	-	-	-6	-		
	Erp ※6 SCOP	(W/W)	-	-	-	-	4.0	-		
	Erp ※6 Annual consumption	kWh	-	-	-	-	2100	-		
	Erp ※6 Class		-	-	-	-	A+	-		
	POWER FACTOR	%	-	-	-	92	92	92	-	-
	NOISE INDOOR (H/M/L)	dB-A		36/32/29			-		/	/
		Power Level dB		54/50/47			-			
	NOISE OUTDOOR (H/L)	dB-A		-			52/-		/	/
		Power Level dB		-			70/-			
EXTRA LOW TEMP	Total CAPACITY(kW)/INPUT POWER(W)/COP				-					
MAX CURRENT(A)/MAX INPUT POWER(W)			0.37×2/35×2	0.36×2/35×2	0.35×2/35×2	18.0/3.60k	18.0/3.77k	18.0/3.93k	/	
STARTING CURRENT(A)/COMP OUTPUT(W)			-	-	-	10.8/1.0k	10.3/1.0k	9.85/1.0k	/	
NETWORK IMPEDANCE (ΩMAX.)				-			-			
FM OUTPUT (W)				43			90		/	
MOISTURE REMOVAL VOLUME		L/h(Pt/h)	4.2	(2.1×2)	(8.8)		-			
External static pressure		Pa		-						
I/D AIR FLOW	COOL	m^3/min (ft^3/min)		[14/12/10.5 (494/424/371)]×2						
	HEAT	m^3/min (ft^3/min)		[14/12/10.5 (494/424/371)]×2						
O/D AIR FLOW	COOL	m^3/min (ft^3/min)				39		(1377)		
	HEAT	m^3/min (ft^3/min)				39		(1377)		
REFRIGERANT TYPE, AMOUNT g(oz)						R410A	1.70k	(60.0)	/	
PROD IM	HEIGHT : H mm(inch)			235 (9-1/4)			569 (22-13/32)		/	
	WIDTH : W mm(inch)			960 (37-25/32)			790 (31-7/64)		/	
	DEPTH : D mm(inch)			690 (27-5/32)			285 (11-7/32)		/	
PACK IM	HEIGHT : H mm			360			645		/	
	WIDTH : W mm			1025			921		/	
	DEPTH : D mm			820			386		/	
MASS	(NET) kg(lb)			27 (60)			42 (93)		/	
	(GROSS) kg(lb)			34 (75)			46 (101)		/	
LAYERS LIMIT (actually)				9 (10)			4 (5)			
Operation Condition		Cool O.D(DBT)		18°C ~ 32°C			-10°C ~ 43°C			
		Heat O.D(DBT)		16°C ~ 30°C			-15°C ~ 24°C			
PIPING	PIPE DIAMETER mm (inch)		(Liquid)ø6.35(1/4) (Gas)ø12.7(1/2)			(Liquid)ø9.52(3/8) (Gas)ø15.88(5/8)				
	CONNECT METHOD, STD LENGTH m (ft)		flared type, 5.0(16.4)			flared type, 5.0(16.4)				
	PIPE LENGTH RANGE m (ft)			5 ~ 50 (16.4 ~ 164.0)					~	~
	I/D&O/D HEIGHT DIFFERENCE m (ft)		15 (OD located lower) / 30 (OD located higher) (49.2/98.4)							
	ADD GAS AMOUNT g/m (oz/ft)			40 (0.430)						
	PIPE LENGTH FOR ADDITIONAL GAS m (ft)			20 (65.6)						

*1: In case it is necessary to indicate the air □ow volume in (l/s), the value in (m^3/min.) shall be multiplied by 16.7 and rounded down the decimal point.
*2: If the EUROVENT Certi□ed models can be operated under the □extra-low□temperature condition, -7□C dry bulb and -8□C wet-bulb temperatures with rated voltage 230 V shall be used.
*3: Network Impedance shall be applicable for EUROPE and CHINA models.
*4: The annual consumption is calculated by multiplying the input power at 230 V (400 V) by an average of 500 hours per year in cooling mode.
*5: EER and COP classification is at 230 V (400 V) only in accordance with EU directive 2002/31/EC.
*6: SEER and SCOP classification is at 230V(400V) only in accordance with EN-14825. For heating, SCOP indicates the value of only Average heating season, Other fiche data indicates in an attached sheet.

Simultaneous (Twin) -Type

1-1. Unit Speci□cations

PEY1

2. Ceiling Type S-50PT2E5A×2 / U-100PEY1E5

INDOOR		MODEL	S-50PT2E5A×2							
PANEL		MODEL								
OUTDOOR		MODEL				U-100PEY1E5				
Branch pipe		MODEL	CZ-P155BK1							
PERFORMANCE TEST CONDITION			ISO5151 / EN14511 / EN14825 / EN12102							
POWER SUPPLY		ø, Hz	1ø 50Hz			1ø 50Hz				
		V	220	230	240	220	230	240	Min	Max
COOLING	CAPACITY	kW	10.0	10.0	10.0				2.7	11.5
		BTU/h	34100	34100	34100				9200	39200
	CURRENT	A	0.39×2	0.38×2	0.37×2	15.6	15.0	14.4	-	-
	INPUT POWER	W	40×2	40×2	40×2	3.240k	3.240k	3.240k	-	-
		TOTAL W		-		3.320k	3.320k	3.320k	530	4.340k
	ANNUAL CONSUMPTION	TOTAL kWh ※4		-		-	1660	-	-	-
	EER/EER CLASS	TOTAL(W/W)※5("A"~"G")	-	-	-	3.01	3.01 / B	3.01	5.09	2.65
	Erp ※6 Pdsign	kW	-	-	-	-	10.0	-		
	Erp ※6 SEER	(W/W)	-	-	-	-	5.9	-		
	Erp ※6 Annual consumption	kWh	-	-	-	-	594	-		
	Erp ※6 Class		-	-	-	-	A+	-		
	POWER FACTOR	%	-	-	-	94	94	94	-	-
	NOISE INDOOR (H/M/L)	dB-A		37/33/29			-			
		Power Level dB		55/51/47			-			
	NOISE OUTDOOR (H/L)	dB-A					54/-			
		Power Level dB					70/-			
HEATING	CAPACITY	kW	10.0	10.0	10.0				2.1	13.8
		BTU/h	34100	34100	34100				7200	47100
	CURRENT	A	0.39×2	0.38×2	0.37×2	11.9	11.5	11.1	-	-
	INPUT POWER	W	40×2	40×2	40×2	2.520k	2.520k	2.520k	-	-
		TOTAL W		-		2.600k	2.600k	2.600k	410	4.000k
	COP/COP CLASS	TOTAL(W/W)※5("A"~"G")	-	-	-	3.85	3.85 / A	3.85	5.12	3.45
	Erp ※6 Pdsign	kW	-	-	-	-	10.0	-		
	Erp ※6 Tbivalen	°C	-	-	-	-	-7	-		
	Erp ※6 SCOP	(W/W)	-	-	-	-	3.9	-		
	Erp ※6 Annual consumption	kWh	-	-	-	-	3590	-		
	Erp ※6 Class		-	-	-	-	A	-		
	POWER FACTOR	%	-	-	-	96	95	95	-	-
	NOISE INDOOR (H/M/L)	dB-A		37/33/29			-		/	/
		Power Level dB		55/51/47			-			
	NOISE OUTDOOR (H/L)	dB-A		-			54/-		/	/
		Power Level dB		-			70/-			
EXTRA LOW TEMP	Total CAPACITY(kW)/INPUT POWER(W)/COP				-					
MAX CURRENT(A)/MAX INPUT POWER(W)			0.39×2/40×2	0.38×2/40×2	0.37×2/40×2	25.0/5.17k	25.0/5.41k	25.0/5.64k	/	
STARTING CURRENT(A)/COMP OUTPUT(W)			-	-	-	15.6/1.7k	15.0/1.7k	14.4/1.7k	/	
NETWORK IMPEDANCE (ΩMAX.)				-			-			
FM OUTPUT (W)				43			90		/	
MOISTURE REMOVAL VOLUME		L/h(Pt/h)	6.0	(3.0×2)	(12.6)		-			
External static pressure		Pa		-						
I/D AIR FLOW	COOL	m^3/min (ft^3/min)	[15/12.5/10.5 (530/441/371)]×2							
	HEAT	m^3/min (ft^3/min)	[15/12.5/10.5 (530/441/371)]×2							
O/D AIR FLOW	COOL	m^3/min (ft^3/min)				76		(2684)		
	HEAT	m^3/min (ft^3/min)				67		(2366)		
REFRIGERANT TYPE, AMOUNT g(oz)						R410A	2.60k	(91.7)	/	
PROD IM	HEIGHT : H mm(inch)		235 (9-1/4)			996 (39-7/32)			/	
	WIDTH : W mm(inch)		960 (37-25/32)			940 (37-1/32)			/	
	DEPTH : D mm(inch)		690 (27-5/32)			340 (13-13/32)			/	
PAC DIM	HEIGHT : H mm		360			1136			/	
	WIDTH : W mm		1025			1055			/	
	DEPTH : D mm		820			485			/	
MASS	(NET) kg(lb)		27 (60)			73 (161)			/	
	(GROSS) kg(lb)		34 (75)			81 (179)			/	
LAYERS LIMIT (actually)			9 (10)			2 (3)				
Operation Condition		Cool O.D(DBT)	18°C ~ 32°C			-10°C ~ 43°C				
		Heat O.D(DBT)	16°C ~ 30°C			-15°C ~ 24°C				
PIPING	PIPE DIAMETER mm (inch)		(Liquid)ø6.35(1/4) (Gas)ø12.7(1/2)			(Liquid)ø9.52(3/8) (Gas)ø15.88(5/8)				
	CONNECT METHOD, STD LENGTH m (ft)		flared type, 5.0(16.4)			flared type, 5.0(16.4)				
	PIPE LENGTH RANGE m (ft)		5 ~ 50 (16.4 ~ 164.0)						~	~
	I/D&O/D HEIGHT DIFFERENCE m (ft)		15 (OD located lower) / 30 (OD located higher) (49.2/98.4)							
	ADD GAS AMOUNT g/m (oz/ft)		50 (0.538)							
	PIPE LENGTH FOR ADDITIONAL GAS m (ft)		30 (98.4)							

*1: In case it is necessary to indicate the air □ow volume in (l/s), the value in (m^3/min.) shall be multiplied by 16.7 and rounded down the decimal point.
*2: If the EUROVENT Certi□ed models can be operated under the □extra-low□temperature condition, -7□C dry bulb and -8□C wet-bulb temperatures with rated voltage 230 V shall be used.
*3: Network Impedance shall be applicable for EUROPE and CHINA models.
*4: The annual consumption is calculated by multiplying the input power at 230 V (400 V) by an average of 500 hours per year in cooling mode.
*5: EER and COP classification is at 230 V (400 V) only in accordance with EU directive 2002/31/EC.
*6: SEER and SCOP classification is at 230V(400V) only in accordance with EN-14825. For heating, SCOP indicates the value of only Average heating season, Other fiche data indicates in an attached sheet.

Single -Type

1-1. Unit Speci□cations

PEY1

2. Ceiling Type S-60PT2E5A / U-60PEY1E5

INDOOR		MODEL	S-60PT2E5A							
PANEL		MODEL								
OUTDOOR		MODEL				U-60PEY1E5				
Branch pipe		MODEL	-							
PERFORMANCE TEST CONDITION			ISO5151 / EN14511 / EN14825 / EN12102							
POWER SUPPLY		ø, Hz	1ø 50Hz			1ø 50Hz				
		V	220	230	240	220	230	240	Min	Max
COOLING	CAPACITY	kW	6.0	6.0	6.0				2.0	7.0
		BTU/h	20500	20500	20500				6800	23900
	CURRENT	A	0.42	0.41	0.40	8.05	7.70	7.40	-	-
	INPUT POWER	W	50	50	50	1.610k	1.610k	1.610k	-	-
		TOTAL W		-		1.660k	1.660k	1.660k	325	2.500k
	ANNUAL CONSUMPTION	TOTAL kWh ※4		-		-	830	-	-	-
	EER/EER CLASS	TOTAL(W/W)※5("A"~"G")	-	-	-	3.61	3.61 / A	3.61	6.15	2.80
	Erp ※6 Pdsign	kW	-	-	-	-	6.0	-		
	Erp ※6 SEER	(W/W)	-	-	-	-	6.7	-		
	Erp ※6 Annual consumption	kWh	-	-	-	-	314	-		
	Erp ※6 Class		-	-	-	-	A++	-		
	POWER FACTOR	%	-	-	-	91	91	91	-	-
	NOISE INDOOR (H/M/L)	dB-A		38/34/30			-			
		Power Level dB		56/52/48			-			
	NOISE OUTDOOR (H/L)	dB-A					46/-			
		Power Level dB					65/-			
HEATING	CAPACITY	kW	6.0	6.0	6.0				1.8	7.0
		BTU/h	20500	20500	20500				6100	23900
	CURRENT	A	0.42	0.41	0.40	6.90	6.60	6.30	-	-
	INPUT POWER	W	50	50	50	1.380k	1.380k	1.380k	-	-
		TOTAL W		-		1.430k	1.430k	1.430k	275	2.155k
	COP/COP CLASS	TOTAL(W/W)※5("A"~"G")	-	-	-	4.20	4.20 / A	4.20	6.55	3.25
	Erp ※6 Pdsign	kW	-	-	-	-	6.0	-		
	Erp ※6 Tbivalen	°C	-	-	-	-	-6	-		
	Erp ※6 SCOP	(W/W)	-	-	-	-	4.0	-		
	Erp ※6 Annual consumption	kWh	-	-	-	-	2100	-		
	Erp ※6 Class		-	-	-	-	A+	-		
	POWER FACTOR	%	-	-	-	91	91	91	-	-
	NOISE INDOOR (H/M/L)	dB-A		38/34/30			-		/	/
		Power Level dB		56/52/48			-			
	NOISE OUTDOOR (H/L)	dB-A		-			50/-		/	/
		Power Level dB		-			69/-			
EXTRA LOW TEMP	Total CAPACITY(kW)/INPUT POWER(W)/COP					-				
MAX CURRENT(A)/MAX INPUT POWER(W)			0.42/50	0.41/50	0.40/50	18.0/3.60k	18.0/3.77k	18.0/3.93k	/	
STARTING CURRENT(A)/COMP OUTPUT(W)			-	-	-	8.05/1.0k	7.70/1.0k	7.40/1.0k	/	
NETWORK IMPEDANCE (ΩMAX.)				-			-			
FM OUTPUT (W)				74			90		/	
MOISTURE REMOVAL VOLUME		L/h(Pt/h)	3.4		(7.1)		-			
External static pressure		Pa		-						
I/D AIR FLOW	COOL	m^3/min (ft^3/min)		20/17/14.5 (706/600/512)						
	HEAT	m^3/min (ft^3/min)		20/17/14.5 (706/600/512)						
O/D AIR FLOW	COOL	m^3/min (ft^3/min)				30		(1059)		
	HEAT	m^3/min (ft^3/min)				35		(1236)		
REFRIGERANT TYPE, AMOUNT g(oz)						R410A	1.70k	(60.0)	/	
PROD	HEIGHT : H mm(inch)			235 (9-1/4)			569 (22-13/32)		/	
	WIDTH : W mm(inch)			1275 (50-3/16)			790 (31-7/64)		/	
	DEPTH : D mm(inch)			690 (27-5/32)			285 (11-7/32)		/	
PACK	HEIGHT : H mm			360			645		/	
	WIDTH : W mm			1340			921		/	
	DEPTH : D mm			820			386		/	
MASS	(NET) kg(lb)			33 (73)			42 (93)		/	
	(GROSS) kg(lb)			42 (93)			46 (101)		/	
LAYERS LIMIT (actually)				9 (10)			4 (5)			
Operation Condition		Cool O.D(DBT)		18°C ~ 32°C			-10°C ~ 43°C			
		Heat O.D(DBT)		16°C ~ 30°C			-15°C ~ 24°C			
PIPING	PIPE DIAMETER mm (inch)		(Liquid)ø9.52(3/8) (Gas)ø15.88(5/8)			(Liquid)ø9.52(3/8) (Gas)ø15.88(5/8)				
	CONNECT METHOD, STD LENGTH m (ft)		flared type, 5.0(16.4)			flared type, 5.0(16.4)				
	PIPE LENGTH RANGE m (ft)		5 ~ 50 (16.4 ~ 164.0)						~	~
	I/D&O/D HEIGHT DIFFERENCE m (ft)		15 (OD located lower) / 30 (OD located higher) (49.2/98.4)							
	ADD GAS AMOUNT g/m (oz/ft)		40 (0.430)							
	PIPE LENGTH FOR ADDITIONAL GAS m (ft)		20 (65.6)							

*1: In case it is necessary to indicate the air □ow volume in (l/s), the value in (m^3/min.) shall be multiplied by 16.7 and rounded down the decimal point.
*2: If the EUROVENT Certi□ed models can be operated under the □extra-low□temperature condition, -7□C dry bulb and -8□C wet-bulb temperatures with rated voltage 230 V shall be used.
*3: Network Impedance shall be applicable for EUROPE and CHINA models.
*4: The annual consumption is calculated by multiplying the input power at 230 V (400 V) by an average of 500 hours per year in cooling mode.
*5: EER and COP classification is at 230 V (400 V) only in accordance with EU directive 2002/31/EC.

Simultaneous (Twin) -Type

1-1. Unit Speci□cations

PEY1

2. Ceiling Type S-60PT2E5A×2 / U-125PEY1E5

INDOOR		MODEL	S-60PT2E5A×2							
PANEL		MODEL								
OUTDOOR		MODEL				U-125PEY1E5				
Branch pipe		MODEL	CZ-P155BK1							
PERFORMANCE TEST CONDITION			ISO5151 / EN14511 / EN12102							
POWER SUPPLY		ø, Hz	1ø 50Hz			1ø 50Hz				
		V	220	230	240	220	230	240	Min	Max
COOLING	CAPACITY	kW	12.5	12.5	12.5				3.8	13.5
		BTU/h	42700	42700	42700				13000	46100
	CURRENT	A	0.42×2	0.41×2	0.40×2	19.7	18.9	18.1	-	-
	INPUT POWER	W	50×2	50×2	50×2	4.050k	4.050k	4.050k	-	-
		TOTAL W		-		4.150k	4.150k	4.150k	900	5.160k
	ANNUAL CONSUMPTION	TOTAL kWh ※4		-		-	2075	-	-	-
	EER/EER CLASS	TOTAL(W/W)※5("A"~"G")	-	-	-	3.01	3.01 / B	3.01	4.22	2.62
	Erp ※6 Pdsign	kW	-	-	-	-	-	-		
	Erp ※6 SEER	(W/W)	-	-	-	-	-	-		
	Erp ※6 Annual consumption	kWh	-	-	-	-	-	-		
	Erp ※6 Class		-	-	-	-	-	-		
	POWER FACTOR	%	-	-	-	93	93	93	-	-
	NOISE INDOOR (H/M/L)	dB-A		38/34/30			-			
		Power Level dB		56/52/48			-			
	NOISE OUTDOOR (H/L)	dB-A					56/-			
		Power Level dB					73/-			
HEATING	CAPACITY	kW	12.5	12.5	12.5				3.4	15.0
		BTU/h	42700	42700	42700				11600	51200
	CURRENT	A	0.42×2	0.41×2	0.40×2	15.2	14.6	13.9	-	-
	INPUT POWER	W	50×2	50×2	50×2	3.150k	3.150k	3.150k	-	-
		TOTAL W		-		3.250k	3.250k	3.250k	730	4.400k
	COP/COP CLASS	TOTAL(W/W)※5("A"~"G")	-	-	-	3.85	3.85 / A	3.85	4.66	3.41
	Erp ※6 Pdsign	kW	-	-	-	-	-	-		
	Erp ※6 Tbivalen	°C	-	-	-	-	-	-		
	Erp ※6 SCOP	(W/W)	-	-	-	-	-	-		
	Erp ※6 Annual consumption	kWh	-	-	-	-	-	-		
	Erp ※6 Class		-	-	-	-	-	-		
	POWER FACTOR	%	-	-	-	94	94	94	-	-
	NOISE INDOOR (H/M/L)	dB-A		38/34/30			-		/	/
		Power Level dB		56/52/48			-			
	NOISE OUTDOOR (H/L)	dB-A		-			56/-		/	/
		Power Level dB		-			73/-			
EXTRA LOW TEMP	Total CAPACITY(kW)/INPUT POWER(W)/COP				-					
MAX CURRENT(A)/MAX INPUT POWER(W)			0.42×2/50×2	0.41×2/50×2	0.40×2/50×2	29.0/5.93k	29.0/6.20k	29.0/6.47k	/	
STARTING CURRENT(A)/COMP OUTPUT(W)			-	-	-	19.7/3.0k	18.9/3.0k	18.1/3.0k	/	
NETWORK IMPEDANCE (ΩMAX.)				-			-			
FM OUTPUT (W)				74			90		/	
MOISTURE REMOVAL VOLUME		L/h(Pt/h)	7.9	(3.95×2)	(16.6)		-			
External static pressure		Pa		-						
I/D AIR FLOW	COOL	m^3/min (ft^3/min)		[20/17/14.5 (706/600/512)]×2						
	HEAT	m^3/min (ft^3/min)		[20/17/14.5 (706/600/512)]×2						
O/D AIR FLOW	COOL	m^3/min (ft^3/min)				80		(2825)		
	HEAT	m^3/min (ft^3/min)				73		(2578)		
REFRIGERANT TYPE, AMOUNT g(oz)						R410A	3.20k	(112.9)	/	
PROD IM	HEIGHT : H mm(inch)			235 (9-1/4)			996 (39-7/32)		/	
	WIDTH : W mm(inch)			1275 (50-3/16)			940 (37-1/32)		/	
	DEPTH : D mm(inch)			690 (27-5/32)			340 (13-13/32)		/	
PACK IM	HEIGHT : H mm			360			1136		/	
	WIDTH : W mm			1340			1055		/	
	DEPTH : D mm			820			485		/	
MASS	(NET) kg(lb)			33 (73)			85 (187)		/	
	(GROSS) kg(lb)			42 (93)			93 (205)		/	
LAYERS LIMIT (actually)				9 (10)			2 (3)			
Operation Condition		Cool O.D(DBT)		18°C ~ 32°C			-10°C ~ 43°C			
		Heat O.D(DBT)		16°C ~ 30°C			-15°C ~ 24°C			
PIPING	PIPE DIAMETER mm (inch)		(Liquid)ø9.52(3/8) (Gas)ø15.88(5/8)			(Liquid)ø9.52(3/8) (Gas)ø15.88(5/8)				
	CONNECT METHOD, STD LENGTH m (ft)		flared type, 5.0(16.4)			flared type, 5.0(16.4)				
	PIPE LENGTH RANGE m (ft)		5 ~ 50 (16.4 ~ 164.0)						~	~
	I/D&O/D HEIGHT DIFFERENCE m (ft)		15 (OD located lower) / 30 (OD located higher) (49.2/98.4)							
	ADD GAS AMOUNT g/m (oz/ft)		50 (0.538)							
	PIPE LENGTH FOR ADDITIONAL GAS m (ft)		30 (98.4)							

*1: In case it is necessary to indicate the air □ow volume in (l/s), the value in (m^3/min.) shall be multiplied by 16.7 and rounded down the decimal point.
*2: If the EUROVENT Certi□ed models can be operated under the □extra-low□temperature condition, -7□C dry bulb and -8□C wet-bulb temperatures with rated voltage 230 V shall be used.
*3: Network Impedance shall be applicable for EUROPE and CHINA models.
*4: The annual consumption is calculated by multiplying the input power at 230 V (400 V) by an average of 500 hours per year in cooling mode.
*5: EER and COP classification is at 230 V (400 V) only in accordance with EU directive 2002/31/EC.
*6: SEER and SCOP classification is at 230V(400V) only in accordance with EN-14825. For heating, SCOP indicates the value of only Average heating season, Other fiche data indicates in an attached sheet.

Single -Type

1-1. Unit Speci□cations

PEY1

2. Ceiling Type S-71PT2E5A / U-71PEY1E5

INDOOR		MODEL	S-71PT2E5A							
PANEL		MODEL								
OUTDOOR		MODEL				U-71PEY1E5				
Branch pipe		MODEL	-							
PERFORMANCE TEST CONDITION			ISO5151 / EN14511 / EN14825 / EN12102							
POWER SUPPLY		ø, Hz	1ø 50Hz			1ø 50Hz				
		V	220	230	240	220	230	240	Min	Max
COOLING	CAPACITY	kW	7.1	7.1	7.1				2.0	7.7
		BTU/h	24200	24200	24200				6800	26300
	CURRENT	A	0.45	0.44	0.43	10.8	10.3	9.85	-	-
	INPUT POWER	W	55	55	55	2.155k	2.155k	2.155k	-	-
		TOTAL W		-		2.210k	2.210k	2.210k	325	2.820k
	ANNUAL CONSUMPTION	TOTAL kWh ※4		-		-	1105	-	-	-
	EER/EER CLASS	TOTAL(W/W)※5("A"~"G")	-	-	-	3.21	3.21 / A	3.21	6.15	2.73
	Erp ※6 Pdsign	kW	-	-	-	-	7.1	-		
	Erp ※6 SEER	(W/W)	-	-	-	-	6.1	-		
	Erp ※6 Annual consumption	kWh	-	-	-	-	408	-		
	Erp ※6 Class		-	-	-	-	A++	-		
	POWER FACTOR	%	-	-	-	91	91	91	-	-
	NOISE INDOOR (H/M/L)	dB-A		39/35/31			-			
		Power Level dB		57/53/49			-			
	NOISE OUTDOOR (H/L)	dB-A					50/-			
		Power Level dB					70/-			
HEATING	CAPACITY	kW	7.1	7.1	7.1				1.8	8.1
		BTU/h	24200	24200	24200				6100	27600
	CURRENT	A	0.45	0.44	0.43	8.75	8.35	8.00	-	-
	INPUT POWER	W	55	55	55	1.765k	1.765k	1.765k	-	-
		TOTAL W		-		1.820k	1.820k	1.820k	275	2.510k
	COP/COP CLASS	TOTAL(W/W)※5("A"~"G")	-	-	-	3.90	3.90 / A	3.90	6.55	3.23
	Erp ※6 Pdsign	kW	-	-	-	-	6.0	-		
	Erp ※6 Tbivalen	°C	-	-	-	-	-6	-		
	Erp ※6 SCOP	(W/W)	-	-	-	-	4.0	-		
	Erp ※6 Annual consumption	kWh	-	-	-	-	2100	-		
	Erp ※6 Class		-	-	-	-	A+	-		
	POWER FACTOR	%	-	-	-	92	92	92	-	-
	NOISE INDOOR (H/M/L)	dB-A		39/35/31			-		/	/
		Power Level dB		57/53/49			-			
	NOISE OUTDOOR (H/L)	dB-A		-			52/-		/	/
		Power Level dB		-			70/-			
EXTRA LOW TEMP	Total CAPACITY(kW)/INPUT POWER(W)/COP					-				
MAX CURRENT(A)/MAX INPUT POWER(W)			0.45/55	0.44/55	0.43/55	18.0/3.60k	18.0/3.77k	18.0/3.93k	/	
STARTING CURRENT(A)/COMP OUTPUT(W)			-	-	-	10.8/1.0k	10.3/1.0k	9.85/1.0k	/	
NETWORK IMPEDANCE (ΩMAX.)				-			-			
FM OUTPUT (W)				74			90		/	
MOISTURE REMOVAL VOLUME		L/h(Pt/h)	4.2		(8.8)		-			
External static pressure		Pa		-						
I/D AIR FLOW	COOL	m^3/min (ft^3/min)		21/18/15.5 (742/636/547)						
	HEAT	m^3/min (ft^3/min)		21/18/15.5 (742/636/547)						
O/D AIR FLOW	COOL	m^3/min (ft^3/min)				39		(1377)		
	HEAT	m^3/min (ft^3/min)				39		(1377)		
REFRIGERANT TYPE, AMOUNT g(oz)						R410A	1.70k	(60.0)	/	
PROD	HEIGHT : H mm(inch)			235 (9-1/4)			569 (22-13/32)		/	
	WIDTH : W mm(inch)			1275 (50-3/16)			790 (31-7/64)		/	
	DEPTH : D mm(inch)			690 (27-5/32)			285 (11-7/32)		/	
PACK	HEIGHT : H mm			360			645		/	
	WIDTH : W mm			1340			921		/	
	DEPTH : D mm			820			386		/	
MASS	(NET) kg(lb)			33 (73)			42 (93)		/	
	(GROSS) kg(lb)			42 (93)			46 (101)		/	
LAYERS LIMIT (actually)				9 (10)			4 (5)			
Operation Condition		Cool O.D(DBT)		18°C ~ 32°C			-10°C ~ 43°C			
		Heat O.D(DBT)		16°C ~ 30°C			-15°C ~ 24°C			
PIPING	PIPE DIAMETER mm (inch)		(Liquid)ø9.52(3/8) (Gas)ø15.88(5/8)			(Liquid)ø9.52(3/8) (Gas)ø15.88(5/8)				
	CONNECT METHOD, STD LENGTH m (ft)		flared type, 5.0(16.4)			flared type, 5.0(16.4)				
	PIPE LENGTH RANGE m (ft)			5 ~ 50 (16.4 ~ 164.0)					~	~
	I/D&O/D HEIGHT DIFFERENCE m (ft)		15 (OD located lower) / 30 (OD located higher) (49.2/98.4)							
	ADD GAS AMOUNT g/m (oz/ft)			40 (0.430)						
	PIPE LENGTH FOR ADDITIONAL GAS m (ft)			20 (65.6)						

*1: In case it is necessary to indicate the air □ow volume in (l/s), the value in (m^3/min.) shall be multiplied by 16.7 and rounded down the decimal point.
*2: If the EUROVENT Certi□ed models can be operated under the □extra-low□temperature condition, -7□C dry bulb and -8□C wet-bulb temperatures with rated voltage 230 V shall be used.
*3: Network Impedance shall be applicable for EUROPE and CHINA models.
*4: The annual consumption is calculated by multiplying the input power at 230 V (400 V) by an average of 500 hours per year in cooling mode.
*5: EER and COP classification is at 230 V (400 V) only in accordance with EU directive 2002/31/EC.

Single -Type

1-1. Unit Speci□cations

PEY1

2. Ceiling Type S-100PT2E5A / U-100PEY1E5

INDOOR		MODEL	S-100PT2E5A							
PANEL		MODEL								
OUTDOOR		MODEL				U100PEY1E5				
Branch pipe		MODEL	-							
PERFORMANCE TEST CONDITION			ISO5151 / EN14511 / EN14825 / EN12102							
POWER SUPPLY		ø, Hz	1ø 50Hz			1ø 50Hz				
		V	220	230	240	220	230	240	Min	Max
COOLING	CAPACITY	kW	10.0	10.0	10.0				2.7	11.5
		BTU/h	34100	34100	34100				9200	39200
	CURRENT	A	0.69	0.67	0.65	15.6	15.0	14.4	-	-
	INPUT POWER	W	80	80	80	3.240k	3.240k	3.240k	-	-
		TOTAL W		-		3.320k	3.320k	3.320k	530	4.340k
	ANNUAL CONSUMPTION	TOTAL kWh ※4		-		-	1660	-	-	-
	EER/EER CLASS	TOTAL(W/W) ※5/("A"~"G")	-	-	-	3.01	3.01 / B	3.01	5.09	2.65
	Erp ※6 Pdsign	kW	-	-	-	-	10.0	-		
	Erp ※6 SEER	(W/W)	-	-	-	-	6.1	-		
	Erp ※6 Annual consumption	kWh	-	-	-	-	574	-		
	Erp ※6 Class		-	-	-	-	A++	-		
	POWER FACTOR	%	-	-	-	94	94	94	-	-
	NOISE INDOOR (H/M/L)	dB-A		42/37/35			-			
		Power Level dB		60/55/53			-			
	NOISE OUTDOOR (H/L)	dB-A					54/-			
		Power Level dB					70/-			
HEATING	CAPACITY	kW	10.0	10.0	10.0				2.1	13.8
		BTU/h	34100	34100	34100				7200	47100
	CURRENT	A	0.69	0.67	0.65	11.9	11.5	11.1	-	-
	INPUT POWER	W	80	80	80	2.520k	2.520k	2.520k	-	-
		TOTAL W		-		2.600k	2.600k	2.600k	410	4.000k
	COP/COP CLASS	TOTAL(W/W) ※5/("A"~"G")	-	-	-	3.85	3.85 / A	3.85	5.12	3.45
	Erp ※6 Pdsign	kW	-	-	-	-	10.0	-		
	Erp ※6 Tbivalen	°C	-	-	-	-	-7	-		
	Erp ※6 SCOP	(W/W)	-	-	-	-	3.9	-		
	Erp ※6 Annual consumption	kWh	-	-	-	-	3590	-		
	Erp ※6 Class		-	-	-	-	A	-		
	POWER FACTOR	%	-	-	-	96	95	95	-	-
	NOISE INDOOR (H/M/L)	dB-A		42/37/35			-		/	/
		Power Level dB		60/55/53			-			
	NOISE OUTDOOR (H/L)	dB-A		-			54/-		/	/
		Power Level dB		-			70/-			
EXTRA LOW TEMP	Total CAPACITY(kW)/INPUT POWER(W)/COP		-							
MAX CURRENT(A)/MAX INPUT POWER(W)			0.69/80	0.67/80	0.65/80	25.0/5.17k	25.0/5.41k	25.0/5.64k	/	
STARTING CURRENT(A)/COMP OUTPUT(W)			-	-	-	15.6/1.7k	15.0/1.7k	14.4/1.7k	/	
NETWORK IMPEDANCE (ΩMAX.)				-			-			
FM OUTPUT (W)				111			90		/	
MOISTURE REMOVAL VOLUME		L/h(Pt/h)	6.0		(12.6)		-			
External static pressure		Pa		-						
I/D AIR FLOW	COOL	m^3/min (ft^3/min)		30/25/23 (1059/883/812)						
	HEAT	m^3/min (ft^3/min)		30/25/23 (1059/883/812)						
O/D AIR FLOW	COOL	m^3/min (ft^3/min)				76		(2684)		
	HEAT	m^3/min (ft^3/min)				67		(2366)		
REFRIGERANT TYPE, AMOUNT g(oz)						R410A	2.60k	(91.7)	/	
PROD. DIM	HEIGHT : H mm(inch)			235 (9-1/4)			996 (39-7/32)		/	
	WIDTH : W mm(inch)			1590 (62-19/32)			940 (37-1/32)		/	
	DEPTH : D mm(inch)			690 (27-5/32)			340 (13-13/32)		/	
PACK. DIM	HEIGHT : H mm			360			1136		/	
	WIDTH : W mm			1655			1055		/	
	DEPTH : D mm			820			485		/	
MASS	(NET) kg(lb)			40 (88)			73 (161)		/	
	(GROSS) kg(lb)			49 (108)			81 (179)		/	
LAYERS LIMIT (actually)				9 (10)			2 (3)			
Operation Condition		Cool O.D(DBT)		18°C ~ 32°C			-10°C ~ 43°C			
		Heat O.D(DBT)		16°C ~ 30°C			-15°C ~ 24°C			
PIPING	PIPE DIAMETER mm (inch)		(Liquid)ø9.52(3/8) (Gas)ø15.88(5/8)			(Liquid)ø9.52(3/8) (Gas)ø15.88(5/8)				
	CONNECT METHOD, STD LENGTH m (ft)		flared type, 5.0(16.4)			flared type, 5.0(16.4)				
	PIPE LENGTH RANGE m (ft)		5 ~ 50 (16.4 ~ 164.0)						~	~
	I/D&O/D HEIGHT DIFFERENCE m (ft)		15 (OD located lower) / 30 (OD located higher) (49.2/98.4)							
	ADD GAS AMOUNT g/m (oz/ft)		50 (0.538)							
	PIPE LENGTH FOR ADDITIONAL GAS m (ft)		30 (98.4)							

*1: In case it is necessary to indicate the air □ow volume in (l/s), the value in (m^3/min.) shall be multiplied by 16.7 and rounded down the decimal point.
*2: If the EUROVENT Certi□ed models can be operated under the □extra-low□temperature condition, -7□C dry bulb and -8□C wet-bulb temperatures with rated voltage 230 V shall be used.
*3: Network Impedance shall be applicable for EUROPE and CHINA models.
*4: The annual consumption is calculated by multiplying the input power at 230 V (400 V) by an average of 500 hours per year in cooling mode.
*5: EER and COP classification is at 230 V (400 V) only in accordance with EU directive 2002/31/EC.

Single -Type

1-1. Unit Speci□cations

PEY1

2. Ceiling Type S-125PT2E5A / U-125PEY1E5

INDOOR		MODEL	S-125PT2E5A							
PANEL		MODEL								
OUTDOOR		MODEL				U-125PEY1E5				
Branch pipe		MODEL	-							
PERFORMANCE TEST CONDITION			ISO5151 / EN14511 / EN12102							
POWER SUPPLY		ø, Hz	1ø 50Hz			1ø 50Hz				
		V	220	230	240	220	230	240	Min	Max
COOLING	CAPACITY	kW	12.5	12.5	12.5				3.8	13.5
		BTU/h	42700	42700	42700				13000	46100
	CURRENT	A	0.89	0.86	0.83	19.7	18.9	18.1	-	-
	INPUT POWER	W	110	110	110	4.040k	4.040k	4.040k	-	-
		TOTAL W		-		4.150k	4.150k	4.150k	900	5.160k
	ANNUAL CONSUMPTION	TOTAL kWh ※4		-		-	2075	-	-	-
	EER/EER CLASS	TOTAL(W/W)※5("A"~"G")	-	-	-	3.01	3.01 / B	3.01	4.22	2.62
	Erp ※6 Pdsign	kW	-	-	-	-	-	-		
	Erp ※6 SEER	(W/W)	-	-	-	-	-	-		
	Erp ※6 Annual consumption	kWh	-	-	-	-	-	-		
	Erp ※6 Class		-	-	-	-	-	-		
	POWER FACTOR	%	-	-	-	93	93	93	-	-
	NOISE INDOOR (H/M/L)	dB-A		46/40/36			-			
		Power Level dB		64/58/54			-			
	NOISE OUTDOOR (H/L)	dB-A					56/-			
		Power Level dB					73/-			
HEATING	CAPACITY	kW	12.5	12.5	12.5				3.4	15.0
		BTU/h	42700	42700	42700				11600	51200
	CURRENT	A	0.89	0.86	0.83	15.2	14.6	13.9	-	-
	INPUT POWER	W	110	110	110	3.140k	3.140k	3.140k	-	-
		TOTAL W		-		3.250k	3.250k	3.250k	730	4.400k
	COP/COP CLASS	TOTAL(W/W)※5("A"~"G")	-	-	-	3.85	3.85 / A	3.85	4.66	3.41
	Erp ※6 Pdsign	kW	-	-	-	-	-	-		
	Erp ※6 Tbivalen	°C	-	-	-	-	-	-		
	Erp ※6 SCOP	(W/W)	-	-	-	-	-	-		
	Erp ※6 Annual consumption	kWh	-	-	-	-	-	-		
	Erp ※6 Class		-	-	-	-	-	-		
	POWER FACTOR	%	-	-	-	94	94	94	-	-
	NOISE INDOOR (H/M/L)	dB-A		46/40/36			-		/	/
		Power Level dB		64/58/54			-			
	NOISE OUTDOOR (H/L)	dB-A		-			56/-		/	/
		Power Level dB		-			73/-			
EXTRA LOW TEMP	Total CAPACITY(kW)/INPUT POWER(W)/COP					-				
MAX CURRENT(A)/MAX INPUT POWER(W)			0.89/110	0.86/110	0.83/110	29.0/5.93k	29.0/6.20k	29.0/6.47k	/	
STARTING CURRENT(A)/COMP OUTPUT(W)			-	-	-	19.7/3.0k	18.9/3.0k	18.1/3.0k	/	
NETWORK IMPEDANCE (ΩMAX.)				-			-			
FM OUTPUT (W)				111			90		/	
MOISTURE REMOVAL VOLUME		L/h(Pt/h)	7.9		(16.6)		-			
External static pressure		Pa		-						
I/D AIR FLOW	COOL	m^3/min (ft^3/min)		34/28/24 (1201/989/848)						
	HEAT	m^3/min (ft^3/min)		34/28/24 (1201/989/848)						
O/D AIR FLOW	COOL	m^3/min (ft^3/min)				80		(2825)		
	HEAT	m^3/min (ft^3/min)				73		(2578)		
REFRIGERANT TYPE, AMOUNT g(oz)						R410A	3.20k	(112.9)	/	
PROD	HEIGHT : H mm(inch)			235 (9-1/4)			996 (39-7/32)		/	
	WIDTH : W mm(inch)			1590 (62-19/32)			940 (37-1/32)		/	
	DEPTH : D mm(inch)			690 (27-5/32)			340 (13-13/32)		/	
PACK	HEIGHT : H mm			360			1136		/	
	WIDTH : W mm			1655			1055		/	
	DEPTH : D mm			820			485		/	
MASS	(NET) kg(lb)			40 (88)			85 (187)		/	
	(GROSS) kg(lb)			49 (108)			93 (205)		/	
LAYERS LIMIT (actually)				9 (10)			2 (3)			
Operation Condition		Cool O.D(DBT)		18°C ~ 32°C			-10°C ~ 43°C			
		Heat O.D(DBT)		16°C ~ 30°C			-15°C ~ 24°C			
PIPING	PIPE DIAMETER mm (inch)		(Liquid)ø9.52(3/8) (Gas)ø15.88(5/8)			(Liquid)ø9.52(3/8) (Gas)ø15.88(5/8)				
	CONNECT METHOD, STD LENGTH m (ft)		flared type, 5.0(16.4)			flared type, 5.0(16.4)				
	PIPE LENGTH RANGE m (ft)		5 ~ 50 (16.4 ~ 164.0)						~	~
	I/D&O/D HEIGHT DIFFERENCE m (ft)		15 (OD located lower) / 30 (OD located higher) (49.2/98.4)							
	ADD GAS AMOUNT g/m (oz/ft)		50 (0.538)							
	PIPE LENGTH FOR ADDITIONAL GAS m (ft)		30 (98.4)							

*1: In case it is necessary to indicate the air □ow volume in (l/s), the value in (m^3/min.) shall be multiplied by 16.7 and rounded down the decimal point.
*2: If the EUROVENT Certi□ed models can be operated under the □extra-low□temperature condition, -7□C dry bulb and -8□C wet-bulb temperatures with rated voltage 230 V shall be used.
*3: Network Impedance shall be applicable for EUROPE and CHINA models.
*4: The annual consumption is calculated by multiplying the input power at 230 V (400 V) by an average of 500 hours per year in cooling mode.
*5: EER and COP classification is at 230 V (400 V) only in accordance with EU directive 2002/31/EC.

Simultaneous (Twin) -Type

1-1. Unit Speci□cations

PEY1

2. Ceiling Type S-50PT2E5A×2 / U-100PEY1E8

INDOOR		MODEL	S-50PT2E5A×2							
PANEL		MODEL								
OUTDOOR		MODEL				U-100PEY1E8				
Branch pipe		MODEL	CZ-P155BK1							
PERFORMANCE TEST CONDITION			ISO5151 / EN14511 / EN14825 / EN12102							
POWER SUPPLY		ø, Hz	1ø 50Hz			3ø 50Hz				
		V	220	230	240	380	400	415	Min	Max
COOLING	CAPACITY	kW	10.0	10.0	10.0				2.7	11.5
		BTU/h	34100	34100	34100				9200	39200
	CURRENT	A	0.39×2	0.38×2	0.37×2	5.30	5.05	4.85	-	-
	INPUT POWER	W	40×2	40×2	40×2	3.240k	3.240k	3.240k	-	-
		TOTAL W		-		3.320k	3.320k	3.320k	530	4.340k
	ANNUAL CONSUMPTION	TOTAL kWh ※4		-		-	1660	-	-	-
	EER/EER CLASS	TOTAL(W/W)※5("A"~"G")	-	-	-	3.01	3.01 / B	3.01	5.09	2.65
	Erp ※6 Pdsign	kW	-	-	-	-	10.0	-		
	Erp ※6 SEER	(W/W)	-	-	-	-	5.8	-		
	Erp ※6 Annual consumption	kWh	-	-	-	-	604	-		
	Erp ※6 Class		-	-	-	-	A+	-		
	POWER FACTOR	%	-	-	-	93	93	93	-	-
	NOISE INDOOR (H/M/L)	dB-A		37/33/29			-			
		Power Level dB		55/51/47			-			
	NOISE OUTDOOR (H/L)	dB-A					54/-			
		Power Level dB					70/-			
HEATING	CAPACITY	kW	10.0	10.0	10.0				2.1	13.8
		BTU/h	34100	34100	34100				7200	47100
	CURRENT	A	0.39×2	0.38×2	0.37×2	4.10	3.90	3.75	-	-
	INPUT POWER	W	40×2	40×2	40×2	2.520k	2.520k	2.520k	-	-
		TOTAL W		-		2.600k	2.600k	2.600k	410	4.000k
	COP/COP CLASS	TOTAL(W/W)※5("A"~"G")	-	-	-	3.85	3.85 / A	3.85	5.12	3.45
	Erp ※6 Pdsign	kW	-	-	-	-	10.0	-		
	Erp ※6 Tbivalen	°C	-	-	-	-	-7	-		
	Erp ※6 SCOP	(W/W)	-	-	-	-	3.9	-		
	Erp ※6 Annual consumption	kWh	-	-	-	-	3590	-		
	Erp ※6 Class		-	-	-	-	A	-		
	POWER FACTOR	%	-	-	-	93	93	93	-	-
	NOISE INDOOR (H/M/L)	dB-A		37/33/29			-		/	/
		Power Level dB		55/51/47			-			
	NOISE OUTDOOR (H/L)	dB-A		-			54/-		/	/
		Power Level dB		-			70/-			
EXTRA LOW TEMP	Total CAPACITY(kW)/INPUT POWER(W)/COP					-				
MAX CURRENT(A)/MAX INPUT POWER(W)			0.39×2/40×2	0.38×2/40×2	0.37×2/40×2	9.0/5.51k	9.0/5.80k	9.0/6.02k	/	
STARTING CURRENT(A)/COMP OUTPUT(W)			-	-	-	5.30/1.7k	5.05/1.7k	4.85/1.7k	/	
NETWORK IMPEDANCE (ΩMAX.)				-			-			
FM OUTPUT (W)				43			90		/	
MOISTURE REMOVAL VOLUME		L/h(Pt/h)	6.0	(3.0×2)	(12.6)		-			
External static pressure		Pa		-						
I/D AIR FLOW	COOL	m^3/min (ft^3/min)	[15/12.5/10.5 (530/441/371)]×2							
	HEAT	m^3/min (ft^3/min)	[15/12.5/10.5 (530/441/371)]×2							
O/D AIR FLOW	COOL	m^3/min (ft^3/min)				76		(2684)		
	HEAT	m^3/min (ft^3/min)				67		(2366)		
REFRIGERANT TYPE, AMOUNT g(oz)						R410A	2.60k	(91.7)	/	
PROD IM	HEIGHT : H mm(inch)		235 (9-1/4)			996 (39-7/32)			/	
	WIDTH : W mm(inch)		960 (37-25/32)			940 (37-1/32)			/	
	DEPTH : D mm(inch)		690 (27-5/32)			340 (13-13/32)			/	
PACK IM	HEIGHT : H mm		360			1136			/	
	WIDTH : W mm		1025			1055			/	
	DEPTH : D mm		820			485			/	
MASS	(NET) kg(lb)		27 (60)			73 (161)			/	
	(GROSS) kg(lb)		34 (75)			81 (179)			/	
LAYERS LIMIT (actually)			9 (10)			2 (3)				
Operation Condition		Cool O.D(DBT)	18°C ~ 32°C			-10°C ~ 43°C				
		Heat O.D(DBT)	16°C ~ 30°C			-15°C ~ 24°C				
PIPING	PIPE DIAMETER mm (inch)		(Liquid)ø6.35(1/4) (Gas)ø12.7(1/2)			(Liquid)ø9.52(3/8) (Gas)ø15.88(5/8)				
	CONNECT METHOD, STD LENGTH m (ft)		flared type, 5.0(16.4)			flared type, 5.0(16.4)				
	PIPE LENGTH RANGE m (ft)		5 ~ 50 (16.4 ~ 164.0)						~	~
	I/D&O/D HEIGHT DIFFERENCE m (ft)		15 (OD located lower) / 30 (OD located higher) (49.2/98.4)							
	ADD GAS AMOUNT g/m (oz/ft)		50 (0.538)							
	PIPE LENGTH FOR ADDITIONAL GAS m (ft)		30 (98.4)							

*1: In case it is necessary to indicate the air □ow volume in (l/s), the value in (m^3/min.) shall be multiplied by 16.7 and rounded down the decimal point.
*2: If the EUROVENT Certi□ed models can be operated under the □extra-low□temperature condition, -7□C dry bulb and -8□C wet-bulb temperatures with rated voltage 230 V shall be used.
*3: Network Impedance shall be applicable for EUROPE and CHINA models.
*4: The annual consumption is calculated by multiplying the input power at 230 V (400 V) by an average of 500 hours per year in cooling mode.
*5: EER and COP classification is at 230 V (400 V) only in accordance with EU directive 2002/31/EC.
*6: SEER and SCOP classification is at 230V(400V) only in accordance with EN-14825. For heating, SCOP indicates the value of only Average heating season, Other fiche data indicates in an attached sheet.

Simultaneous (Twin) -Type

1-1. Unit Specifications

PEY1

2. Ceiling Type S-60PT2E5A×2 / U-125PEY1E8

INDOOR		MODEL	S-60PT2E5A×2							
PANEL		MODEL								
OUTDOOR		MODEL				U-125PEY1E8				
Branch pipe		MODEL	CZ-P155BK1							
PERFORMANCE TEST CONDITION			ISO5151 / EN14511 / EN12102							
POWER SUPPLY		ø, Hz	1ø 50Hz			3ø 50Hz				
		V	220	230	240	380	400	415	Min	Max
COOLING	CAPACITY	kW	12.5	12.5	12.5				3.8	13.5
		BTU/h	42700	42700	42700				13000	46100
	CURRENT	A	0.42×2	0.41×2	0.40×2	6.55	6.20	6.00	-	-
	INPUT POWER	W	50×2	50×2	50×2	4.050k	4.050k	4.050k	-	-
		TOTAL W		-		4.150k	4.150k	4.150k	900	5.160k
	ANNUAL CONSUMPTION	TOTAL kWh ※4		-		-	2075	-	-	-
	EER/EER CLASS	TOTAL(W/W)※5("A"~"G")	-	-	-	3.01	3.01 / B	3.01	4.22	2.62
	Erp ※6 Pdsign	kW	-	-	-	-	-	-		
	Erp ※6 SEER	(W/W)	-	-	-	-	-	-		
	Erp ※6 Annual consumption	kWh	-	-	-	-	-	-		
	Erp ※6 Class		-	-	-	-	-	-		
	POWER FACTOR	%	-	-	-	94	94	94	-	-
	NOISE INDOOR (H/M/L)	dB-A		38/34/30			-			
		Power Level dB		56/52/48			-			
	NOISE OUTDOOR (H/L)	dB-A					56/-			
		Power Level dB					73/-			
HEATING	CAPACITY	kW	12.5	12.5	12.5				3.4	15.0
		BTU/h	42700	42700	42700				11600	51200
	CURRENT	A	0.42×2	0.41×2	0.40×2	5.10	4.85	4.65	-	-
	INPUT POWER	W	50×2	50×2	50×2	3.150k	3.150k	3.150k	-	-
		TOTAL W		-		3.250k	3.250k	3.250k	730	4.400k
	COP/COP CLASS	TOTAL(W/W)※5("A"~"G")	-	-	-	3.85	3.85 / A	3.85	4.66	3.41
	Erp ※6 Pdsign	kW	-	-	-	-	-	-		
	Erp ※6 Tbivalen	°C	-	-	-	-	-	-		
	Erp ※6 SCOP	(W/W)	-	-	-	-	-	-		
	Erp ※6 Annual consumption	kWh	-	-	-	-	-	-		
	Erp ※6 Class		-	-	-	-	-	-		
	POWER FACTOR	%	-	-	-	94	94	94	-	-
	NOISE INDOOR (H/M/L)	dB-A		38/34/30			-		/	/
		Power Level dB		56/52/48			-			
	NOISE OUTDOOR (H/L)	dB-A		-			56/-		/	/
		Power Level dB		-			73/-			
EXTRA LOW TEMP	Total CAPACITY(kW)/INPUT POWER(W)/COP				-					
MAX CURRENT(A)/MAX INPUT POWER(W)			0.42×2/50×2	0.41×2/50×2	0.40×2/50×2	10.0/6.19k	10.0/6.51k	10.0/6.75k	/	
STARTING CURRENT(A)/COMP OUTPUT(W)			-	-	-	6.55/3.0k	6.20/3.0k	6.00/3.0k	/	
NETWORK IMPEDANCE (ΩMAX.)				-			-			
FM OUTPUT (W)				74			90		/	
MOISTURE REMOVAL VOLUME		L/h(Pt/h)	7.9	(3.95×2)	(16.6)		-			
External static pressure		Pa		-						
I/D AIR FLOW	COOL	m^3/min (ft^3/min)		[20/17/14.5 (706/600/512)]×2						
	HEAT	m^3/min (ft^3/min)		[20/17/14.5 (706/600/512)]×2						
O/D AIR FLOW	COOL	m^3/min (ft^3/min)				80		(2825)		
	HEAT	m^3/min (ft^3/min)				73		(2578)		
REFRIGERANT TYPE, AMOUNT g(oz)						R410A	3.20k	(112.9)	/	
PROD	HEIGHT : H mm(inch)			235 (9-1/4)			996 (39-7/32)		/	
	WIDTH : W mm(inch)			1275 (50-3/16)			940 (37-1/32)		/	
	DEPTH : D mm(inch)			690 (27-5/32)			340 (13-13/32)		/	
PACK	HEIGHT : H mm			360			1136		/	
	WIDTH : W mm			1340			1055		/	
	DEPTH : D mm			820			485		/	
MASS	(NET) kg(lb)			33 (73)			85 (187)		/	
	(GROSS) kg(lb)			42 (93)			93 (205)		/	
LAYERS LIMIT (actually)				9 (10)			2 (3)			
Operation Condition		Cool O.D(DBT)		18°C ~ 32°C			-10°C ~ 43°C			
		Heat O.D(DBT)		16°C ~ 30°C			-15°C ~ 24°C			
PIPING	PIPE DIAMETER mm (inch)		(Liquid)ø9.52(3/8) (Gas)ø15.88(5/8)			(Liquid)ø9.52(3/8) (Gas)ø15.88(5/8)				
	CONNECT METHOD, STD LENGTH m (ft)		flared type, 5.0(16.4)			flared type, 5.0(16.4)				
	PIPE LENGTH RANGE m (ft)		5 ~ 50 (16.4 ~ 164.0)						~	~
	I/D&O/D HEIGHT DIFFERENCE m (ft)		15 (OD located lower) / 30 (OD located higher) (49.2/98.4)							
	ADD GAS AMOUNT g/m (oz/ft)		50 (0.538)							
	PIPE LENGTH FOR ADDITIONAL GAS m (ft)		30 (98.4)							

*1: In case it is necessary to indicate the air □ow volume in (l/s), the value in (m^3/min.) shall be multiplied by 16.7 and rounded down the decimal point.
*2: If the EUROVENT Certi□ed models can be operated under the □extra-low□temperature condition, -7□C dry bulb and -8□C wet-bulb temperatures with rated voltage 230 V shall be used.
*3: Network Impedance shall be applicable for EUROPE and CHINA models.
*4: The annual consumption is calculated by multiplying the input power at 230 V (400 V) by an average of 500 hours per year in cooling mode.
*5: EER and COP classification is at 230 V (400 V) only in accordance with EU directive 2002/31/EC.
*6: SEER and SCOP classification is at 230V(400V) only in accordance with EN-14825. For heating, SCOP indicates the value of only Average heating season, Other fiche data indicates in an attached sheet.

Simultaneous (Twin) -Type

1-1. Unit Speci□cations

PEY1

2. Ceiling Type S-71PT2E5A×2 / U-140PEY1E8

INDOOR		MODEL	S-71PT2E5A×2							
PANEL		MODEL								
OUTDOOR		MODEL				U-140PEY1E8				
Branch pipe		MODEL	CZ-P155BK1							
PERFORMANCE TEST CONDITION			ISO5151 / EN14511 / EN12102							
POWER SUPPLY		ø, Hz	1ø 50Hz			3ø 50Hz				
		V	220	230	240	380	400	415	Min	Max
COOLING	CAPACITY	kW	14.0	14.0	14.0				3.8	15.0
		BTU/h	47800	47800	47800				11300	51200
	CURRENT	A	0.45×2	0.44×2	0.43×2	7.40	7.05	6.80	-	-
	INPUT POWER	W	55×2	55×2	55×2	4.590k	4.590k	4.590k	-	-
		TOTAL W		-		4.700k	4.700k	4.700k	840	5.700k
	ANNUAL CONSUMPTION	TOTAL kWh ※4		-		-	2350	-	-	-
	EER/EER CLASS	TOTAL(W/W) ※5/("A"~"G")	-	-	-	2.98	2.98 / C	2.98	3.93	2.63
	Erp ※6 Pdsign	kW	-	-	-	-	-	-		
	Erp ※6 SEER	(W/W)	-	-	-	-	-	-		
	Erp ※6 Annual consumption	kWh	-	-	-	-	-	-		
	Erp ※6 Class		-	-	-	-	-	-		
	POWER FACTOR	%	-	-	-	94	94	94	-	-
	NOISE INDOOR (H/M/L)	dB-A		39/35/31			-			
		Power Level dB		57/53/49			-			
	NOISE OUTDOOR (H/L)	dB-A					54/-			
		Power Level dB					71/-			
HEATING	CAPACITY	kW	14.0	14.0	14.0				4.1	16.0
		BTU/h	47800	47800	47800				14000	54600
	CURRENT	A	0.45×2	0.44×2	0.43×2	5.65	5.35	5.20	-	-
	INPUT POWER	W	55×2	55×2	55×2	3.500k	3.500k	3.500k	-	-
		TOTAL W		-		3.610k	3.610k	3.610k	900	5.210k
	COP/COP CLASS	TOTAL(W/W) ※5/("A"~"G")	-	-	-	3.88	3.88 / A	3.88	4.56	3.07
	Erp ※6 Pdsign	kW	-	-	-	-	-	-		
	Erp ※6 Tbivalen	°C	-	-	-	-	-	-		
	Erp ※6 SCOP	(W/W)	-	-	-	-	-	-		
	Erp ※6 Annual consumption	kWh	-	-	-	-	-	-		
	Erp ※6 Class		-	-	-	-	-	-		
	POWER FACTOR	%	-	-	-	94	94	94	-	-
	NOISE INDOOR (H/M/L)	dB-A		39/35/31			-		/	/
		Power Level dB		57/53/49			-			
	NOISE OUTDOOR (H/L)	dB-A		-			53/-		/	/
		Power Level dB		-			70/-			
EXTRA LOW TEMP	Total CAPACITY(kW)/INPUT POWER(W)/COP				-					
MAX CURRENT(A)/MAX INPUT POWER(W)			0.45×2/55×2	0.44×2/55×2	0.43×2/55×2	10.0/6.19k	10.0/6.51k	10.0/6.75k	/	
STARTING CURRENT(A)/COMP OUTPUT(W)			-	-	-	7.40/3.0k	7.05/3.0k	6.80/3.0k	/	
NETWORK IMPEDANCE (ΩMAX.)				-			-			
FM OUTPUT (W)				74			90×2		/	
MOISTURE REMOVAL VOLUME		L/h(Pt/h)	9.0	(4.5×2)	(18.9)		-			
External static pressure		Pa		-						
I/D AIR FLOW	COOL	m^3/min (ft^3/min)		[21/18/15.5 (742/636/547)]×2						
	HEAT	m^3/min (ft^3/min)		[21/18/15.5 (742/636/547)]×2						
O/D AIR FLOW	COOL	m^3/min (ft^3/min)				135		(4767)		
	HEAT	m^3/min (ft^3/min)				120		(4238)		
REFRIGERANT TYPE, AMOUNT g(oz)						R410A	3.40k	(119.9)	/	
PROD DIM	HEIGHT : H mm(inch)			235 (9-1/4)			1416 (55-3/4)		/	
	WIDTH : W mm(inch)			1275 (50-3/16)			940 (37-1/32)		/	
	DEPTH : D mm(inch)			690 (27-5/32)			340 (13-13/32)		/	
PACK DIM	HEIGHT : H mm			360			1556		/	
	WIDTH : W mm			1340			1055		/	
	DEPTH : D mm			820			485		/	
MASS	(NET) kg(lb)			33 (73)			98 (216)		/	
	(GROSS) kg(lb)			42 (93)			108 (238)		/	
LAYERS LIMIT (actually)				9 (10)			1 (2)			
Operation Condition		Cool O.D(DBT)		18°C ~ 32°C			-10°C ~ 43°C			
		Heat O.D(DBT)		16°C ~ 30°C			-15°C ~ 24°C			
PIPING	PIPE DIAMETER mm (inch)		(Liquid)ø9.52(3/8) (Gas)ø15.88(5/8)			(Liquid)ø9.52(3/8) (Gas)ø15.88(5/8)				
	CONNECT METHOD, STD LENGTH m (ft)		flared type, 5.0(16.4)			flared type, 5.0(16.4)				
	PIPE LENGTH RANGE m (ft)			5 ~ 50 (16.4 ~ 164.0)					~	~
	I/D&O/D HEIGHT DIFFERENCE m (ft)		15 (OD located lower) / 30 (OD located higher) (49.2/98.4)							
	ADD GAS AMOUNT g/m (oz/ft)			50 (0.538)						
	PIPE LENGTH FOR ADDITIONAL GAS m (ft)			30 (98.4)						

*1: In case it is necessary to indicate the air □ow volume in (l/s), the value in (m^3/min.) shall be multiplied by 16.7 and rounded down the decimal point.
*2: If the EUROVENT Certi□ed models can be operated under the □extra-low□temperature condition, -7□C dry bulb and -8□C wet-bulb temperatures with rated voltage 230 V shall be used.
*3: Network Impedance shall be applicable for EUROPE and CHINA models.
*4: The annual consumption is calculated by multiplying the input power at 230 V (400 V) by an average of 500 hours per year in cooling mode.
*5: EER and COP classification is at 230 V (400 V) only in accordance with EU directive 2002/31/EC.
*6: SEER and SCOP classification is at 230V(400V) only in accordance with EN-14825. For heating, SCOP indicates the value of only Average heating season, Other fiche data indicates in an attached sheet.

Single -Type

1-1. Unit Speci□cations

PEY1

2. Ceiling Type S-100PT2E5A / U-100PEY1E8

INDOOR		MODEL	S-100PT2E5A							
PANEL		MODEL								
OUTDOOR		MODEL				U-100PEY1E8				
Branch pipe		MODEL	-							
PERFORMANCE TEST CONDITION			ISO5151 / EN14511 / EN14825 / EN12102							
POWER SUPPLY		ø, Hz	1ø 50Hz			3ø 50Hz				
		V	220	230	240	380	400	415	Min	Max
COOLING	CAPACITY	kW	10.0	10.0	10.0				11.5	13.5
		BTU/h	34100	34100	34100				9200	39200
	CURRENT	A	0.69	0.67	0.65	5.30	5.05	4.85	-	-
	INPUT POWER	W	80	80	80	3.240k	3.240k	3.240k	-	-
		TOTAL W		-		3.320k	3.320k	3.320k	530	4.340k
	ANNUAL CONSUMPTION	TOTAL kWh ※4		-		-	1660	-	-	-
	EER/EER CLASS	TOTAL(W/W)※5("A"~"G")	-	-	-	3.01	3.01 / B	3.01	5.09	2.65
	Erp ※6 Pdsign	kW	-	-	-	-	10.0	-		
	Erp ※6 SEER	(W/W)	-	-	-	-	6.0	-		
	Erp ※6 Annual consumption	kWh	-	-	-	-	584	-		
	Erp ※6 Class		-	-	-	-	A+	-		
	POWER FACTOR	%	-	-	-	93	93	93	-	-
	NOISE INDOOR (H/M/L)	dB-A		42/37/35			-			
		Power Level dB		60/55/53			-			
	NOISE OUTDOOR (H/L)	dB-A					54/-			
		Power Level dB					70/-			
HEATING	CAPACITY	kW	10.0	10.0	10.0				2.1	13.8
		BTU/h	34100	34100	34100				7200	47100
	CURRENT	A	0.69	0.67	0.65	4.10	3.90	3.75	-	-
	INPUT POWER	W	80	80	80	2.520k	2.520k	2.520k	-	-
		TOTAL W		-		2.600k	2.600k	2.600k	410	4.000k
	COP/COP CLASS	TOTAL(W/W)※5("A"~"G")	-	-	-	3.85	3.85 / A	3.85	5.12	3.45
	Erp ※6 Pdsign	kW	-	-	-	-	10.0	-		
	Erp ※6 Tbivalen	°C	-	-	-	-	-7	-		
	Erp ※6 SCOP	(W/W)	-	-	-	-	3.9	-		
	Erp ※6 Annual consumption	kWh	-	-	-	-	3590	-		
	Erp ※6 Class		-	-	-	-	A	-		
	POWER FACTOR	%	-	-	-	93	93	93	-	-
	NOISE INDOOR (H/M/L)	dB-A		42/37/35			-		/	/
		Power Level dB		60/55/53			-			
	NOISE OUTDOOR (H/L)	dB-A		-			54/-		/	/
		Power Level dB		-			70/-			
EXTRA LOW TEMP	Total CAPACITY(kW)/INPUT POWER(W)/COP					-				
MAX CURRENT(A)/MAX INPUT POWER(W)			0.69/80	0.67/80	0.65/80	9.0/5.51k	9.0/5.80k	9.0/6.02k	/	
STARTING CURRENT(A)/COMP OUTPUT(W)			-	-	-	5.30/1.7k	5.05/1.7k	4.85/1.7k	/	
NETWORK IMPEDANCE (ΩMAX.)				-			-			
FM OUTPUT (W)				111			90		/	
MOISTURE REMOVAL VOLUME		L/h(Pt/h)	6.0		(12.6)		-			
External static pressure		Pa		-						
I/D AIR FLOW	COOL	m^3/min (ft^3/min)		30/25/23 (1059/883/812)						
	HEAT	m^3/min (ft^3/min)		30/25/23 (1059/883/812)						
O/D AIR FLOW	COOL	m^3/min (ft^3/min)				76		(2684)		
	HEAT	m^3/min (ft^3/min)				67		(2366)		
REFRIGERANT TYPE, AMOUNT g(oz)						R410A	2.60k	(91.7)	/	
PROD	HEIGHT : H mm(inch)			235 (9-1/4)			996 (39-7/32)		/	
	WIDTH : W mm(inch)			1590 (62-19/32)			940 (37-1/32)		/	
	DEPTH : D mm(inch)			690 (27-5/32)			340 (13-13/32)		/	
PACK	HEIGHT : H mm			360			1136		/	
	WIDTH : W mm			1655			1055		/	
	DEPTH : D mm			820			485		/	
MASS	(NET) kg(lb)			40 (88)			73 (161)		/	
	(GROSS) kg(lb)			49 (108)			81 (179)		/	
LAYERS LIMIT (actually)				9 (10)			2 (3)			
Operation Condition		Cool O.D(DBT)		18°C ~ 32°C			-10°C ~ 43°C			
		Heat O.D(DBT)		16°C ~ 30°C			-15°C ~ 24°C			
PIPING	PIPE DIAMETER mm (inch)		(Liquid)ø9.52(3/8) (Gas)ø15.88(5/8)			(Liquid)ø9.52(3/8) (Gas)ø15.88(5/8)				
	CONNECT METHOD, STD LENGTH m (ft)		flared type, 5.0(16.4)			flared type, 5.0(16.4)				
	PIPE LENGTH RANGE m (ft)		5 ~ 50 (16.4 ~ 164.0)						~	~
	I/D&O/D HEIGHT DIFFERENCE m (ft)		15 (OD located lower) / 30 (OD located higher) (49.2/98.4)							
	ADD GAS AMOUNT g/m (oz/ft)		50 (0.538)							
	PIPE LENGTH FOR ADDITIONAL GAS m (ft)		30 (98.4)							

*1: In case it is necessary to indicate the air □ow volume in (l/s), the value in (m^3/min.) shall be multiplied by 16.7 and rounded down the decimal point.
*2: If the EUROVENT Certi□ed models can be operated under the □extra-low□temperature condition, -7□C dry bulb and -8□C wet-bulb temperatures with rated voltage 230 V shall be used.
*3: Network Impedance shall be applicable for EUROPE and CHINA models.
*4: The annual consumption is calculated by multiplying the input power at 230 V (400 V) by an average of 500 hours per year in cooling mode.
*5: EER and COP classification is at 230 V (400 V) only in accordance with EU directive 2002/31/EC.

Single -Type

1-1. Unit Speci□cations

PEY1

2. Ceiling Type S-125PT2E5A / U-125PEY1E8

INDOOR		MODEL	S-125PT2E5A							
PANEL		MODEL								
OUTDOOR		MODEL				U-125PEY1E8				
Branch pipe		MODEL	-							
PERFORMANCE TEST CONDITION			ISO5151 / EN14511 / EN12102							
POWER SUPPLY		ø, Hz	1ø 50Hz			3ø 50Hz				
		V	220	230	240	380	400	415	Min	Max
COOLING	CAPACITY	kW	12.5	12.5	12.5				3.8	13.5
		BTU/h	42700	42700	42700				13000	46100
	CURRENT	A	0.89	0.86	0.83	6.50	6.20	6.00	-	-
	INPUT POWER	W	110	110	110	4.040k	4.040k	4.040k	-	-
		TOTAL W		-		4.150k	4.150k	4.150k	900	5.160k
	ANNUAL CONSUMPTION	TOTAL kWh ※4		-		-	2075	-	-	-
	EER/EER CLASS	TOTAL(W/W)※5("A"~"G")	-	-	-	3.01	3.01 / B	3.01	4.22	2.62
	Erp ※6 Pdsign	kW	-	-	-	-	-	-		
	Erp ※6 SEER	(W/W)	-	-	-	-	-	-		
	Erp ※6 Annual consumption	kWh	-	-	-	-	-	-		
	Erp ※6 Class		-	-	-	-	-	-		
	POWER FACTOR	%	-	-	-	94	94	94	-	-
	NOISE INDOOR (H/M/L)	dB-A		46/40/36			-			
		Power Level dB		64/58/54			-			
	NOISE OUTDOOR (H/L)	dB-A					56/-			
		Power Level dB					73/-			
HEATING	CAPACITY	kW	12.5	12.5	12.5				3.4	15.0
		BTU/h	42700	42700	42700				11600	51200
	CURRENT	A	0.89	0.86	0.83	5.10	4.80	4.65	-	-
	INPUT POWER	W	110	110	110	3.140k	3.140k	3.140k	-	-
		TOTAL W		-		3.250k	3.250k	3.250k	730	4.400k
	COP/COP CLASS	TOTAL(W/W)※5("A"~"G")	-	-	-	3.85	3.85 / A	3.85	4.66	3.41
	Erp ※6 Pdsign	kW	-	-	-	-	-	-		
	Erp ※6 Tbivalen	°C	-	-	-	-	-	-		
	Erp ※6 SCOP	(W/W)	-	-	-	-	-	-		
	Erp ※6 Annual consumption	kWh	-	-	-	-	-	-		
	Erp ※6 Class		-	-	-	-	-	-		
	POWER FACTOR	%	-	-	-	94	94	94	-	-
	NOISE INDOOR (H/M/L)	dB-A		46/40/36			-		/	/
		Power Level dB		64/58/54			-			
	NOISE OUTDOOR (H/L)	dB-A		-			56/-		/	/
		Power Level dB		-			73/-			
EXTRA LOW TEMP	Total CAPACITY(kW)/INPUT POWER(W)/COP					-				
MAX CURRENT(A)/MAX INPUT POWER(W)			0.89/110	0.86/110	0.83/110	10.0/6.19k	10.0/6.51k	10.0/6.75k	/	
STARTING CURRENT(A)/COMP OUTPUT(W)			-	-	-	6.50/3.0k	6.20/3.0k	6.00/3.0k	/	
NETWORK IMPEDANCE (ΩMAX.)				-			-			
FM OUTPUT (W)				111			90		/	
MOISTURE REMOVAL VOLUME		L/h(Pt/h)	7.9		(16.6)		-			
External static pressure		Pa		-						
I/D AIR FLOW	COOL	m^3/min (ft^3/min)		34/28/24 (1201/989/848)						
	HEAT	m^3/min (ft^3/min)		34/28/24 (1201/989/848)						
O/D AIR FLOW	COOL	m^3/min (ft^3/min)				80		(2825)		
	HEAT	m^3/min (ft^3/min)				73		(2578)		
REFRIGERANT TYPE, AMOUNT g(oz)						R410A	3.20k	(112.9)	/	
PROD	HEIGHT : H mm(inch)			235 (9-1/4)			996 (39-7/32)		/	
	WIDTH : W mm(inch)			1590 (62-19/32)			940 (37-1/32)		/	
	DEPTH : D mm(inch)			690 (27-5/32)			340 (13-13/32)		/	
PACK	HEIGHT : H mm			360			1136		/	
	WIDTH : W mm			1655			1055		/	
	DEPTH : D mm			820			485		/	
MASS	(NET) kg(lb)			40 (88)			85 (187)		/	
	(GROSS) kg(lb)			49 (108)			93 (205)		/	
LAYERS LIMIT (actually)				9 (10)			2 (3)			
Operation Condition		Cool O.D(DBT)		18°C ~ 32°C			-10°C ~ 43°C			
		Heat O.D(DBT)		16°C ~ 30°C			-15°C ~ 24°C			
PIPING	PIPE DIAMETER mm (inch)		(Liquid)ø9.52(3/8) (Gas)ø15.88(5/8)			(Liquid)ø9.52(3/8) (Gas)ø15.88(5/8)				
	CONNECT METHOD, STD LENGTH m (ft)		flared type, 5.0(16.4)			flared type, 5.0(16.4)				
	PIPE LENGTH RANGE m (ft)		5 ~ 50 (16.4 ~ 164.0)						~	~
	I/D&O/D HEIGHT DIFFERENCE m (ft)		15 (OD located lower) / 30 (OD located higher) (49.2/98.4)							
	ADD GAS AMOUNT g/m (oz/ft)		50 (0.538)							
	PIPE LENGTH FOR ADDITIONAL GAS m (ft)		30 (98.4)							

*1: In case it is necessary to indicate the air □ow volume in (l/s), the value in (m^3/min.) shall be multiplied by 16.7 and rounded down the decimal point.
*2: If the EUROVENT Certi□ed models can be operated under the □extra-low□temperature condition, -7□C dry bulb and -8□C wet-bulb temperatures with rated voltage 230 V shall be used.
*3: Network Impedance shall be applicable for EUROPE and CHINA models.
*4: The annual consumption is calculated by multiplying the input power at 230 V (400 V) by an average of 500 hours per year in cooling mode.
*5: EER and COP classification is at 230 V (400 V) only in accordance with EU directive 2002/31/EC.

Single -Type

1-1. Unit Speci□cations

PEY1

2. Ceiling Type S-140PT2E5A / U-140PEY1E8

INDOOR		MODEL	S-140PT2E5A							
PANEL		MODEL								
OUTDOOR		MODEL				U-140PEY1E8				
Branch pipe		MODEL	-							
PERFORMANCE TEST CONDITION			ISO5151 / EN14511 / EN12102							
POWER SUPPLY		ø, Hz	1ø 50Hz			3ø 50Hz				
		V	220	230	240	380	400	415	Min	Max
COOLING	CAPACITY	kW	14.0	14.0	14.0				3.3	15.0
		BTU/h	47800	47800	47800				11300	51200
	CURRENT	A	0.94	0.91	0.88	7.40	7.00	6.80	-	-
	INPUT POWER	W	120	120	120	4.580k	4.580k	4.580k	-	-
		TOTAL W		-		4.700k	4.700k	4.700k	840	5.700k
	ANNUAL CONSUMPTION	TOTAL kWh ※4		-		-	2350	-	-	-
	EER/EER CLASS	TOTAL(W/W)※5("A"~"G")	-	-	-	2.98	2.98 / C	2.98	3.93	2.63
	Erp ※6 Pdsign	kW	-	-	-	-	-	-		
	Erp ※6 SEER	(W/W)	-	-	-	-	-	-		
	Erp ※6 Annual consumption	kWh	-	-	-	-	-	-		
	Erp ※6 Class		-	-	-	-	-	-		
	POWER FACTOR	%	-	-	-	94	94	94	-	-
	NOISE INDOOR (H/M/L)	dB-A		47/41/37			-			
		Power Level dB		65/59/55			-			
	NOISE OUTDOOR (H/L)	dB-A					54/-			
		Power Level dB					71/-			
HEATING	CAPACITY	kW	14.0	14.0	14.0				4.1	16.0
		BTU/h	47800	47800	47800				14000	54600
	CURRENT	A	0.94	0.91	0.88	5.65	5.35	5.15	-	-
	INPUT POWER	W	120	120	120	3.490k	3.490k	3.490k	-	-
		TOTAL W		-		3.610k	3.610k	3.610k	900	5.210k
	COP/COP CLASS	TOTAL(W/W)※5("A"~"G")	-	-	-	3.88	3.88 / A	3.88	4.56	3.07
	Erp ※6 Pdsign	kW	-	-	-	-	-	-		
	Erp ※6 Tbivalen	°C	-	-	-	-	-	-		
	Erp ※6 SCOP	(W/W)	-	-	-	-	-	-		
	Erp ※6 Annual consumption	kWh	-	-	-	-	-	-		
	Erp ※6 Class		-	-	-	-	-	-		
	POWER FACTOR	%	-	-	-	94	94	94	-	-
	NOISE INDOOR (H/M/L)	dB-A		47/41/37			-		/	/
		Power Level dB		65/59/55			-			
	NOISE OUTDOOR (H/L)	dB-A		-			53/-		/	/
		Power Level dB		-			70/-			
EXTRA LOW TEMP	Total CAPACITY(kW)/INPUT POWER(W)/COP					-				
MAX CURRENT(A)/MAX INPUT POWER(W)			0.94/120	0.91/120	0.88/120	10.0/6.19k	10.0/6.51k	10.0/6.75k	/	
STARTING CURRENT(A)/COMP OUTPUT(W)			-	-	-	7.40/3.0k	7.00/3.0k	6.80/3.0k	/	
NETWORK IMPEDANCE (ΩMAX.)				-			-			
FM OUTPUT (W)				111			90×2		/	
MOISTURE REMOVAL VOLUME		L/h(Pt/h)	9.0		(18.9)		-			
External static pressure		Pa		-						
I/D AIR FLOW	COOL	m^3/min (ft^3/min)		35/29/25 (1236/1024/883)						
	HEAT	m^3/min (ft^3/min)		35/29/25 (1236/1024/883)						
O/D AIR FLOW	COOL	m^3/min (ft^3/min)				135		(4767)		
	HEAT	m^3/min (ft^3/min)				120		(4238)		
REFRIGERANT TYPE, AMOUNT g(oz)						R410A	3.40k	(119.9)	/	
PROD	HEIGHT : H mm(inch)			235 (9-1/4)			1416 (55-3/4)		/	
	WIDTH : W mm(inch)			1590 (62-19/32)			940 (37-1/32)		/	
	DEPTH : D mm(inch)			690 (27-5/32)			340 (13-13/32)		/	
PACK	HEIGHT : H mm			360			1556		/	
	WIDTH : W mm			1655			1055		/	
	DEPTH : D mm			820			485		/	
MASS	(NET) kg(lb)			40 (88)			98 (216)		/	
	(GROSS) kg(lb)			49 (108)			108 (238)		/	
LAYERS LIMIT (actually)				9 (10)			1 (2)			
Operation Condition		Cool O.D(DBT)		18°C ~ 32°C			-10°C ~ 43°C			
		Heat O.D(DBT)		16°C ~ 30°C			-15°C ~ 24°C			
PIPING	PIPE DIAMETER mm (inch)		(Liquid)ø9.52(3/8) (Gas)ø15.88(5/8)			(Liquid)ø9.52(3/8) (Gas)ø15.88(5/8)				
	CONNECT METHOD, STD LENGTH m (ft)		flared type, 5.0(16.4)			flared type, 5.0(16.4)				
	PIPE LENGTH RANGE m (ft)		5 ~ 50 (16.4 ~ 164.0)						~	~
	I/D&O/D HEIGHT DIFFERENCE m (ft)		15 (OD located lower) / 30 (OD located higher) (49.2/98.4)							
	ADD GAS AMOUNT g/m (oz/ft)		50 (0.538)							
	PIPE LENGTH FOR ADDITIONAL GAS m (ft)		30 (98.4)							

*1: In case it is necessary to indicate the air □ow volume in (l/s), the value in (m^3/min.) shall be multiplied by 16.7 and rounded down the decimal point.
*2: If the EUROVENT Certi□ed models can be operated under the □extra-low□temperature condition, -7□C dry bulb and -8□C wet-bulb temperatures with rated voltage 230 V shall be used.
*3: Network Impedance shall be applicable for EUROPE and CHINA models.
*4: The annual consumption is calculated by multiplying the input power at 230 V (400 V) by an average of 500 hours per year in cooling mode.
*5: EER and COP classification is at 230 V (400 V) only in accordance with EU directive 2002/31/EC.

Simultaneous (Twin) -Type

1-1. Unit Speci□cations

PEY1

3. Wall Mounted Type S-36PK1E5A×2 / U-71PEY1E5

INDOOR		MODEL	S-36PK1E5A×2							
PANEL		MODEL	-							
OUTDOOR		MODEL				U-71PEY1E5				
Branch pipe		MODEL	-							
PERFORMANCE TEST CONDITION			ISO5151 / EN14511 / EN14825 / EN12102							
POWER SUPPLY		ø, Hz	1ø 50Hz			1ø 50Hz				
		V	220	230	240	220	230	240	Min	Max
COOLING	CAPACITY	kW	7.1	7.1	7.1				2.0	7.7
		BTU/h	24200	24200	24200				6800	26300
	CURRENT	A	0.20×2	0.19×2	0.19×2	11.7	11.3	11.0	-	-
	INPUT POWER	W	16×2	17×2	17×2	2.420k	2.420k	2.420k	-	-
		TOTAL W		-		2.450k	2.450k	2.450k	325	3.000k
	ANNUAL CONSUMPTION	TOTAL kWh ※4		-		1225	1225	1225	-	-
	EER/EER CLASS	TOTAL(W/W)※5("A"~"G")	-	-	-	2.90	2.90 / C	2.90	6.15	2.57
	Erp ※6 Pdsign	kW	-	-	-	-	7.1	-		
	Erp ※6 SEER	(W/W)	-	-	-	-	5.1	-		
	Erp ※6 Annual consumption	kWh	-	-	-	-	487	-		
	Erp ※6 Class		-	-	-	-	A	-		
	POWER FACTOR	%	-	-	-	94	93	92	-	-
	NOISE INDOOR (H/M/L)	dB-A		35/31/27			-			
		Power Level dB		52/46/41			-			
	NOISE OUTDOOR (H/L)	dB-A					50/-			
		Power Level dB					70/-			
HEATING	CAPACITY	kW	7.1	7.1	7.1				1.8	8.1
		BTU/h	24200	24200	24200				6100	27600
	CURRENT	A	0.20×2	0.19×2	0.19×2	9.00	8.70	8.50	-	-
	INPUT POWER	W	16×2	17×2	17×2	1.870k	1.870k	1.870k	-	-
		TOTAL W		-		1.900k	1.900k	1.900k	275	2.550k
	COP/COP CLASS	TOTAL(W/W)※5("A"~"G")	-	-	-	3.74	3.74 / A	3.74	6.55	3.18
	Erp ※6 Pdsign	kW	-	-	-	-	6.0	-		
	Erp ※6 Tbivalen	°C	-	-	-	-	-6	-		
	Erp ※6 SCOP	(W/W)	-	-	-	-	3.9	-		
	Erp ※6 Annual consumption	kWh	-	-	-	-	2154	-		
	Erp ※6 Class		-	-	-	-	A	-		
	POWER FACTOR	%	-	-	-	94	93	92	-	-
	NOISE INDOOR (H/M/L)	dB-A		35/31/27			-		/	/
		Power Level dB		52/46/41			-			
	NOISE OUTDOOR (H/L)	dB-A		-			52/-		/	/
		Power Level dB		-			70/-			
EXTRA LOW TEMP	Total CAPACITY(kW)/INPUT POWER(W)/COP				-					
MAX CURRENT(A)/MAX INPUT POWER(W)			0.20×2/16×2	0.19×2/17×2	0.19×2/17×2	18/3.680k	18/3.800k	18/3.930k	/	
STARTING CURRENT(A)/COMP OUTPUT(W)			-	-	-	11.7/2.4k	11.3/2.4k	10.9/2.4k	/	
NETWORK IMPEDANCE (ΩMAX.)				-			-			
FM OUTPUT (W)				47×2			90		/	
MOISTURE REMOVAL VOLUME		L/h(Pt/h)	4.2 (2.1×2)		(8.8)		-			
External static pressure		Pa		-						
I/D AIR FLOW	COOL	m^3/min (ft^3/min)		[11/9.5/7.5 (388/335/265)]×2						
	HEAT	m^3/min (ft^3/min)		[11/9.5/7.5 (388/335/265)]×2						
O/D AIR FLOW	COOL	m^3/min (ft^3/min)				39		(1377)		
	HEAT	m^3/min (ft^3/min)				39		(1377)		
REFRIGERANT TYPE, AMOUNT g(oz)						R410A	1.70k	(60.0)	/	
PROD	HEIGHT : H mm(inch)			300 (11-1/32)			569 (22-13/32)		/	
PROD	WIDTH : W mm(inch)			1065 (41-15/16)			790 (31-7/64)		/	
PROD	DEPTH : D mm(inch)			230 (9-1/32)			285 (11-7/32)		/	
PACK	HEIGHT : H mm			310			648		/	
PACK	WIDTH : W mm			1140			921		/	
PACK	DEPTH : D mm			380			386		/	
MASS	(NET) kg(lb)			13 (29)			42 (93)		/	
MASS	(GROSS) kg(lb)			17 (37)			46 (101)		/	
LAYERS LIMIT (actually)				15 (16)			4 (5)			
Operation Condition		Cool O.D(DBT)		18°C ~ 32°C			-10°C ~ 43°C			
Operation Condition		Heat O.D(DBT)		16°C ~ 30°C			-15°C ~ 24°C			
PIPING	PIPE DIAMETER mm (inch)		(Liquid)ø6.35(1/4) (Gas)ø12.7(1/2)			(Liquid)ø9.52(3/8) (Gas)ø15.88(5/8)				
PIPING	CONNECT METHOD, STD LENGTH m (ft)		flared type, 5.0(16.4)			flared type, 5.0(16.4)				
PIPING	PIPE LENGTH RANGE m (ft)			5 ~ 50 (16.4 ~ 164.0)					~	~
PIPING	I/D&O/D HEIGHT DIFFERENCE m (ft)		15 (OD located lower) / 30 (OD located higher) (49.2/98.4)							
PIPING	ADD GAS AMOUNT g/m (oz/ft)			40 (0.430)						
PIPING	PIPE LENGTH FOR ADDITIONAL GAS m (ft)			20 (65.6)						

*1: In case it is necessary to indicate the air □ow volume in (l/s), the value in (m^3/min.) shall be multiplied by 16.7 and rounded down the decimal point.
*2: If the EUROVENT Certi□ed models can be operated under the □extra-low□temperature condition, -7□C dry bulb and -8□C wet-bulb temperatures with rated voltage 230 V shall be used.
*3: Network Impedance shall be applicable for EUROPE and CHINA models.
*4: The annual consumption is calculated by multiplying the input power at 230 V (400 V) by an average of 500 hours per year in cooling mode.
*5: EER and COP classification is at 230 V (400 V) only in accordance with EU directive 2002/31/EC.
*6: SEER and SCOP classification is at 230V(400V) only in accordance with EN-14825. For heating, SCOP indicates the value of only Average heating season, Other fiche data indicates in an attached sheet.

Simultaneous (Twin) -Type

1-1. Unit Specifications

PEY1

3. Wall Mounted Type S-50PK1E5A×2 / U-100PEY1E5

INDOOR		MODEL	S-50PK1E5A×2							
PANEL		MODEL	-							
OUTDOOR		MODEL				U-100PEY1E5				
Branch pipe		MODEL	CZ-P155BK1							
PERFORMANCE TEST CONDITION			ISO5151 / EN14511 / EN14825 / EN12102							
POWER SUPPLY		ø, Hz	1ø 50Hz			1ø 50Hz				
		V	220	230	240	220	230	240	Min	Max
COOLING	CAPACITY	kW	10.0	10.0	10.0				2.7	11.0
		BTU/h	34100	34100	34100				9200	37500
	CURRENT	A	0.27×2	0.27×2	0.27×2	17.0	16.3	15.5	-	-
	INPUT POWER	W	26×2	27×2	28×2	3.515k	3.515k	3.510k	-	-
		TOTAL W		-		3.570k	3.570k	3.570k	530	4.200k
	ANNUAL CONSUMPTION	TOTAL kWh ※4		-		-	1785	-	-	-
	EER/EER CLASS	TOTAL(W/W)※5("A"~"G")	-	-	-	2.80	2.80 / C	2.80	5.09	2.62
	Erp ※6 Pdsign	kW	-	-	-	-	10.0	-		
	Erp ※6 SEER	(W/W)	-	-	-	-	6.1	-		
	Erp ※6 Annual consumption	kWh	-	-	-	-	574	-		
	Erp ※6 Class		-	-	-	-	A++	-		
	POWER FACTOR	%	-	-	-	94	94	94	-	-
	NOISE INDOOR (H/M/L)	dB-A		40/36/32			-			
		Power Level dB		57/51/46			-			
	NOISE OUTDOOR (H/L)	dB-A					54/-			
		Power Level dB					70/-			
HEATING	CAPACITY	kW	10.0	10.0	10.0				2.1	12.4
		BTU/h	34100	34100	34100				7200	42300
	CURRENT	A	0.27×2	0.27×2	0.27×2	12.9	12.4	11.9	-	-
	INPUT POWER	W	26×2	27×2	28×2	2.720k	2.720k	2.715k	-	-
		TOTAL W		-		2.775k	2.775k	2.775k	410	4.000k
	COP/COP CLASS	TOTAL(W/W)※5("A"~"G")	-	-	-	3.60	3.60 / A	3.60	5.12	3.10
	Erp ※6 Pdsign	kW	-	-	-	-	10.0	-		
	Erp ※6 Tbivalen	°C	-	-	-	-	-7	-		
	Erp ※6 SCOP	(W/W)	-	-	-	-	3.8	-		
	Erp ※6 Annual consumption	kWh	-	-	-	-	3684	-		
	Erp ※6 Class		-	-	-	-	A	-		
	POWER FACTOR	%	-	-	-	96	95	95	-	-
	NOISE INDOOR (H/M/L)	dB-A		40/36/32			-		/	/
		Power Level dB		57/51/46			-			
	NOISE OUTDOOR (H/L)	dB-A		-			54/-		/	/
		Power Level dB		-			70/-			
EXTRA LOW TEMP	Total CAPACITY(kW)/INPUT POWER(W)/COP					-				
MAX CURRENT(A)/MAX INPUT POWER(W)			0.27×2/26×2	0.27×2/27×2	0.27×2/28×2	25.0/5.300k	25.0/5.500k	25.0/5.700k	/	
STARTING CURRENT(A)/COMP OUTPUT(W)			-	-	-	17.0/1.7k	16.3/1.7k	15.5/1.7k	/	
NETWORK IMPEDANCE (ΩMAX.)				-			-			
FM OUTPUT (W)				47×2			90		/	
MOISTURE REMOVAL VOLUME		L/h(Pt/h)	6.0	(3.0×2)	(12.6)		-			
External static pressure		Pa		-						
I/D AIR FLOW	COOL	m^3/min (ft^3/min)		[14/12/10.5 (494/424/371)]×2						
	HEAT	m^3/min (ft^3/min)		[14/12/10.5 (494/424/371)]×2						
O/D AIR FLOW	COOL	m^3/min (ft^3/min)				76		(2684)		
	HEAT	m^3/min (ft^3/min)				67		(2366)		
REFRIGERANT TYPE, AMOUNT g(oz)						R410A	2.60k	(91.7)	/	
PROD IM	HEIGHT : H mm(inch)			300 (11-1/32)			996 (39-7/32)		/	
	WIDTH : W mm(inch)			1065 (41-23/64)			940 (37-1/32)		/	
	DEPTH : D mm(inch)			230 (9-1/32)			340 (13-13/32)		/	
PAC DIM	HEIGHT : H mm			310			1136		/	
	WIDTH : W mm			1140			1055		/	
	DEPTH : D mm			380			485		/	
MASS	(NET) kg(lb)			13 (29)			73 (161)		/	
	(GROSS) kg(lb)			17 (37)			81 (179)		/	
LAYERS LIMIT (actually)				15 (16)			2 (3)			
Operation Condition		Cool O.D(DBT)		18°C ~ 32°C			-10°C ~ 43°C			
		Heat O.D(DBT)		16°C ~ 30°C			-15°C ~ 24°C			
PIPING	PIPE DIAMETER mm (inch)		(Liquid)ø6.35(1/4) (Gas)ø12.7(1/2)			(Liquid)ø9.52(3/8) (Gas)ø15.88(5/8)				
	CONNECT METHOD, STD LENGTH m (ft)		flared type, 5.0(16.4)			flared type, 5.0(16.4)				
	PIPE LENGTH RANGE m (ft)			5 ~ 50 (16.4 ~ 164.0)					~	~
	I/D&O/D HEIGHT DIFFERENCE m (ft)		15 (OD located lower) / 30 (OD located higher) (49.2/98.4)							
	ADD GAS AMOUNT g/m (oz/ft)			50 (0.538)						
	PIPE LENGTH FOR ADDITIONAL GAS m (ft)			30 (98.4)						

*1: In case it is necessary to indicate the air □ow volume in (l/s), the value in (m^3/min.) shall be multiplied by 16.7 and rounded down the decimal point.
*2: If the EUROVENT Certi□ed models can be operated under the □extra-low□temperature condition, -7□C dry bulb and -8□C wet-bulb temperatures with rated voltage 230 V shall be used.
*3: Network Impedance shall be applicable for EUROPE and CHINA models.
*4: The annual consumption is calculated by multiplying the input power at 230 V (400 V) by an average of 500 hours per year in cooling mode.
*5: EER and COP classification is at 230 V (400 V) only in accordance with EU directive 2002/31/EC.
*6: SEER and SCOP classification is at 230V(400V) only in accordance with EN-14825. For heating, SCOP indicates the value of only Average heating season, Other fiche data indicates in an attached sheet.

Single-Type

1-1. Unit Speci□cations

PEY1

3. Wall Mounted Type S-60PK1E5A / U-60PEY1E5

INDOOR		MODEL	S-60PK1E5A							
PANEL		MODEL	-			-				
OUTDOOR		MODEL				U-60PEY1E5				
Branch pipe		MODEL	-							
PERFORMANCE TEST CONDITION			ISO5151 / EN14511 / EN14825 / EN12102							
POWER SUPPLY		□, Hz	1□50Hz			1□50Hz				
		V	220	230	240	220	230	240	Min	Max
COOLING	CAPACITY	kW	6.0	6.0	6.0				2.0	7.0
		BTU/h	20500	20500	20500				6800	23900
	CURRENT	A	0.59	0.58	0.52	8.80	8.50	8.25	-	-
	INPUT POWER	W	57	57	57	1.800k	1.800k	1.800k	-	-
		TOTAL W	-			1.860k	1.860k	1.860k	325	2.750k
	ANNUAL CONSUMPTION	TOTAL kWh ※4	-			930	930	930	-	-
	EER/EER CLASS	TOTAL(W/W)※5/("A"□"G")	-	-	-	3.23	3.23 / A	3.23	6.15	2.55
	Erp ※6 Pdsign	kW	-	-	-	-	6.0	-		
	Erp ※6 SEER	(W/W)	-	-	-	-	5.4	-		
	Erp ※6 Annual consumption	kWh	-	-	-	-	389	-		
	Erp ※6 Class		-	-	-	-	A	-		
	POWER FACTOR	□	-	-	-	93	92	91	-	-
	NOISE INDOOR	dB-A (H/M/L)	47/44/40							
		Power Level dB	64/59/54							
	NOISE OUTDOOR	dB-A (H/L)				46/-				
		Power Level dB				65/-				
HEATING	CAPACITY	kW	6.0	6.0	6.0				1.8	7.0
		BTU/h	20500	20500	20500				6100	23900
	CURRENT	A	0.59	0.58	0.52	7.05	6.80	6.60	-	-
	INPUT POWER	W	57	57	57	1.440k	1.440k	1.440k	-	-
		TOTAL W	-			1.500k	1.500k	1.500k	275	2.200k
	COP/COP CLASS	TOTAL(W/W)※5/("A"□"G")	-	-	-	4.00	4.00 / A	4.00	6.55	3.18
	Erp ※6 Pdsign	kW	-	-	-	-	6.0	-		
	Erp ※6 Tbivalen	°C	-	-	-	-	-6	-		
	Erp ※6 SCOP	(W/W)	-	-	-	-	3.9	-		
	Erp ※6 Annual consumption	kWh	-	-	-	-	2154	-		
	Erp ※6 Class		-	-	-	-	A	-		
	POWER FACTOR	□	-	-	-	93	92	91	-	-
	NOISE INDOOR	dB-A (H/M/L)	47/44/40			-			/	/
		Power Level dB	64/59/54			-				
	NOISE OUTDOOR	dB-A (H/L)	-			50/-			/	/
		Power Level dB	-			69/-				
EXTRA LOW TEMP	Total CAPACITY(kW)/INPUT POWER(W)/COP		-							
MAX CURRENT(A)/MAX INPUT POWER(W)			0.59/57	0.58/57	0.52/57	18/3.680k	18/3.810k	18/3.930k	/	
STARTING CURRENT(A)/COMP OUTPUT(W)			-	-	-	8.80/1.8k	8.50/1.8k	8.25/1.8k	/	
NETWORK IMPEDANCE (ΩMAX.)			-			-				
FM OUTPUT (W)			47			90			/	
MOISTURE REMOVAL VOLUME		L/h(Pt/h)	3.4 (7.1)			-				
External static pressure		Pa	-							
I/D AIR FLOW	COOL	m^3/min (ft^3/min)	18/14.5/11.5 (636/512/406)							
I/D AIR FLOW	HEAT	m^3/min (ft^3/min)	18/14.5/11.5 (636/512/406)							
O/D AIR FLOW	COOL	m^3/min (ft^3/min)				30 (1067)				
O/D AIR FLOW	HEAT	m^3/min (ft^3/min)				35 (1229)				
REFRIGERANT TYPE, AMOUNT g(oz)						R410A 1.70k (60.0)			/	
PROD DIM	HEIGHT : H mm(inch)		300 (11-1/32)			569 (22-13/32)			/	
PROD DIM	WIDTH : W mm(inch)		1065 (41-15/16)			790 (31-7/64)			/	
PROD DIM	DEPTH : D mm(inch)		230 (9-1/32)			285 (11-7/32)			/	
PAC DIM	HEIGHT : H mm		310			645			/	
PAC DIM	WIDTH : W mm		1140			921			/	
PAC DIM	DEPTH : D mm		380			386			/	
MASS	(NET) kg(lb)		14.5 (32)			42 (93)			/	
MASS	(GROSS) kg(lb)		18 (40)			46 (101)			/	
LAYERS LIMIT (actually)			15 (16)			4 (5)				
Operation Condition		Cool (DBT)	18°C □32°C			-10°C □43°C				
Operation Condition		Heat (DBT)	16°C □30°C			-15°C □24°C				
PIPING	PIPE DIAMETER mm (inch)		(Liquid)□9.52(3/8) (Gas)□15.88(5/8)			(Liquid)□9.52(3/8) (Gas)□15.88(5/8)				
PIPING	CONNECT METHOD, STD LENGTH m (ft)		" ared type, 5.0(16.4)			" ared type, 5.0(16.4)				
PIPING	PIPE LENGTH RANGE m (ft)		5 □50 (16.4 □164)						□	□
PIPING	I/D&O/D HEIGHT DIFFERENCE m (ft)		15 (OD located lower) / 30 (OD located higher) (49.2/98.4)							
PIPING	ADD GAS AMOUNT g/m (oz/ft)		40 (0.430)							
PIPING	PIPE LENGTH FOR ADDITIONAL GAS m (ft)		20 (65.6)							

*1: In case it is necessary to indicate the air " ow volume in (l/s), the value in (m^3/min.) shall be multiplied by 16.7 and rounded down the decimal point.
*2: If the EUROVENT Certi"ed models can be operated under the •extra-low□temperature condition, -7°C dry bulb and -8°C wet-bulb temperatures with rated voltage 230 V shall be used.
*3: Network Impedance shall be applicable for EUROPE and CHINA models.
*4: The annual consumption is calculated by multiplying the input power at 230 V (400 V) by an average of 500 hours per year in cooling mode.
*5: EER and COP classification is at 230 V (400 V) only in accordance with EU directive 2002/31/EC.
*6: SEER and SCOP classification is at 230V(400V) only in accordance with EN-14825. For heating, SCOP indicates the value of only Average heating season, Other fiche data indicates in an attached sheet.

Simultaneous (Twin) -Type

1-1. Unit Specifications

PEY1

3. Wall Mounted Type S-60PK1E5A×2 / U-125PEY1E5

INDOOR		MODEL	S-60PK1E5A×2							
PANEL		MODEL	-							
OUTDOOR		MODEL				U-125PEY1E5				
Branch pipe		MODEL	CZ-P155BK1							
PERFORMANCE TEST CONDITION			ISO5151 / EN14511 / EN12102							
POWER SUPPLY		ø, Hz	1ø 50Hz			1ø 50Hz				
		V	220	230	240	220	230	240	Min	Max
COOLING	CAPACITY	kW	12.5	12.5	12.5				3.8	13.2
		BTU/h	42700	42700	42700				13000	45000
	CURRENT	A	0.59×2	0.58×2	0.52×2	21.2	20.3	19.4	-	-
	INPUT POWER	W	57×2	57×2	57×2	4.345k	4.345k	4.345k	-	-
		TOTAL W		-		4.460k	4.460k	4.460k	900	5.000k
	ANNUAL CONSUMPTION	TOTAL kWh ※4		-		-	2230	-	-	-
	EER/EER CLASS	TOTAL(W/W)※5("A"~"G")	-	-	-	2.80	2.80 / C	2.80	4.22	2.64
	Erp ※6 Pdsign	kW	-	-	-	-	-	-		
	Erp ※6 SEER	(W/W)	-	-	-	-	-	-		
	Erp ※6 Annual consumption	kWh	-	-	-	-	-	-		
	Erp ※6 Class		-	-	-	-	-	-		
	POWER FACTOR	%	-	-	-	93	93	93	-	-
	NOISE INDOOR (H/M/L)	dB-A		47/44/40			-			
		Power Level dB		64/59/54			-			
	NOISE OUTDOOR (H/L)	dB-A					56/-			
		Power Level dB					73/-			
HEATING	CAPACITY	kW	12.5	12.5	12.5				3.4	15.0
		BTU/h	42700	42700	42700				11600	51200
	CURRENT	A	0.59×2	0.58×2	0.52×2	16.2	15.5	14.8	-	-
	INPUT POWER	W	57×2	57×2	57×2	3.355k	3.355k	3.355k	-	-
		TOTAL W		-		3.470k	3.470k	3.470k	730	4.800k
	COP/COP CLASS	TOTAL(W/W)※5("A"~"G")	-	-	-	3.60	3.60 / A	3.60	4.66	3.13
	Erp ※6 Pdsign	kW	-	-	-	-	-	-		
	Erp ※6 Tbivalen	°C	-	-	-	-	-	-		
	Erp ※6 SCOP	(W/W)	-	-	-	-	-	-		
	Erp ※6 Annual consumption	kWh	-	-	-	-	-	-		
	Erp ※6 Class		-	-	-	-	-	-		
	POWER FACTOR	%	-	-	-	94	94	94	-	-
	NOISE INDOOR (H/M/L)	dB-A		47/44/40			-		/	/
		Power Level dB		64/59/54			-			
	NOISE OUTDOOR (H/L)	dB-A		-			56/-		/	/
		Power Level dB		-			73/-			
EXTRA LOW TEMP	Total CAPACITY(kW)/INPUT POWER(W)/COP				-					
MAX CURRENT(A)/MAX INPUT POWER(W)			0.59×2/57×2	0.58×2/57×2	0.52×2/57×2	29.0/6.000k	29.0/6.300k	29.0/6.600k	/	
STARTING CURRENT(A)/COMP OUTPUT(W)			-	-	-	21.2/3.0k	20.3/3.0k	19.4/3.0k	/	
NETWORK IMPEDANCE (ΩMAX.)				-			-			
FM OUTPUT (W)				47×2			90		/	
MOISTURE REMOVAL VOLUME		L/h(Pt/h)	7.9	(3.95×2)	(16.6)		-			
External static pressure		Pa		-						
I/D AIR FLOW	COOL	m^3/min (ft^3/min)	[18/14.5/11.5 (636/512/406)]×2							
	HEAT	m^3/min (ft^3/min)	[18/14.5/11.5 (636/512/406)]×2							
O/D AIR FLOW	COOL	m^3/min (ft^3/min)				80		(2825)		
	HEAT	m^3/min (ft^3/min)				73		(2578)		
REFRIGERANT TYPE, AMOUNT g(oz)						R410A	3.20k	(112.9)	/	
PROD IM	HEIGHT : H mm(inch)			300 (11-1/32)			996 (39-7/32)		/	
	WIDTH : W mm(inch)			1065 (41-23/64)			940 (37-1/32)		/	
	DEPTH : D mm(inch)			230 (9-1/32)			340 (13-13/32)		/	
PAC DIM	HEIGHT : H mm			310			1136		/	
	WIDTH : W mm			1140			1055		/	
	DEPTH : D mm			380			485		/	
MASS	(NET) kg(lb)			14.5 (32)			85 (187)		/	
	(GROSS) kg(lb)			18 (40)			93 (205)		/	
LAYERS LIMIT (actually)				15 (16)			2 (3)			
Operation Condition		Cool O.D(DBT)		18°C ~ 32°C			-10°C ~ 43°C			
		Heat O.D(DBT)		16°C ~ 30°C			-15°C ~ 24°C			
PIPING	PIPE DIAMETER mm (inch)		(Liquid)ø9.52(3/8) (Gas)ø15.88(5/8)			(Liquid)ø9.52(3/8) (Gas)ø15.88(5/8)				
	CONNECT METHOD, STD LENGTH m (ft)		flared type, 5.0(16.4)			flared type, 5.0(16.4)				
	PIPE LENGTH RANGE m (ft)		5 ~ 50 (16.4 ~ 164.0)						~	~
	I/D&O/D HEIGHT DIFFERENCE m (ft)		15 (OD located lower) / 30 (OD located higher) (49.2/98.4)							
	ADD GAS AMOUNT g/m (oz/ft)		50 (0.538)							
	PIPE LENGTH FOR ADDITIONAL GAS m (ft)		30 (98.4)							

*1: In case it is necessary to indicate the air □ow volume in (l/s), the value in (m^3/min.) shall be multiplied by 16.7 and rounded down the decimal point.
*2: If the EUROVENT Certi□ed models can be operated under the □extra-low□temperature condition, -7□C dry bulb and -8□C wet-bulb temperatures with rated voltage 230 V shall be used.
*3: Network Impedance shall be applicable for EUROPE and CHINA models.
*4: The annual consumption is calculated by multiplying the input power at 230 V (400 V) by an average of 500 hours per year in cooling mode.
*5: EER and COP classification is at 230 V (400 V) only in accordance with EU directive 2002/31/EC.
*6: SEER and SCOP classification is at 230V(400V) only in accordance with EN-14825. For heating, SCOP indicates the value of only Average heating season, Other fiche data indicates in an attached sheet.

Single -Type

1-1. Unit Speci□cations

PEY1

3. Wall Mounted Type S-71PK1E5A / U-71PEY1E5

INDOOR		MODEL	S-71PK1E5A							
PANEL		MODEL	-							
OUTDOOR		MODEL				U-71PEY1E5				
Branch pipe		MODEL	-							
PERFORMANCE TEST CONDITION			ISO5151 / EN14511 / EN14825 / EN12102							
POWER SUPPLY		ø, Hz	1ø 50Hz			1ø 50Hz				
		V	220	230	240	220	230	240	Min	Max
COOLING	CAPACITY	kW	7.1	7.1	7.1				2.0	7.7
		BTU/h	24200	24200	24200				6800	26300
	CURRENT	A	0.59	0.58	0.52	11.7	11.3	10.9	-	-
	INPUT POWER	W	57	57	57	2.390k	2.390k	2.390k	-	-
		TOTAL W		-		2.450k	2.450k	2.450k	325	3.000k
	ANNUAL CONSUMPTION	TOTAL kWh ※4		-		1225	1225	1225	-	-
	EER/EER CLASS	TOTAL(W/W) ※5/("A"~"G")	-	-	-	2.90	2.90 / C	2.90	6.15	2.57
	Erp ※6 Pdsign	kW	-	-	-	-	7.1	-		
	Erp ※6 SEER	(W/W)	-	-	-	-	5.1	-		
	Erp ※6 Annual consumption	kWh	-	-	-	-	487	-		
	Erp ※6 Class		-	-	-	-	A	-		
	POWER FACTOR	%	-	-	-	93	92	91	-	-
	NOISE INDOOR (H/M/L)	dB-A		47/44/40			-			
		Power Level dB		64/59/54			-			
	NOISE OUTDOOR (H/L)	dB-A					50/-			
		Power Level dB					70/-			
HEATING	CAPACITY	kW	7.1	7.1	7.1				1.8	8.1
		BTU/h	24200	24200	24200				6100	27600
	CURRENT	A	0.59	0.58	0.52	9.00	8.70	8.40	-	-
	INPUT POWER	W	57	57	57	1.840k	1.840k	1.840k	-	-
		TOTAL W		-		1.900k	1.900k	1.900k	275	2.550k
	COP/COP CLASS	TOTAL(W/W) ※5/("A"~"G")	-	-	-	3.74	3.74 / A	3.74	6.55	3.18
	Erp ※6 Pdsign	kW	-	-	-	-	6.0	-		
	Erp ※6 Tbivalen	°C	-	-	-	-	-6	-		
	Erp ※6 SCOP	(W/W)	-	-	-	-	3.9	-		
	Erp ※6 Annual consumption	kWh	-	-	-	-	2154	-		
	Erp ※6 Class		-	-	-	-	A	-		
	POWER FACTOR	%	-	-	-	93	92	91	-	-
	NOISE INDOOR (H/M/L)	dB-A		47/44/40			-		/	/
		Power Level dB		64/59/54			-			
	NOISE OUTDOOR (H/L)	dB-A		-			52/-		/	/
		Power Level dB		-			70/-			
EXTRA LOW TEMP	Total CAPACITY(kW)/INPUT POWER(W)/COP					-				
MAX CURRENT(A)/MAX INPUT POWER(W)			0.59/57	0.58/57	0.52/57	18/3.680k	18/3.800k	18/3.930k	/	
STARTING CURRENT(A)/COMP OUTPUT(W)			-	-	-	11.7/2.4k	11.3/2.4k	10.9/2.4k	/	
NETWORK IMPEDANCE (ΩMAX.)				-			-			
FM OUTPUT (W)				47			90		/	
MOISTURE REMOVAL VOLUME		L/h(Pt/h)	4.2		(8.8)		-			
External static pressure		Pa		-						
I/D AIR FLOW	COOL	m^3/min (ft^3/min)		18/14.5/11.5 (636/512/406)						
	HEAT	m^3/min (ft^3/min)		18/14.5/11.5 (636/512/406)						
O/D AIR FLOW	COOL	m^3/min (ft^3/min)				39		(1377)		
	HEAT	m^3/min (ft^3/min)				39		(1377)		
REFRIGERANT TYPE, AMOUNT g(oz)						R410A	1.70k	(60.0)	/	
PROD	HEIGHT : H mm(inch)			300 (11-1/32)			569 (22-13/32)		/	
PROD	WIDTH : W mm(inch)			1065 (41-15/16)			790 (31-7/64)		/	
PROD	DEPTH : D mm(inch)			230 (9-1/32)			285 (11-7/32)		/	
PACK	HEIGHT : H mm			310			648		/	
PACK	WIDTH : W mm			1140			921		/	
PACK	DEPTH : D mm			380			386		/	
MASS	(NET) kg(lb)			14.5 (32)			42 (93)		/	
MASS	(GROSS) kg(lb)			18 (40)			46 (101)		/	
LAYERS LIMIT (actually)				15 (16)			4 (5)			
Operation Condition		Cool O.D(DBT)		18°C ~ 32°C			-10°C ~ 43°C			
Operation Condition		Heat O.D(DBT)		16°C ~ 30°C			-15°C ~ 24°C			
PIPING	PIPE DIAMETER mm (inch)		(Liquid)ø9.52(3/8) (Gas)ø15.88(5/8)			(Liquid)ø9.52(3/8) (Gas)ø15.88(5/8)				
PIPING	CONNECT METHOD, STD LENGTH m (ft)		flared type, 5.0(16.4)			flared type, 5.0(16.4)				
PIPING	PIPE LENGTH RANGE m (ft)			5 ~ 50 (16.4 ~ 164.0)					~	~
PIPING	I/D&O/D HEIGHT DIFFERENCE m (ft)		15 (OD located lower) / 30 (OD located higher) (49.2/98.4)							
PIPING	ADD GAS AMOUNT g/m (oz/ft)			40 (0.430)						
PIPING	PIPE LENGTH FOR ADDITIONAL GAS m (ft)			20 (65.6)						

*1: In case it is necessary to indicate the air □ow volume in (l/s), the value in (m^3/min.) shall be multiplied by 16.7 and rounded down the decimal point.
*2: If the EUROVENT Certi□ed models can be operated under the □extra-low□temperature condition, -7□C dry bulb and -8□C wet-bulb temperatures with rated voltage 230 V shall be used.
*3: Network Impedance shall be applicable for EUROPE and CHINA models.
*4: The annual consumption is calculated by multiplying the input power at 230 V (400 V) by an average of 500 hours per year in cooling mode.
*5: EER and COP classification is at 230 V (400 V) only in accordance with EU directive 2002/31/EC.
*6: SEER and SCOP classification is at 230V(400V) only in accordance with EN-14825. For heating, SCOP indicates the value of only Average heating season, Other fiche data indicates in an attached sheet.

Single -Type

1-1. Unit Speci□cations

PEY1

3. Wall Mounted Type S-100PK1E5A / U-100PEY1E5

INDOOR		MODEL	S-100PK1E5A							
PANEL		MODEL	-							
OUTDOOR		MODEL				U-100PEY1E5				
Branch pipe		MODEL	-							
PERFORMANCE TEST CONDITION			ISO5151 / EN14511 / EN14825 / EN12102							
POWER SUPPLY		ø, Hz	1ø 50Hz			1ø 50Hz				
		V	220	230	240	220	230	240	Min	Max
COOLING	CAPACITY	kW	9.0	9.0	9.0				2.7	9.7
		BTU/h	30700	30700	30700				9200	33100
	CURRENT	A	0.61	0.59	0.55	16.0	15.3	14.6	-	-
	INPUT POWER	W	65	65	65	3.305k	3.305k	3.305k	-	-
		TOTAL W		-		3.370k	3.370k	3.370k	530	3.800k
	ANNUAL CONSUMPTION	TOTAL kWh ※4		-		-	1685	-	-	-
	EER/EER CLASS	TOTAL(W/W)※5("A"~"G")	-	-	-	2.67	2.67 / D	2.67	5.09	2.55
	Erp ※6 Pdsign	kW	-	-	-	-	9.0	-		
	Erp ※6 SEER	(W/W)	-	-	-	-	5.8	-		
	Erp ※6 Annual consumption	kWh	-	-	-	-	543	-		
	Erp ※6 Class		-	-	-	-	A+	-		
	POWER FACTOR	%	-	-	-	94	94	94	-	-
	NOISE INDOOR (H/M/L)	dB-A		49/45/41			-			
		Power Level dB		66/60/55			-			
	NOISE OUTDOOR (H/L)	dB-A					54/-			
		Power Level dB					70/-			
HEATING	CAPACITY	kW	9.0	9.0	9.0				2.1	10.5
		BTU/h	30700	30700	30700				7200	35800
	CURRENT	A	0.62	0.60	0.56	11.2	10.8	10.4	-	-
	INPUT POWER	W	65	65	65	2.365k	2.365k	2.365k	-	-
		TOTAL W		-		2.430k	2.430k	2.430k	410	3.000k
	COP/COP CLASS	TOTAL(W/W)※5("A"~"G")	-	-	-	3.70	3.70 / A	3.70	5.12	3.50
	Erp ※6 Pdsign	kW	-	-	-	-	9.0	-		
	Erp ※6 Tbivalen	°C	-	-	-	-	-7	-		
	Erp ※6 SCOP	(W/W)	-	-	-	-	3.8	-		
	Erp ※6 Annual consumption	kWh	-	-	-	-	3316	-		
	Erp ※6 Class		-	-	-	-	A	-		
	POWER FACTOR	%	-	-	-	96	95	95	-	-
	NOISE INDOOR (H/M/L)	dB-A		49/45/41			-		/	/
		Power Level dB		66/60/55			-			
	NOISE OUTDOOR (H/L)	dB-A		-			54/-		/	/
		Power Level dB		-			70/-			
EXTRA LOW TEMP	Total CAPACITY(kW)/INPUT POWER(W)/COP					-				
MAX CURRENT(A)/MAX INPUT POWER(W)			0.62/65	0.60/65	0.56/65	25/5.170k	25/5.410k	25/5.640k	/	
STARTING CURRENT(A)/COMP OUTPUT(W)			-	-	-	16.0/1.7k	15.3/1.7k	14.6/1.7k	/	
NETWORK IMPEDANCE (ΩMAX.)				-			-			
FM OUTPUT (W)				47			90		/	
MOISTURE REMOVAL VOLUME		L/h(Pt/h)	5.4		(11.3)		-			
External static pressure		Pa		-			-			
I/D AIR FLOW	COOL	m^3/min (ft^3/min)		19/16.5/13 (671/583/459)						
	HEAT	m^3/min (ft^3/min)		19/16.5/13 (671/583/459)						
O/D AIR FLOW	COOL	m^3/min (ft^3/min)				76		(2684)		
	HEAT	m^3/min (ft^3/min)				67		(2366)		
REFRIGERANT TYPE, AMOUNT g(oz)						R410A	2.60k	(91.7)	/	
PROD DIM	HEIGHT : H mm(inch)			300 (11-1/32)			996 (39-7/32)		/	
	WIDTH : W mm(inch)			1065 (41-23/64)			940 (37-1/32)		/	
	DEPTH : D mm(inch)			230 (9-1/32)			340 (13-13/32)		/	
PACK DIM	HEIGHT : H mm			310			1136		/	
	WIDTH : W mm			1140			1055		/	
	DEPTH : D mm			380			485		/	
MASS	(NET) kg(lb)			14.5 (32)			73 (161)		/	
	(GROSS) kg(lb)			18 (40)			81 (179)		/	
LAYERS LIMIT (actually)				15 (16)			2 (3)			
Operation Condition		Cool O.D(DBT)		18°C ~ 32°C			-10°C ~ 43°C			
		Heat O.D(DBT)		16°C ~ 30°C			-15°C ~ 24°C			
PIPING	PIPE DIAMETER mm (inch)		(Liquid)ø9.52(3/8) (Gas)ø15.88(5/8)			(Liquid)ø9.52(3/8) (Gas)ø15.88(5/8)				
	CONNECT METHOD, STD LENGTH m (ft)		flared type, 5.0(16.4)			flared type, 5.0(16.4)				
	PIPE LENGTH RANGE m (ft)		5 ~ 50 (16.4 ~ 164.0)						~	~
	I/D&O/D HEIGHT DIFFERENCE m (ft)		15 (OD located lower) / 30 (OD located higher) (49.2/98.4)							
	ADD GAS AMOUNT g/m (oz/ft)		50 (0.538)							
	PIPE LENGTH FOR ADDITIONAL GAS m (ft)		30 (98.4)							

*1: In case it is necessary to indicate the air □ow volume in (l/s), the value in (m^3/min.) shall be multiplied by 16.7 and rounded down the decimal point.
*2: If the EUROVENT Certi□ed models can be operated under the □extra-low□temperature condition, -7□C dry bulb and -8□C wet-bulb temperatures with rated voltage 230 V shall be used.
*3: Network Impedance shall be applicable for EUROPE and CHINA models.
*4: The annual consumption is calculated by multiplying the input power at 230 V (400 V) by an average of 500 hours per year in cooling mode.
*5: EER and COP classification is at 230 V (400 V) only in accordance with EU directive 2002/31/EC.
*6: SEER and SCOP classification is at 230V(400V) only in accordance with EN-14825. For heating, SCOP indicates the value of only Average heating season, Other fiche data indicates in an attached sheet.

Simultaneous (Twin) -Type

1-1. Unit Specifications

PEY1

3. Wall Mounted Type S-50PK1E5A×2 / U-100PEY1E8

INDOOR		MODEL	S-50PK1E5A×2							
PANEL		MODEL	-							
OUTDOOR		MODEL				U-100PEY1E8				
Branch pipe		MODEL	CZ-P155BK1							
PERFORMANCE TEST CONDITION			ISO5151 / EN14511 / EN14825 / EN12102							
POWER SUPPLY		ø, Hz	1ø 50Hz			3ø 50Hz				
		V	220	230	240	380	400	415	Min	Max
COOLING	CAPACITY	kW	10.0	10.0	10.0				2.7	11.0
		BTU/h	34100	34100	34100				9200	37500
	CURRENT	A	0.27×2	0.27×2	0.27×2	5.75	5.45	5.25	-	-
	INPUT POWER	W	26×2	27×2	28×2	3.515k	3.515k	3.510k	-	-
		TOTAL W		-		3.570k	3.570k	3.570k	530	4.200k
	ANNUAL CONSUMPTION	TOTAL kWh ※4		-		-	1785	-	-	-
	EER/EER CLASS	TOTAL(W/W)※5("A"~"G")	-	-	-	2.80	2.80 / C	2.80	5.09	2.62
	Erp ※6 Pdsign	kW	-	-	-	-	10.0	-		
	Erp ※6 SEER	(W/W)	-	-	-	-	5.9	-		
	Erp ※6 Annual consumption	kWh	-	-	-	-	593	-		
	Erp ※6 Class		-	-	-	-	A+	-		
	POWER FACTOR	%	-	-	-	93	93	93	-	-
	NOISE INDOOR (H/M/L)	dB-A		40/36/32			-			
		Power Level dB		57/51/46			-			
	NOISE OUTDOOR (H/L)	dB-A					54/-			
		Power Level dB					70/-			
HEATING	CAPACITY	kW	10.0	10.0	10.0				2.1	12.4
		BTU/h	34100	34100	34100				7200	42300
	CURRENT	A	0.27×2	0.27×2	0.27×2	4.45	4.20	4.05	-	-
	INPUT POWER	W	26×2	27×2	28×2	2.720k	2.720k	2.715k	-	-
		TOTAL W		-		2.775k	2.775k	2.775k	410	4.000k
	COP/COP CLASS	TOTAL(W/W)※5("A"~"G")	-	-	-	3.60	3.60 / A	3.60	5.12	3.10
	Erp ※6 Pdsign	kW	-	-	-	-	10.0	-		
	Erp ※6 Tbivalen	°C	-	-	-	-	-7	-		
	Erp ※6 SCOP	(W/W)	-	-	-	-	3.8	-		
	Erp ※6 Annual consumption	kWh	-	-	-	-	3684	-		
	Erp ※6 Class		-	-	-	-	A	-		
	POWER FACTOR	%	-	-	-	93	93	93	-	-
	NOISE INDOOR (H/M/L)	dB-A		40/36/32			-		/	/
		Power Level dB		57/51/46			-			
	NOISE OUTDOOR (H/L)	dB-A		-			54/-		/	/
		Power Level dB		-			70/-			
EXTRA LOW TEMP	Total CAPACITY(kW)/INPUT POWER(W)/COP				-					
MAX CURRENT(A)/MAX INPUT POWER(W)			0.27×2/26×2	0.27×2/27×2	0.27×2/28×2	9.0/5.550k	9.0/5.800k	9.0/6.050k	/	
STARTING CURRENT(A)/COMP OUTPUT(W)			-	-	-	5.75/1.7k	5.45/1.7k	5.25/1.7k	/	
NETWORK IMPEDANCE (ΩMAX.)				-			-			
FM OUTPUT (W)				47×2			90		/	
MOISTURE REMOVAL VOLUME		L/h(Pt/h)	6.0	(3.0×2)	(12.6)		-			
External static pressure		Pa		-						
I/D AIR FLOW	COOL	m^3/min (ft^3/min)		[14/12/10.5 (494/424/371)]×2						
	HEAT	m^3/min (ft^3/min)		[14/12/10.5 (494/424/371)]×2						
O/D AIR FLOW	COOL	m^3/min (ft^3/min)				76		(2684)		
	HEAT	m^3/min (ft^3/min)				67		(2366)		
REFRIGERANT TYPE, AMOUNT g(oz)						R410A	2.60k	(91.7)	/	
PROD IM	HEIGHT : H mm(inch)			300 (11-1/32)			996 (39-7/32)		/	
	WIDTH : W mm(inch)			1065 (41-23/64)			940 (37-1/32)		/	
	DEPTH : D mm(inch)			230 (9-1/32)			340 (13-13/32)		/	
PACK IM	HEIGHT : H mm			310			1136		/	
	WIDTH : W mm			1140			1055		/	
	DEPTH : D mm			380			485		/	
MASS	(NET) kg(lb)			13 (29)			73 (161)		/	
	(GROSS) kg(lb)			17 (37)			81 (179)		/	
LAYERS LIMIT (actually)				15 (16)			2 (3)			
Operation Condition		Cool O.D(DBT)		18°C ~ 32°C			-10°C ~ 43°C			
		Heat O.D(DBT)		16°C ~ 30°C			-15°C ~ 24°C			
PIPING	PIPE DIAMETER mm (inch)		(Liquid)ø6.35(1/4) (Gas)ø12.7(1/2)			(Liquid)ø9.52(3/8) (Gas)ø15.88(5/8)				
	CONNECT METHOD, STD LENGTH m (ft)		flared type, 5.0(16.4)			flared type, 5.0(16.4)				
	PIPE LENGTH RANGE m (ft)		5 ~ 50 (16.4 ~ 164.0)						~	~
	I/D&O/D HEIGHT DIFFERENCE m (ft)		15 (OD located lower) / 30 (OD located higher) (49.2/98.4)							
	ADD GAS AMOUNT g/m (oz/ft)		50 (0.538)							
	PIPE LENGTH FOR ADDITIONAL GAS m (ft)		30 (98.4)							

*1: In case it is necessary to indicate the air □ow volume in (l/s), the value in (m^3/min.) shall be multiplied by 16.7 and rounded down the decimal point.
*2: If the EUROVENT Certi□ed models can be operated under the □extra-low□temperature condition, -7□C dry bulb and -8□C wet-bulb temperatures with rated voltage 230 V shall be used.
*3: Network Impedance shall be applicable for EUROPE and CHINA models.
*4: The annual consumption is calculated by multiplying the input power at 230 V (400 V) by an average of 500 hours per year in cooling mode.
*5: EER and COP classification is at 230 V (400 V) only in accordance with EU directive 2002/31/EC.
*6: SEER and SCOP classification is at 230V(400V) only in accordance with EN-14825. For heating, SCOP indicates the value of only Average heating season, Other fiche data indicates in an attached sheet.

Simultaneous (Twin) -Type

1-1. Unit Specifications

PEY1

3. Wall Mounted Type S-60PK1E5A×2 / U-125PEY1E8

INDOOR		MODEL	S-60PK1E5A×2							
PANEL		MODEL	-							
OUTDOOR		MODEL				U-125PEY1E8				
Branch pipe		MODEL	CZ-P155BK1							
PERFORMANCE TEST CONDITION			ISO5151 / EN14511 / EN12102							
POWER SUPPLY		ø, Hz	1ø 50Hz			3ø 50Hz				
		V	220	230	240	380	400	415	Min	Max
COOLING	CAPACITY	kW	12.5	12.5	12.5				3.8	13.2
		BTU/h	42700	42700	42700				13000	45000
	CURRENT	A	0.59×2	0.58×2	0.52×2	7.00	6.70	6.45	-	-
	INPUT POWER	W	57×2	57×2	57×2	4.345k	4.345k	4.345k	-	-
		TOTAL W		-		4.460k	4.460k	4.460k	900	5.000k
	ANNUAL CONSUMPTION	TOTAL kWh ※4		-		-	2230	-	-	-
	EER/EER CLASS	TOTAL(W/W)※5("A"~"G")	-	-	-	2.80	2.80 / C	2.80	4.22	2.64
	Erp ※6 Pdsign	kW	-	-	-	-	-	-		
	Erp ※6 SEER	(W/W)	-	-	-	-	-	-		
	Erp ※6 Annual consumption	kWh	-	-	-	-	-	-		
	Erp ※6 Class		-	-	-	-	-	-		
	POWER FACTOR	%	-	-	-	94	94	94	-	-
	NOISE INDOOR (H/M/L)	dB-A		47/44/40			-			
		Power Level dB		64/59/54			-			
	NOISE OUTDOOR (H/L)	dB-A					56/-			
		Power Level dB					73/-			
HEATING	CAPACITY	kW	12.5	12.5	12.5				3.4	15.0
		BTU/h	42700	42700	42700				11600	51200
	CURRENT	A	0.59×2	0.58×2	0.52×2	5.40	5.15	4.95	-	-
	INPUT POWER	W	57×2	57×2	57×2	3.355k	3.355k	3.355k	-	-
		TOTAL W		-		3.470k	3.470k	3.470k	730	4.800k
	COP/COP CLASS	TOTAL(W/W)※5("A"~"G")	-	-	-	3.60	3.60 / A	3.60	4.66	3.13
	Erp ※6 Pdsign	kW	-	-	-	-	-	-		
	Erp ※6 Tbivalen	°C	-	-	-	-	-	-		
	Erp ※6 SCOP	(W/W)	-	-	-	-	-	-		
	Erp ※6 Annual consumption	kWh	-	-	-	-	-	-		
	Erp ※6 Class		-	-	-	-	-	-		
	POWER FACTOR	%	-	-	-	94	94	94	-	-
	NOISE INDOOR (H/M/L)	dB-A		47/44/40			-		/	/
		Power Level dB		64/59/54			-			
	NOISE OUTDOOR (H/L)	dB-A		-			56/-		/	/
		Power Level dB		-			73/-			
EXTRA LOW TEMP	Total CAPACITY(kW)/INPUT POWER(W)/COP					-				
MAX CURRENT(A)/MAX INPUT POWER(W)			0.59×2/57×2	0.58×2/57×2	0.52×2/57×2	10.0/6.200k	10.0/6.500k	10.0/6.750k	/	
STARTING CURRENT(A)/COMP OUTPUT(W)			-	-	-	7.00/3.0k	6.70/3.0k	6.45/3.0k	/	
NETWORK IMPEDANCE (ΩMAX.)				-			-			
FM OUTPUT (W)				47×2			90		/	
MOISTURE REMOVAL VOLUME		L/h(Pt/h)	7.9	(3.95×2)	(16.6)		-			
External static pressure		Pa		-						
I/D AIR FLOW	COOL	m^3/min (ft^3/min)	[18/14.5/11.5 (636/512/406)]×2							
	HEAT	m^3/min (ft^3/min)	[18/14.5/11.5 (636/512/406)]×2							
O/D AIR FLOW	COOL	m^3/min (ft^3/min)				80		(2825)		
	HEAT	m^3/min (ft^3/min)				73		(2578)		
REFRIGERANT TYPE, AMOUNT g(oz)						R410A	3.20k	(112.9)	/	
PROD IM	HEIGHT : H mm(inch)			300 (11-1/32)			996 (39-7/32)		/	
	WIDTH : W mm(inch)			1065 (41-23/64)			940 (37-1/32)		/	
	DEPTH : D mm(inch)			230 (9-1/32)			340 (13-13/32)		/	
PAC DIM	HEIGHT : H mm			310			1136		/	
	WIDTH : W mm			1140			1055		/	
	DEPTH : D mm			380			485		/	
MASS	(NET) kg(lb)			14.5 (32)			85 (187)		/	
	(GROSS) kg(lb)			18 (40)			93 (205)		/	
LAYERS LIMIT (actually)				15 (16)			2 (3)			
Operation Condition		Cool O.D(DBT)		18°C ~ 32°C			-10°C ~ 43°C			
		Heat O.D(DBT)		16°C ~ 30°C			-15°C ~ 24°C			
PIPING	PIPE DIAMETER mm (inch)		(Liquid)ø9.52(3/8) (Gas)ø15.88(5/8)			(Liquid)ø9.52(3/8) (Gas)ø15.88(5/8)				
	CONNECT METHOD, STD LENGTH m (ft)		flared type, 5.0(16.4)			flared type, 5.0(16.4)				
	PIPE LENGTH RANGE m (ft)		5 ~ 50 (16.4 ~ 164.0)						~	~
	I/D&O/D HEIGHT DIFFERENCE m (ft)		15 (OD located lower) / 30 (OD located higher) (49.2/98.4)							
	ADD GAS AMOUNT g/m (oz/ft)		50 (0.538)							
	PIPE LENGTH FOR ADDITIONAL GAS m (ft)		30 (98.4)							

*1: In case it is necessary to indicate the air □ow volume in (l/s), the value in (m^3/min.) shall be multiplied by 16.7 and rounded down the decimal point.
*2: If the EUROVENT Certi□ed models can be operated under the □extra-low□temperature condition, -7□C dry bulb and -8□C wet-bulb temperatures with rated voltage 230 V shall be used.
*3: Network Impedance shall be applicable for EUROPE and CHINA models.
*4: The annual consumption is calculated by multiplying the input power at 230 V (400 V) by an average of 500 hours per year in cooling mode.
*5: EER and COP classification is at 230 V (400 V) only in accordance with EU directive 2002/31/EC.
*6: SEER and SCOP classification is at 230V(400V) only in accordance with EN-14825. For heating, SCOP indicates the value of only Average heating season, Other fiche data indicates in an attached sheet.

Simultaneous (Twin) -Type

1-1. Unit Speci□cations

PEY1

3. Wall Mounted Type S-71PK1E5A×2 / U-140PEY1E8

INDOOR		MODEL	S-71PK1E5A×2							
PANEL		MODEL	-							
OUTDOOR		MODEL				U-140PEY1E8				
Branch pipe		MODEL	CZ-P155BK1							
PERFORMANCE TEST CONDITION			ISO5151 / EN14511 / EN12102							
POWER SUPPLY		ø, Hz	1ø 50Hz			3ø 50Hz				
		V	220	230	240	380	400	415	Min	Max
COOLING	CAPACITY	kW	14.0	14.0	14.0				3.3	15.5
		BTU/h	47800	47800	47800				11300	52900
	CURRENT	A	0.59×2	0.58×2	0.52×2	7.20	6.95	6.75	-	-
	INPUT POWER	W	57×2	57×2	57×2	4.616k	4.616k	4.616k	-	-
		TOTAL W		-		4.730k	4.730k	4.730k	840	6.000k
	ANNUAL CONSUMPTION	TOTAL kWh ※4		-		-	2365	-	-	-
	EER/EER CLASS	TOTAL(W/W) ※5/("A"~"G")	-	-	-	2.96	2.96 / C	2.96	3.93	2.58
	Erp ※6 Pdsign	kW	-	-	-	-	-	-		
	Erp ※6 SEER	(W/W)	-	-	-	-	-	-		
	Erp ※6 Annual consumption	kWh	-	-	-	-	-	-		
	Erp ※6 Class		-	-	-	-	-	-		
	POWER FACTOR	%	-	-	-	97	96	95	-	-
	NOISE INDOOR (H/M/L)	dB-A		47/44/40			-			
		Power Level dB		64/59/54			-			
	NOISE OUTDOOR (H/L)	dB-A					54/-			
		Power Level dB					71/-			
HEATING	CAPACITY	kW	14.0	14.0	14.0				4.1	16.0
		BTU/h	47800	47800	47800				14000	54600
	CURRENT	A	0.59×2	0.58×2	0.52×2	5.90	5.65	5.50	-	-
	INPUT POWER	W	57×2	57×2	57×2	3.766k	3.766k	3.766k	-	-
		TOTAL W		-		3.880k	3.880k	3.880k	900	5.200k
	COP/COP CLASS	TOTAL(W/W) ※5/("A"~"G")	-	-	-	3.61	3.61 / A	3.61	4.56	3.08
	Erp ※6 Pdsign	kW	-	-	-	-	-	-		
	Erp ※6 Tbivalen	°C	-	-	-	-	-	-		
	Erp ※6 SCOP	(W/W)	-	-	-	-	-	-		
	Erp ※6 Annual consumption	kWh	-	-	-	-	-	-		
	Erp ※6 Class		-	-	-	-	-	-		
	POWER FACTOR	%	-	-	-	97	96	95	-	-
	NOISE INDOOR (H/M/L)	dB-A		47/44/40			-		/	/
		Power Level dB		64/59/54			-			
	NOISE OUTDOOR (H/L)	dB-A		-			53/-		/	/
		Power Level dB		-			70/-			
EXTRA LOW TEMP	Total CAPACITY(kW)/INPUT POWER(W)/COP					-				
MAX CURRENT(A)/MAX INPUT POWER(W)			0.59×2/57×2	0.58×2/57×2	0.52×2/57×2	10.0/6.200k	10.0/6.500k	10.0/6.750k	/	
STARTING CURRENT(A)/COMP OUTPUT(W)			-	-	-	7.20/3.0k	6.95/3.0k	6.75/3.0k	/	
NETWORK IMPEDANCE (ΩMAX.)				-			-			
FM OUTPUT (W)				47			90×2		/	
MOISTURE REMOVAL VOLUME		L/h(Pt/h)	9.0	(4.5×2)	(18.9)		-			
External static pressure		Pa		-						
I/D AIR FLOW	COOL	m^3/min (ft^3/min)		[18/14.5/11.5 (636/512/406)]×2						
	HEAT	m^3/min (ft^3/min)		[18/14.5/11.5 (636/512/406)]×2						
O/D AIR FLOW	COOL	m^3/min (ft^3/min)				135		(4767)		
	HEAT	m^3/min (ft^3/min)				120		(4238)		
REFRIGERANT TYPE, AMOUNT g(oz)						R410A	3.40k	(119.9)	/	
PROD IM	HEIGHT : H mm(inch)			300 (11-1/32)			1416 (55-3/4)		/	
	WIDTH : W mm(inch)			1065 (41-23/64)			940 (37-1/32)		/	
	DEPTH : D mm(inch)			230 (9-1/32)			340 (13-13/32)		/	
PACK IM	HEIGHT : H mm			310			1556		/	
	WIDTH : W mm			1140			1055		/	
	DEPTH : D mm			380			485		/	
MASS	(NET) kg(lb)			14.5 (32)			98 (216)		/	
	(GROSS) kg(lb)			18 (40)			108 (238)		/	
LAYERS LIMIT (actually)				15 (16)			1 (2)			
Operation Condition		Cool O.D(DBT)		18°C ~ 32°C			-10°C ~ 43°C			
		Heat O.D(DBT)		16°C ~ 30°C			-15°C ~ 24°C			
PIPING	PIPE DIAMETER mm (inch)		(Liquid)ø9.52(3/8) (Gas)ø15.88(5/8)			(Liquid)ø9.52(3/8) (Gas)ø15.88(5/8)				
	CONNECT METHOD, STD LENGTH m (ft)		flared type, 5.0(16.4)			flared type, 5.0(16.4)				
	PIPE LENGTH RANGE m (ft)			5 ~ 50 (16.4 ~ 164.0)					~	~
	I/D&O/D HEIGHT DIFFERENCE m (ft)		15 (OD located lower) / 30 (OD located higher) (49.2/98.4)							
	ADD GAS AMOUNT g/m (oz/ft)			50 (0.538)						
	PIPE LENGTH FOR ADDITIONAL GAS m (ft)			30 (98.4)						

*1: In case it is necessary to indicate the air □ow volume in (l/s), the value in (m^3/min.) shall be multiplied by 16.7 and rounded down the decimal point.
*2: If the EUROVENT Certi□ed models can be operated under the □extra-low□temperature condition, -7□C dry bulb and -8□C wet-bulb temperatures with rated voltage 230 V shall be used.
*3: Network Impedance shall be applicable for EUROPE and CHINA models.
*4: The annual consumption is calculated by multiplying the input power at 230 V (400 V) by an average of 500 hours per year in cooling mode.
*5: EER and COP classification is at 230 V (400 V) only in accordance with EU directive 2002/31/EC.
*6: SEER and SCOP classification is at 230V(400V) only in accordance with EN-14825. For heating, SCOP indicates the value of only Average heating season, Other fiche data indicates in an attached sheet.

Single -Type

1-1. Unit Speci□cations

PEY1

3. Wall Mounted Type S-100PK1E5A / U-100PEY1E8

INDOOR		MODEL	S-100PK1E5A							
PANEL		MODEL	-							
OUTDOOR		MODEL				U-100PEY1E8				
Branch pipe		MODEL	-							
PERFORMANCE TEST CONDITION			ISO5151 / EN14511 / EN14825 / EN12102							
POWER SUPPLY		ø, Hz	1ø 50Hz			3ø 50Hz				
		V	220	230	240	380	400	415	Min	Max
COOLING	CAPACITY	kW	9.0	9.0	9.0				2.7	9.7
		BTU/h	30700	30700	30700				9200	33100
	CURRENT	A	0.61	0.59	0.55	5.40	5.15	4.95	-	-
	INPUT POWER	W	65	65	65	3.305k	3.305k	3.305k	-	-
		TOTAL W		-		3.370k	3.370k	3.370k	530	3.800k
	ANNUAL CONSUMPTION	TOTAL kWh ※4		-		-	1685	-	-	-
	EER/EER CLASS	TOTAL(W/W) ※5/("A"~"G")	-	-	-	2.67	2.67 / D	2.67	5.09	2.55
	Erp ※6 Pdsign	kW	-	-	-	-	9.0	-		
	Erp ※6 SEER	(W/W)	-	-	-	-	5.7	-		
	Erp ※6 Annual consumption	kWh	-	-	-	-	553	-		
	Erp ※6 Class		-	-	-	-	A+	-		
	POWER FACTOR	%	-	-	-	93	93	93	-	-
	NOISE INDOOR (H/M/L)	dB-A		49/45/41			-			
		Power Level dB		66/60/55			-			
	NOISE OUTDOOR (H/L)	dB-A					54/-			
		Power Level dB					70/-			
HEATING	CAPACITY	kW	9.0	9.0	9.0				2.1	10.5
		BTU/h	30700	30700	30700				7200	35800
	CURRENT	A	0.62	0.60	0.56	3.85	3.65	3.55	-	-
	INPUT POWER	W	65	65	65	2.365k	2.365k	2.365k	-	-
		TOTAL W		-		2.430k	2.430k	2.430k	410	3.000k
	COP/COP CLASS	TOTAL(W/W) ※5/("A"~"G")	-	-	-	3.70	3.70 / A	3.70	5.12	3.50
	Erp ※6 Pdsign	kW	-	-	-	-	9.0	-		
	Erp ※6 Tbivalen	°C	-	-	-	-	-7	-		
	Erp ※6 SCOP	(W/W)	-	-	-	-	3.8	-		
	Erp ※6 Annual consumption	kWh	-	-	-	-	3316	-		
	Erp ※6 Class		-	-	-	-	A	-		
	POWER FACTOR	%	-	-	-	93	94	93	-	-
	NOISE INDOOR (H/M/L)	dB-A		49/45/41			-		/	/
		Power Level dB		66/60/55			-			
	NOISE OUTDOOR (H/L)	dB-A		-			54/-		/	/
		Power Level dB		-			70/-			
EXTRA LOW TEMP	Total CAPACITY(kW)/INPUT POWER(W)/COP		-							
MAX CURRENT(A)/MAX INPUT POWER(W)			0.62/65	0.60/65	0.56/65	9.0/5.510k	9.0/5.800k	9.0/6.020k	/	
STARTING CURRENT(A)/COMP OUTPUT(W)			-	-	-	5.40/1.7k	5.15/1.7k	4.95/1.7k	/	
NETWORK IMPEDANCE (ΩMAX.)				-			-			
FM OUTPUT (W)				47			90		/	
MOISTURE REMOVAL VOLUME		L/h(Pt/h)	5.4		(11.3)		-			
External static pressure		Pa		-						
I/D AIR FLOW	COOL	m^3/min (ft^3/min)		19/16.5/13 (671/583/459)						
	HEAT	m^3/min (ft^3/min)		19/16.5/13 (671/583/459)						
O/D AIR FLOW	COOL	m^3/min (ft^3/min)				76		(2684)		
	HEAT	m^3/min (ft^3/min)				67		(2366)		
REFRIGERANT TYPE, AMOUNT g(oz)						R410A	2.60k	(91.7)	/	
PROD	HEIGHT : H mm(inch)			300 (11-1/32)			996 (39-7/32)		/	
	WIDTH : W mm(inch)			1065 (41-23/64)			940 (37-1/32)		/	
	DEPTH : D mm(inch)			230 (9-1/32)			340 (13-13/32)		/	
PACK	HEIGHT : H mm			310			1136		/	
	WIDTH : W mm			1140			1055		/	
	DEPTH : D mm			380			485		/	
MASS	(NET) kg(lb)			14.5 (32)			73 (161)		/	
	(GROSS) kg(lb)			18 (40)			81 (179)		/	
LAYERS LIMIT (actually)				15 (16)			2 (3)			
Operation Condition		Cool O.D(DBT)		18°C ~ 32°C			-10°C ~ 43°C			
		Heat O.D(DBT)		16°C ~ 30°C			-15°C ~ 24°C			
PIPING	PIPE DIAMETER mm (inch)		(Liquid)ø9.52(3/8) (Gas)ø15.88(5/8)			(Liquid)ø9.52(3/8) (Gas)ø15.88(5/8)				
	CONNECT METHOD, STD LENGTH m (ft)		flared type, 5.0(16.4)			flared type, 5.0(16.4)				
	PIPE LENGTH RANGE m (ft)		5 ~ 50 (16.4 ~ 164.0)						~	~
	I/D&O/D HEIGHT DIFFERENCE m (ft)		15 (OD located lower) / 30 (OD located higher) (49.2/98.4)							
	ADD GAS AMOUNT g/m (oz/ft)		50 (0.538)							
	PIPE LENGTH FOR ADDITIONAL GAS m (ft)		30 (98.4)							

*1: In case it is necessary to indicate the air □ow volume in (l/s), the value in (m^3/min.) shall be multiplied by 16.7 and rounded down the decimal point.
*2: If the EUROVENT Certi□ed models can be operated under the □extra-low□temperature condition, -7□C dry bulb and -8□C wet-bulb temperatures with rated voltage 230 V shall be used.
*3: Network Impedance shall be applicable for EUROPE and CHINA models.
*4: The annual consumption is calculated by multiplying the input power at 230 V (400 V) by an average of 500 hours per year in cooling mode.
*5: EER and COP classification is at 230 V (400 V) only in accordance with EU directive 2002/31/EC.
*6: SEER and SCOP classification is at 230V(400V) only in accordance with EN-14825. For heating, SCOP indicates the value of only Average heating season, Other fiche data indicates in an attached sheet.

Simultaneous (Twin) -Type

1-1. Unit Speci□cations

PEY1

4. Low Silhouette Ducted Type S-36PF1E5A×2 / U-71PEY1E5

INDOOR		MODEL	S-36PF1E5A×2							
PANEL		MODEL	-			-				
OUTDOOR		MODEL				U-71PEY1E5				
Branch pipe		MODEL	-							
PERFORMANCE TEST CONDITION			ISO13253 / EN14511 / EN14825 / EN12102							
POWER SUPPLY		□, Hz	1□ 50Hz			1□ 50Hz				
		V	220	230	240	220	230	240	Min	Max
COOLING	CAPACITY	kW	7.1	7.1	7.1				2.0	7.7
		BTU/h	24200	24200	24200				6800	26300
	CURRENT	A	0.6×2	0.57×2	0.56×2	12.2	11.7	11.2	-	-
	INPUT POWER	W	70×2	70×2	70×2	2.450k	2.450k	2.450k	-	-
		TOTAL W	-			2.590k	2.590k	2.590k	325	3.290k
	ANNUAL CONSUMPTION	TOTAL kWh ※4	-			-	1295	-	-	-
	EER/EER CLASS	TOTAL(W/W)※5/("A"□"G")	-	-	-	2.74	2.74 / D	2.74	6.15	2.34
	Erp ※6 Pdsign	kW	-	-	-	-	7.1	-		
	Erp ※6 SEER	(W/W)	-	-	-	-	5.1	-		
	Erp ※6 Annual consumption	kWh	-	-	-	-	487	-		
	Erp ※6 Class		-	-	-	-	A	-		
	POWER FACTOR	□	-	-	-	91	91	91	-	-
	NOISE INDOOR	dB-A (H/M/L)	33/29/25							
		Power Level dB	55/51/47							
	NOISE OUTDOOR	dB-A (H/L)				50/-				
		Power Level dB				70/-				
HEATING	CAPACITY	kW	7.1	7.1	7.1				1.8	8.1
		BTU/h	24200	24200	24200				6100	27600
	CURRENT	A	0.6×2	0.57×2	0.56×2	8.30	7.90	7.60	-	-
	INPUT POWER	W	70×2	70×2	70×2	1.680k	1.680k	1.680k	-	-
		TOTAL W	-			1.820k	1.820k	1.820k	275	2.400k
	COP/COP CLASS	TOTAL(W/W)※5/("A"□"G")	-	-	-	3.90	3.90/ A	3.90	6.55	3.38
	Erp ※6 Pdsign	kW	-	-	-	5.50	5.50	5.50		
	Erp ※6 Tbivalen	°C	-	-	-	-	-7.00	-		
	Erp ※6 SCOP	(W/W)	-	-	-	-	3.80	-		
	Erp ※6 Annual consumption	kWh	-	-	-	-	2026	-		
	Erp ※6 Class		-	-	-	-	A	-		
	POWER FACTOR	□	-	-	-	92	92	92	-	-
	NOISE INDOOR	dB-A (H/M/L)	33/29/25			-			/	/
		Power Level dB	55/51/47			-				
	NOISE OUTDOOR	dB-A (H/L)	-			52/-			/	/
		Power Level dB	-			70/-				
EXTRALOW TEMP	Total CAPACITY(kW)/INPUT POWER(W)/COP		-							
MAX CURRENT(A)/MAX INPUT POWER(W)			0.86×2/105×2	0.82×2/105×2	0.79×2/105×2	18/3.64k	18/3.81k	18/3.97k	/	
STARTING CURRENT(A)/COMP OUTPUT(W)			-	-	-	12.2/2.5k	11.7/2.5k	11.2/2.5k	/	
NETWORK IMPEDANCE (ΩMAX.)			-			-				
FM OUTPUT (W)			120			90			/	
MOISTURE REMOVAL VOLUME		L/h(Pt/h)	4.2 (2.1×2) (8.8)			-				
External static pressure		Pa	70 (MIN10 - MAX150)							
I/D AIR FLOW	COOL	m^3/min (ft^3/min)	[14/13/10 (494/459/353)]×2							
	HEAT	m^3/min (ft^3/min)	[14/13/10 (494/459/353)]×2							
O/D AIR FLOW	COOL	m^3/min (ft^3/min)				39 (1377)				
	HEAT	m^3/min (ft^3/min)				39 (1377)				
REFRIGERANT TYPE, AMOUNT g(oz)						R410A 1.70k (60.0)			/	
PROD IM	HEIGHT : H mm(inch)		290 (11-13/32)			569 (22-13/32)			/	
	WIDTH : W mm(inch)		800 (31-1/2)			790 (31-7/64)			/	
	DEPTH : D mm(inch)		700 (27-9/16)			285 (11-7/32)			/	
PACK IM	HEIGHT : H mm		355			645			/	
	WIDTH : W mm		1014			921			/	
	DEPTH : D mm		850			386			/	
MASS	(NET) kg(lb)		28 (62)			42 (93)			/	
	(GROSS) kg(lb)		35 (78)			46 (101)			/	
LAYERS LIMIT (actually)			9 (10)			4 (5)				
Operation Condition		Cool (DBT)	18°C □32°C			-10°C □43°C				
		Heat (DBT)	16°C □30°C			-15°C □24°C				
PIPING	PIPE DIAMETER mm (inch)		(Liquid)□6.35(1/4) (Gas)□12.7(1/2)			(Liquid)□9.52(3/8) (Gas)□15.88(5/8)				
	CONNECT METHOD, STD LENGTH m (ft)		" ared type, 5.0(16.4)			" ared type, 5.0(16.4)				
	PIPE LENGTH RANGE m (ft)		5 □50 (16.4 □164)						□	□
	I/D&O/D HEIGHT DIFFERENCE m (ft)		15 (OD located lower) / 30 (OD located higher) (49.2/98.4)							
	ADD GAS AMOUNT g/m (oz/ft)		40 (0.430)							
	PIPE LENGTH FOR ADDITIONAL GAS m (ft)		20 (65.6)							

*1: In case it is necessary to indicate the air " ow volume in (l/s), the value in (m^3/min.) shall be multiplied by 16.7 and rounded down the decimal point.
*2: If the EUROVENT Certi"ed models can be operated under the •extra-low□temperature condition, -7°C dry bulb and -8°C wet-bulb temperatures with rated voltage 230 V shall be used.
*3: Network Impedance shall be applicable for EUROPE and CHINA models.
*4: The annual consumption is calculated by multiplying the input power at 230 V (400 V) by an average of 500 hours per year in cooling mode.
*5: EER and COP classification is at 230 V (400 V) only in accordance with EU directive 2002/31/EC.
*6: SEER and SCOP classification is at 230V(400V) only in accordance with EN-14825. For heating, SCOP indicates the value of only Average heating season, Other fiche data indicates in an attached sheet.

Simultaneous (Twin) -Type

1-1. Unit Specifications

PEY1

4. Low Silhouette Ducted Type S-50PF1E5A×2 / U-100PEY1E5

INDOOR		MODEL	S-50PF1E5A×2							
PANEL		MODEL								
OUTDOOR		MODEL				U-100PEY1E5				
Branch pipe		MODEL	CZ-P155BK1							
PERFORMANCE TEST CONDITION			ISO13253 / EN14511 / EN14825 / EN12102							
POWER SUPPLY		ø, Hz	1ø 50Hz			1ø 50Hz				
		V	220	230	240	220	230	240	Min	Max
COOLING	CAPACITY	kW	10.0	10.0	10.0				2.7	11.5
		BTU/h	34100	34100	34100				9200	39200
	CURRENT	A	0.77×2	0.74×2	0.71×2	15.1	14.5	13.9	-	-
	INPUT POWER	W	100×2	100×2	100×2	3.125k	3.125k	3.125k	-	-
		TOTAL W	-			3.325k	3.325k	3.325k	530	4.200k
	ANNUAL CONSUMPTION	TOTAL kWh ※4	-			-	1663	-	-	-
	EER/EER CLASS	TOTAL(W/W)※5("A"~"G")	-	-	-	3.01	3.01 / B	3.01	5.09	2.74
	Erp ※6 Pdsign	kW	-	-	-	-	10.0	-		
	Erp ※6 SEER	(W/W)	-	-	-	-	5.4	-		
	Erp ※6 Annual consumption	kWh	-	-	-	-	648	-		
	Erp ※6 Class		-	-	-	-	A	-		
	POWER FACTOR	%	-	-	-	94	94	94	-	-
	NOISE INDOOR (H/M/L)	dB-A	34/30/26			-				
		Power Level dB	56/52/48			-				
	NOISE OUTDOOR (H/L)	dB-A				54/-				
		Power Level dB				70/-				
HEATING	CAPACITY	kW	10.0	10.0	10.0				2.1	13.8
		BTU/h	34100	34100	34100				7200	47100
	CURRENT	A	0.77×2	0.74×2	0.71×2	11.8	11.2	10.7	-	-
	INPUT POWER	W	100×2	100×2	100×2	2.430k	2.430k	2.430k	-	-
		TOTAL W	-			2.630k	2.630k	2.630k	410	4.000k
	COP/COP CLASS	TOTAL(W/W)※5("A"~"G")	-	-	-	3.80	3.80 / A	3.80	5.12	3.45
	Erp ※6 Pdsign	kW	-	-	-	-	9.5	-		
	Erp ※6 Tbivalen	°C	-	-	-	-	-8	-		
	Erp ※6 SCOP	(W/W)	-	-	-	-	3.8	-		
	Erp ※6 Annual consumption	kWh	-	-	-	-	3500	-		
	Erp ※6 Class		-	-	-	-	A	-		
	POWER FACTOR	%	-	-	-	94	94	95	-	-
	NOISE INDOOR (H/M/L)	dB-A	34/30/26			-			/	/
		Power Level dB	56/52/48			-				
	NOISE OUTDOOR (H/L)	dB-A	-			54/-			/	/
		Power Level dB	-			70/-				
EXTRA LOW TEMP	Total CAPACITY(kW)/INPUT POWER(W)/COP		-							
MAX CURRENT(A)/MAX INPUT POWER(W)			1.00×2/125×2	0.96×2/125×2	0.92×2/125×2	25.0/5.300k	25.0/5.500k	25.0/5.700k	/	
STARTING CURRENT(A)/COMP OUTPUT(W)			-	-	-	15.1/1.7k	14.5/1.7k	13.9/1.7k	/	
NETWORK IMPEDANCE (ΩMAX.)			-			-				
FM OUTPUT (W)			120×2			90			/	
MOISTURE REMOVAL VOLUME		L/h(Pt/h)	6.0	(3.0×2)	(12.6)	-				
External static pressure		Pa	70 (MIN10 - MAX150)							
I/D AIR FLOW	COOL	m^3/min (ft^3/min)	[16/15/12 (565/530/424)]×2							
	HEAT	m^3/min (ft^3/min)	[16/15/12 (565/530/424)]×2							
O/D AIR FLOW	COOL	m^3/min (ft^3/min)				76		(2684)		
	HEAT	m^3/min (ft^3/min)				67		(2366)		
REFRIGERANT TYPE, AMOUNT g(oz)						R410A	2.60k	(91.7)	/	
PROD	HEIGHT : H mm(inch)		290 (11-13/32)			996 (39-7/32)			/	
	WIDTH : W mm(inch)		800 (31-1/2)			940 (37-1/32)			/	
	DEPTH : D mm(inch)		700 (27-9/16)			340 (13-13/32)			/	
PACK	HEIGHT : H mm		355			1136			/	
	WIDTH : W mm		1014			1055			/	
	DEPTH : D mm		850			485			/	
MASS	(NET) kg(lb)		28 (62)			73 (161)			/	
	(GROSS) kg(lb)		35 (78)			81 (179)			/	
LAYERS LIMIT (actually)			9 (10)			2 (3)				
Operation Condition		Cool O.D(DBT)	18°C ~ 32°C			-10°C ~ 43°C				
		Heat O.D(DBT)	16°C ~ 30°C			-15°C ~ 24°C				
PIPING	PIPE DIAMETER mm (inch)		(Liquid)ø6.35(1/4) (Gas)ø12.7(1/2)			(Liquid)ø9.52(3/8) (Gas)ø15.88(5/8)				
	CONNECT METHOD, STD LENGTH m (ft)		flared type, 5.0(16.4)			flared type, 5.0(16.4)				
	PIPE LENGTH RANGE m (ft)		5 ~ 50 (16.4 ~ 164.0)						~	~
	I/D&O/D HEIGHT DIFFERENCE m (ft)		15 (OD located lower) / 30 (OD located higher) (49.2/98.4)							
	ADD GAS AMOUNT g/m (oz/ft)		50 (0.538)							
	PIPE LENGTH FOR ADDITIONAL GAS m (ft)		30 (98.4)							

*1: In case it is necessary to indicate the air flow volume in (l/s), the value in (m^3/min.) shall be multiplied by 16.7 and rounded down the decimal point.
*2: If the EUROVENT Certified models can be operated under the "extra-low" temperature condition, -7°C dry bulb and -8°C wet-bulb temperatures with rated voltage 230 V shall be used.
*3: Network Impedance shall be applicable for EUROPE and CHINA models.
*4: The annual consumption is calculated by multiplying the input power at 230 V (400 V) by an average of 500 hours per year in cooling mode.
*5: EER and COP classification is at 230 V (400 V) only in accordance with EU directive 2002/31/EC.

Single-Type

1-1. Unit Speci□cations

PEY1

4. Low Silhouette Ducted Type S-60PF1E5A / U-60PEY1E5

INDOOR		MODEL	S-60PF1E5A							
PANEL		MODEL	-			-				
OUTDOOR		MODEL				U-60PEY1E5				
Branch pipe		MODEL	-							
PERFORMANCE TEST CONDITION			ISO13253 / EN14511 / EN14825 / EN12102							
POWER SUPPLY		□, Hz	1□ 50Hz			1□ 50Hz				
		V	220	230	240	220	230	240	Min	Max
COOLING	CAPACITY	kW	6.0	6.0	6.0				2.0	7.0
		BTU/h	20500	20500	20500				6800	23900
	CURRENT	A	0.91	0.89	0.87	9.00	8.65	8.30	-	-
	INPUT POWER	W	120	120	120	1.810k	1.810k	1.810k	-	-
		TOTAL W	-			1.930k	1.930k	1.930k	325	2.850k
	ANNUAL CONSUMPTION	TOTAL kWh ※4	-			965	965	965	-	-
	EER/EER CLASS	TOTAL(W/W)※5/("A"□"G")	-	-	-	3.10	3.10 / B	3.10	6.15	2.46
	Erp ※6 Pdsign	kW	-	-	-	-	6.0	-		
	Erp ※6 SEER	(W/W)	-	-	-	-	5.4	-		
	Erp ※6 Annual consumption	kWh	-	-	-	-	389	-		
	Erp ※6 Class		-	-	-	-	A	-		
	POWER FACTOR	□	-	-	-	91	91	91	-	-
	NOISE INDOOR	dB-A (H/M/L)	35/32/26							
		Power Level dB	57/54/48							
	NOISE OUTDOOR	dB-A (H/L)				46/-				
		Power Level dB				65/-				
HEATING	CAPACITY	kW	6.0	6.0	6.0				1.8	7.0
		BTU/h	20500	20500	20500				6100	23900
	CURRENT	A	0.91	0.89	0.87	6.40	6.10	5.90	-	-
	INPUT POWER	W	120	120	120	1.290k	1.290k	1.290k	-	-
		TOTAL W	-			1.410k	1.410k	1.410k	275	2.055k
	COP/COP CLASS	TOTAL(W/W)※5/("A"□"G")	-	-	-	4.25	4.25 / A	4.25	6.55	3.41
	Erp ※6 Pdsign	kW	-	-	-	-	5.0	-		
	Erp ※6 Tbivalen	°C	-	-	-	-	-9	-		
	Erp ※6 SCOP	(W/W)	-	-	-	-	3.8	-		
	Erp ※6 Annual consumption	kWh	-	-	-	-	1842	-		
	Erp ※6 Class		-	-	-	A	A	A		
	POWER FACTOR	□	-	-	-	92	92	91	-	-
	NOISE INDOOR	dB-A (H/M/L)	35/32/26			-			/	/
		Power Level dB	57/54/48			-				
	NOISE OUTDOOR	dB-A (H/L)	-			50/-			/	/
		Power Level dB	-			69/-				
EXTRALOW TEMP	Total CAPACITY(kW)/INPUT POWER(W)/COP		-							
MAX CURRENT(A)/MAX INPUT POWER(W)			1.26/160	1.20/160	1.15/160	18/3.64k	18/3.77k	18/3.93k	/	
STARTING CURRENT(A)/COMP OUTPUT(W)			-	-	-	9.00/1.8k	8.65/1.8k	8.30/1.8k	/	
NETWORK IMPEDANCE (ΩMAX.)			-			-				
FM OUTPUT (W)			120			90			/	
MOISTURE REMOVAL VOLUME		L/h(Pt/h)	3.4		(7.1)	-				
External static pressure		Pa	70 (MIN10 - MAX150)							
I/D AIR FLOW	COOL	m^3/min (ft^3/min)	21/19/15 (742/671/530)							
	HEAT	m^3/min (ft^3/min)	21/19/15 (742/671/530)							
O/D AIR FLOW	COOL	m^3/min (ft^3/min)				30		(1067)		
	HEAT	m^3/min (ft^3/min)				35		(1229)		
REFRIGERANT TYPE, AMOUNT g(oz)						R410A	1.70k	(60.0)	/	
PROD	HEIGHT : H mm(inch)		290 (11-13/32)			569 (22-13/32)			/	
	WIDTH : W mm(inch)		1000 (39-3/8)			790 (31-7/64)			/	
	DEPTH : D mm(inch)		700 (27-9/16)			285 (11-7/32)			/	
PACK	HEIGHT : H mm		355			645			/	
	WIDTH : W mm		1214			921			/	
	DEPTH : D mm		850			386			/	
MASS	(NET) kg(lb)		33 (73)			42 (93)			/	
	(GROSS) kg(lb)		41 (91)			46 (101)			/	
LAYERS LIMIT (actually)			9 (10)			4 (5)				
Operation Condition		Cool (DBT)	18°C □32°C			-10°C □43°C				
		Heat (DBT)	16°C □30°C			-15°C □24°C				
PIPING	PIPE DIAMETER mm (inch)		(Liquid)□9.52(3/8) (Gas)□15.88(5/8)			(Liquid)□9.52(3/8) (Gas)□15.88(5/8)				
	CONNECT METHOD, STD LENGTH m (ft)		" ared type, 5.0(16.4)			" ared type, 5.0(16.4)				
	PIPE LENGTH RANGE m (ft)		5 □50 (16.4 □164)						□	□
	I/D&O/D HEIGHT DIFFERENCE m (ft)		15 (OD located lower) / 30 (OD located higher) (49.2/98.4)							
	ADD GAS AMOUNT g/m (oz/ft)		40 (0.430)							
	PIPE LENGTH FOR ADDITIONAL GAS m (ft)		20 (65.6)							

*1: In case it is necessary to indicate the air " ow volume in (l/s), the value in (m^3/min.) shall be multiplied by 16.7 and rounded down the decimal point.
*2: If the EUROVENT Certi"ed models can be operated under the •extra-low□temperature condition, -7°C dry bulb and -8°C wet-bulb temperatures with rated voltage 230 V shall be used.
*3: Network Impedance shall be applicable for EUROPE and CHINA models.
*4: The annual consumption is calculated by multiplying the input power at 230 V (400 V) by an average of 500 hours per year in cooling mode.
*5: EER and COP classification is at 230 V (400 V) only in accordance with EU directive 2002/31/EC.
*6: SEER and SCOP classification is at 230V(400V) only in accordance with EN-14825. For heating, SCOP indicates the value of only Average heating season, Other fiche data indicates in an attached sheet.

Simultaneous (Twin) -Type

1-1. Unit Speci□cations

PEY1

4. Low Silhouette Ducted Type S-60PF1E5A×2 / U-125PEY1E5

INDOOR		MODEL	S-60PF1E5A×2							
PANEL		MODEL								
OUTDOOR		MODEL				U-125PEY1E5				
Branch pipe		MODEL	CZ-P155BK1							
PERFORMANCE TEST CONDITION			ISO13253 / EN14511 / EN12102							
POWER SUPPLY		ø, Hz	1ø 50Hz			1ø 50Hz				
		V	220	230	240	220	230	240	Min	Max
COOLING	CAPACITY	kW	12.5	12.5	12.5				3.8	13.5
		BTU/h	42700	42700	42700				13000	46100
	CURRENT	A	0.91×2	0.89×2	0.87×2	18.8	18.0	17.2	-	-
	INPUT POWER	W	120×2	120×2	120×2	3.885k	3.885k	3.885k	-	-
		TOTAL W		-		4.125k	4.125k	4.125k	900	5.000k
	ANNUAL CONSUMPTION	TOTAL kWh ※4		-		-	2063	-	-	-
	EER/EER CLASS	TOTAL(W/W)※5/("A"~"G")	-	-	-	3.03	3.03 / B	3.03	4.22	2.70
	Erp ※6 Pdsign	kW	-	-	-	-	-	-		
	Erp ※6 SEER	(W/W)	-	-	-	-	-	-		
	Erp ※6 Annual consumption	kWh	-	-	-	-	-	-		
	Erp ※6 Class		-	-	-	-	-	-		
	POWER FACTOR	%	-	-	-	94	94	94	-	-
	NOISE INDOOR (H/M/L)	dB-A		35/32/26			-			
		Power Level dB		57/54/48			-			
	NOISE OUTDOOR (H/L)	dB-A					56/-			
		Power Level dB					73/-			
HEATING	CAPACITY	kW	12.5	12.5	12.5				3.4	15.0
		BTU/h	42700	42700	42700				11600	51200
	CURRENT	A	0.91×2	0.89×2	0.87×2	14.6	14.0	13.4	-	-
	INPUT POWER	W	120×2	120×2	120×2	3.060k	3.060k	3.060k	-	-
		TOTAL W		-		3.300k	3.300k	3.300k	730	4.400k
	COP/COP CLASS	TOTAL(W/W)※5/("A"~"G")	-	-	-	3.79	3.79 / A	3.79	4.66	3.41
	Erp ※6 Pdsign	kW	-	-	-	-	-	-		
	Erp ※6 Tbivalen	°C	-	-	-	-	-	-		
	Erp ※6 SCOP	(W/W)	-	-	-	-	-	-		
	Erp ※6 Annual consumption	kWh	-	-	-	-	-	-		
	Erp ※6 Class		-	-	-	-	-	-		
	POWER FACTOR	%	-	-	-	95	95	95	-	-
	NOISE INDOOR (H/M/L)	dB-A		35/32/26			-		/	/
		Power Level dB		57/54/48			-			
	NOISE OUTDOOR (H/L)	dB-A		-			56/-		/	/
		Power Level dB		-			73/-			
EXTRA LOW TEMP	Total CAPACITY(kW)/INPUT POWER(W)/COP					-				
MAX CURRENT(A)/MAX INPUT POWER(W)			1.26×2/160×2	1.20×2/160×2	1.15×2/160×2	29.0/6.000k	29.0/6.300k	29.0/6.600k	/	
STARTING CURRENT(A)/COMP OUTPUT(W)			-	-	-	18.8/3.0k	18.0/3.0k	17.2/3.0k	/	
NETWORK IMPEDANCE (ΩMAX.)				-			-			
FM OUTPUT (W)				120×2			90		/	
MOISTURE REMOVAL VOLUME		L/h(Pt/h)	7.9	(3.95×2)	(16.6)		-			
External static pressure		Pa	70 (MIN10 - MAX150)							
I/D AIR FLOW	COOL	m^3/min (ft^3/min)	[21/19/15 (742/671/530)]×2							
	HEAT	m^3/min (ft^3/min)	[21/19/15 (742/671/530)]×2							
O/D AIR FLOW	COOL	m^3/min (ft^3/min)				80		(2825)		
	HEAT	m^3/min (ft^3/min)				73		(2578)		
REFRIGERANT TYPE, AMOUNT g(oz)						R410A	3.20k	(112.9)	/	
PROD	HEIGHT : H mm(inch)		290 (11-13/32)			996 (39-7/32)			/	
	WIDTH : W mm(inch)		1000 (39-3/8)			940 (37-1/32)			/	
	DEPTH : D mm(inch)		700 (27-9/16)			340 (13-13/32)			/	
PACK	HEIGHT : H mm		355			1136			/	
	WIDTH : W mm		1214			1055			/	
	DEPTH : D mm		850			485			/	
MASS	(NET) kg(lb)		33 (73)			85 (187)			/	
	(GROSS) kg(lb)		41 (91)			93 (205)			/	
LAYERS LIMIT (actually)			9 (10)			2 (3)				
Operation Condition		Cool O.D(DBT)	18°C ~ 32°C			-10°C ~ 43°C				
		Heat O.D(DBT)	16°C ~ 30°C			-15°C ~ 24°C				
PIPING	PIPE DIAMETER mm (inch)		(Liquid)ø9.52(3/8) (Gas)ø15.88(5/8)			(Liquid)ø9.52(3/8) (Gas)ø15.88(5/8)				
	CONNECT METHOD, STD LENGTH m (ft)		flared type, 5.0(16.4)			flared type, 5.0(16.4)				
	PIPE LENGTH RANGE m (ft)		5 ~ 50 (16.4 ~ 164.0)						~	~
	I/D&O/D HEIGHT DIFFERENCE m (ft)		15 (OD located lower) / 30 (OD located higher) (49.2/98.4)							
	ADD GAS AMOUNT g/m (oz/ft)		50 (0.538)							
	PIPE LENGTH FOR ADDITIONAL GAS m (ft)		30 (98.4)							

*1: In case it is necessary to indicate the air □ow volume in (l/s), the value in (m^3/min.) shall be multiplied by 16.7 and rounded down the decimal point.
*2: If the EUROVENT Certi□ed models can be operated under the □extra-low□temperature condition, -7□C dry bulb and -8□C wet-bulb temperatures with rated voltage 230 V shall be used.
*3: Network Impedance shall be applicable for EUROPE and CHINA models.
*4: The annual consumption is calculated by multiplying the input power at 230 V (400 V) by an average of 500 hours per year in cooling mode.
*5: EER and COP classification is at 230 V (400 V) only in accordance with EU directive 2002/31/EC.

Single-Type

1-1. Unit Speci□cations

PEY1

4. Low Silhouette Ducted Type S-71PF1E5A / U-71PEY1E5

INDOOR		MODEL	S-71PF1E5A							
PANEL		MODEL	-			-				
OUTDOOR		MODEL				U-71PEY1E5				
Branch pipe		MODEL	-							
PERFORMANCE TEST CONDITION			ISO13253 / EN14511 / EN14825 / EN12102							
POWER SUPPLY		□, Hz	1□ 50Hz			1□ 50Hz				
		V	220	230	240	220	230	240	Min	Max
COOLING	CAPACITY	kW	7.1	7.1	7.1				2.0	7.7
		BTU/h	24200	24200	24200				6800	26300
	CURRENT	A	0.91	0.89	0.87	12.2	11.7	11.2	-	-
	INPUT POWER	W	120	120	120	2.450k	2.450k	2.450k	-	-
		TOTAL W	-			2.570k	2.570k	2.570k	325	3.270k
	ANNUAL CONSUMPTION	TOTAL kWh ※4	-			1285	1285	1285	-	-
	EER/EER CLASS	TOTAL(W/W)※5(/("A"□"G")	-	-	-	2.76	2.76 / D	2.76	6.15	2.35
	Erp ※6 Pdsign	kW	-	-	-	-	7.1	-		
	Erp ※6 SEER	(W/W)	-	-	-	-	5.3	-		
	Erp ※6 Annual consumption	kWh	-	-	-	-	469	-		
	Erp ※6 Class		-	-	-	-	A	-		
	POWER FACTOR	□	-	-	-	91	91	91	-	-
	NOISE INDOOR	dB-A (H/M/L)	35/32/26							
		Power Level dB	57/54/48							
	NOISE OUTDOOR	dB-A (H/L)				50/-				
		Power Level dB				70/-				
HEATING	CAPACITY	kW	7.1	7.1	7.1				1.8	8.1
		BTU/h	24200	24200	24200				6100	27600
	CURRENT	A	0.91	0.89	0.87	8.30	7.90	7.60	-	-
	INPUT POWER	W	120	120	120	1.680k	1.680k	1.680k	-	-
		TOTAL W	-			1.800k	1.800k	1.800k	275	2.380k
	COP/COP CLASS	TOTAL(W/W)※5(/("A"□"G")	-	-	-	3.94	3.94 / A	3.94	6.55	3.40
	Erp ※6 Pdsign	kW	-	-	-	-	5.5	-		
	Erp ※6 Tbivalen	°C	-	-	-	-	-7	-		
	Erp ※6 SCOP	(W/W)	-	-	-	-	3.8	-		
	Erp ※6 Annual consumption	kWh	-	-	-	-	2026	-		
	Erp ※6 Class		-	-	-	-	A	-		
	POWER FACTOR	□	-	-	-	92	92	92	-	-
	NOISE INDOOR	dB-A (H/M/L)	35/32/26			-			/	/
		Power Level dB	57/54/48			-				
	NOISE OUTDOOR	dB-A (H/L)	-			52/-			/	/
		Power Level dB	-			70/-				
EXTRA LOW TEMP	Total CAPACITY(kW)/INPUT POWER(W)/COP		-							
MAX CURRENT(A)/MAX INPUT POWER(W)			1.26/160	1.20/160	1.15/160	18/3.64k	18/3.81k	18/3.97k	/	
STARTING CURRENT(A)/COMP OUTPUT(W)			-	-	-	12.2/2.5k	11.7/2.5k	11.2/2.5k	/	
NETWORK IMPEDANCE (ΩMAX.)			-			-				
FM OUTPUT (W)			120			90			/	
MOISTURE REMOVAL VOLUME		L/h(Pt/h)	4.2		(8.8)	-				
External static pressure		Pa	-							
I/D AIR FLOW	COOL	m^3/min (ft^3/min)	21/19/15 (742/671/530)							
I/D AIR FLOW	HEAT	m^3/min (ft^3/min)	21/19/15 (742/671/530)							
O/D AIR FLOW	COOL	m^3/min (ft^3/min)				39		(1377)		
O/D AIR FLOW	HEAT	m^3/min (ft^3/min)				39		(1377)		
REFRIGERANT TYPE, AMOUNT g(oz)						R410A	1.70k	(60.0)	/	
PROD IM	HEIGHT : H mm(inch)		290 (11-13/32)			569 (22-13/32)			/	
PROD IM	WIDTH : W mm(inch)		1000 (39-3/8)			790 (31-7/64)			/	
PROD IM	DEPTH : D mm(inch)		700 (27-9/16)			285 (11-7/32)			/	
PACK IM	HEIGHT : H mm		355			645			/	
PACK IM	WIDTH : W mm		1214			921			/	
PACK IM	DEPTH : D mm		850			386			/	
MASS	(NET) kg(lb)		33 (73)			42 (93)			/	
MASS	(GROSS) kg(lb)		41 (91)			46 (101)			/	
LAYERS LIMIT (actually)			9 (10)			4 (5)				
Operation Condition		Cool (DBT)	18°C □ 32°C			-10°C □ 43°C				
Operation Condition		Heat (DBT)	16°C □ 30°C			-15°C □ 24°C				
PIPING	PIPE DIAMETER mm (inch)		(Liquid)□9.52(3/8) (Gas)□15.88(5/8)			(Liquid)□9.52(3/8) (Gas)□15.88(5/8)				
PIPING	CONNECT METHOD, STD LENGTH m (ft)		" ared type, 5.0(16.4)			" ared type, 5.0(16.4)				
PIPING	PIPE LENGTH RANGE m (ft)		5 □ 50 (16.4 □ 164)						□	□
PIPING	I/D&O/D HEIGHT DIFFERENCE m (ft)		15 (OD located lower) / 30 (OD located higher) (49.2/98.4)							
PIPING	ADD GAS AMOUNT g/m (oz/ft)		40 (0.430)							
PIPING	PIPE LENGTH FOR ADDITIONAL GAS m (ft)		20 (65.6)							

*1: In case it is necessary to indicate the air " ow volume in (l/s), the value in (m^3/min.) shall be multiplied by 16.7 and rounded down the decimal point.
*2: If the EUROVENT Certi"ed models can be operated under the •extra-low□temperature condition, -7°C dry bulb and -8°C wet-bulb temperatures with rated voltage 230 V shall be used.
*3: Network Impedance shall be applicable for EUROPE and CHINA models.
*4: The annual consumption is calculated by multiplying the input power at 230 V (400 V) by an average of 500 hours per year in cooling mode.
*5: EER and COP classification is at 230 V (400 V) only in accordance with EU directive 2002/31/EC.
*6: SEER and SCOP classification is at 230V(400V) only in accordance with EN-14825. For heating, SCOP indicates the value of only Average heating season, Other fiche data indicates in an attached sheet.

Single -Type

1-1. Unit Speci□cations

PEY1

4. Low Silhouette Ducted Type S-100PF1E5A / U-100PEY1E5

INDOOR		MODEL	S-100PF1E5A							
PANEL		MODEL								
OUTDOOR		MODEL				U-100PEY1E5				
Branch pipe		MODEL	-							
PERFORMANCE TEST CONDITION			ISO13253 / EN14511 / EN14825 / EN12102							
POWER SUPPLY		ø, Hz	1ø 50Hz			1ø 50Hz				
		V	220	230	240	220	230	240	Min	Max
COOLING	CAPACITY	kW	10.0	10.0	10.0				2.7	11.5
		BTU/h	34100	34100	34100				9200	39200
	CURRENT	A	1.35	1.30	1.27	15.1	14.5	13.9	-	-
	INPUT POWER	W	195	195	195	3.125k	3.125k	3.125k	-	-
		TOTAL W		-		3.320k	3.320k	3.320k	530	4.200k
	ANNUAL CONSUMPTION	TOTAL kWh ※4		-		-	1660	-	-	-
	EER/EER CLASS	TOTAL(W/W)※5("A"~"G")	-	-	-	3.01	3.01 / B	3.01	5.09	2.74
	Erp ※6 Pdsign	kW	-	-	-	-	10.0	-		
	Erp ※6 SEER	(W/W)	-	-	-	-	5.4	-		
	Erp ※6 Annual consumption	kWh	-	-	-	-	648	-		
	Erp ※6 Class		-	-	-	-	A	-		
	POWER FACTOR	%	-	-	-	94	94	94	-	-
	NOISE INDOOR (H/M/L)	dB-A		38/34/31			-			
		Power Level dB		60/56/53			-			
	NOISE OUTDOOR (H/L)	dB-A					54/-			
		Power Level dB					70/-			
HEATING	CAPACITY	kW	10.0	10.0	10.0				2.1	13.8
		BTU/h	34100	34100	34100				7200	47100
	CURRENT	A	1.37	1.34	1.29	11.8	11.2	10.7	-	-
	INPUT POWER	W	200	200	200	2.430k	2.430k	2.430k	-	-
		TOTAL W		-		2.630k	2.630k	2.630k	410	4.000k
	COP/COP CLASS	TOTAL(W/W)※5("A"~"G")	-	-	-	3.80	3.80 / A	3.80	5.12	3.45
	Erp ※6 Pdsign	kW	-	-	-	-	9.5	-		
	Erp ※6 Tbivalen	°C	-	-	-	-	-8	-		
	Erp ※6 SCOP	(W/W)	-	-	-	-	3.8	-		
	Erp ※6 Annual consumption	kWh	-	-	-	-	3500	-		
	Erp ※6 Class		-	-	-	-	A	-		
	POWER FACTOR	%	-	-	-	94	94	95	-	-
	NOISE INDOOR (H/M/L)	dB-A		38/34/31			-		/	/
		Power Level dB		60/56/53			-			
	NOISE OUTDOOR (H/L)	dB-A		-			54/-		/	/
		Power Level dB		-			70/-			
EXTRA LOW TEMP	Total CAPACITY(kW)/INPUT POWER(W)/COP					-				
MAX CURRENT(A)/MAX INPUT POWER(W)			1.80/265	1.75/265	1.70/265	25.0/5.300k	25.0/5.500k	25.0/5.700k	/	
STARTING CURRENT(A)/COMP OUTPUT(W)			-	-	-	15.1/1.7k	14.5/1.7k	13.9/1.7k	/	
NETWORK IMPEDANCE (ΩMAX.)				-			-			
FM OUTPUT (W)				200			90		/	
MOISTURE REMOVAL VOLUME		L/h(Pt/h)	6.0		(12.6)		-			
External static pressure		Pa	100 (MIN10 - MAX150)							
I/D AIR FLOW	COOL	m^3/min (ft^3/min)	32/26/21 (1130/918/742)							
	HEAT	m^3/min (ft^3/min)	32/26/21 (1130/918/742)							
O/D AIR FLOW	COOL	m^3/min (ft^3/min)				76		(2684)		
	HEAT	m^3/min (ft^3/min)				67		(2366)		
REFRIGERANT TYPE, AMOUNT g(oz)						R410A	2.60k	(91.7)	/	
PROD	HEIGHT : H mm(inch)		290 (11-13/32)			996 (39-7/32)			/	
	WIDTH : W mm(inch)		1400 (55-1/8)			940 (37-1/32)			/	
	DEPTH : D mm(inch)		700 (27-9/16)			340 (13-13/32)			/	
PACK	HEIGHT : H mm		355			1136			/	
	WIDTH : W mm		1614			1055			/	
	DEPTH : D mm		850			485			/	
MASS	(NET) kg(lb)		45 (99)			73 (161)			/	
	(GROSS) kg(lb)		54 (119)			81 (179)			/	
LAYERS LIMIT (actually)			9 (10)			2 (3)				
Operation Condition		Cool O.D(DBT)	18°C ~ 32°C			-10°C ~ 43°C				
		Heat O.D(DBT)	16°C ~ 30°C			-15°C ~ 24°C				
PIPING	PIPE DIAMETER mm (inch)		(Liquid)ø9.52(3/8) (Gas)ø15.88(5/8)			(Liquid)ø9.52(3/8) (Gas)ø15.88(5/8)				
	CONNECT METHOD, STD LENGTH m (ft)		flared type, 5.0(16.4)			flared type, 5.0(16.4)				
	PIPE LENGTH RANGE m (ft)		5 ~ 50 (16.4 ~ 164.0)						~	~
	I/D&O/D HEIGHT DIFFERENCE m (ft)		15 (OD located lower) / 30 (OD located higher) (49.2/98.4)							
	ADD GAS AMOUNT g/m (oz/ft)		50 (0.538)							
	PIPE LENGTH FOR ADDITIONAL GAS m (ft)		30 (98.4)							

*1: In case it is necessary to indicate the air □ow volume in (l/s), the value in (m^3/min.) shall be multiplied by 16.7 and rounded down the decimal point.
*2: If the EUROVENT Certi□ed models can be operated under the □extra-low□temperature condition, -7□C dry bulb and -8□C wet-bulb temperatures with rated voltage 230 V shall be used.
*3: Network Impedance shall be applicable for EUROPE and CHINA models.
*4: The annual consumption is calculated by multiplying the input power at 230 V (400 V) by an average of 500 hours per year in cooling mode.
*5: EER and COP classification is at 230 V (400 V) only in accordance with EU directive 2002/31/EC.

Single -Type

1-1. Unit Speci□cations

PEY1

4. Low Silhouette Ducted Type S-125PF1E5A / U-125PEY1E5

INDOOR		MODEL	S-125PF1E5A							
PANEL		MODEL								
OUTDOOR		MODEL				U-125PEY1E5				
Branch pipe		MODEL	-							
PERFORMANCE TEST CONDITION			ISO13253 / EN14511 / EN12102							
POWER SUPPLY		ø, Hz	1ø 50Hz			1ø 50Hz				
		V	220	230	240	220	230	240	Min	Max
COOLING	CAPACITY	kW	12.5	12.5	12.5				3.8	13.5
		BTU/h	42700	42700	42700				13000	46100
	CURRENT	A	1.48	1.44	1.39	18.8	18.0	17.2	-	-
	INPUT POWER	W	215	215	215	3.885k	3.885k	3.885k	-	-
		TOTAL W		-		4.100k	4.100k	4.100k	900	5.000k
	ANNUAL CONSUMPTION	TOTAL kWh ※4		-		-	2050	-	-	-
	EER/EER CLASS	TOTAL(W/W)※5("A"~"G")	-	-	-	3.05	3.05 / B	3.05	4.22	2.70
	Erp ※6 Pdsign	kW	-	-	-	-	-	-		
	Erp ※6 SEER	(W/W)	-	-	-	-	-	-		
	Erp ※6 Annual consumption	kWh	-	-	-	-	-	-		
	Erp ※6 Class		-	-	-	-	-	-		
	POWER FACTOR	%	-	-	-	94	94	94	-	-
	NOISE INDOOR (H/M/L)	dB-A		39/35/32			-			
		Power Level dB		61/57/54			-			
	NOISE OUTDOOR (H/L)	dB-A					56/-			
		Power Level dB					73/-			
HEATING	CAPACITY	kW	12.5	12.5	12.5				3.4	15.0
		BTU/h	42700	42700	42700				11600	51200
	CURRENT	A	1.46	1.42	1.38	14.6	14.0	13.4	-	-
	INPUT POWER	W	210	210	210	3.060k	3.060k	3.060k	-	-
		TOTAL W		-		3.270k	3.270k	3.270k	730	4.400k
	COP/COP CLASS	TOTAL(W/W)※5("A"~"G")	-	-	-	3.82	3.82 / A	3.82	4.66	3.41
	Erp ※6 Pdsign	kW	-	-	-	-	-	-		
	Erp ※6 Tbivalen	°C	-	-	-	-	-	-		
	Erp ※6 SCOP	(W/W)	-	-	-	-	-	-		
	Erp ※6 Annual consumption	kWh	-	-	-	-	-	-		
	Erp ※6 Class		-	-	-	-	-	-		
	POWER FACTOR	%	-	-	-	95	95	95	-	-
	NOISE INDOOR (H/M/L)	dB-A		39/35/32			-		/	/
		Power Level dB		61/57/54			-			
	NOISE OUTDOOR (H/L)	dB-A		-			56/-		/	/
		Power Level dB		-			73/-			
EXTRA LOW TEMP	Total CAPACITY(kW)/INPUT POWER(W)/COP					-				
MAX CURRENT(A)/MAX INPUT POWER(W)			1.80/265	1.75/265	1.70/265	29.0/6.000k	29.0/6.300k	29.0/6.600k	/	
STARTING CURRENT(A)/COMP OUTPUT(W)			-	-	-	18.8/3.0k	18.0/3.0k	17.2/3.0k	/	
NETWORK IMPEDANCE (ΩMAX.)				-			-			
FM OUTPUT (W)				200			90		/	
MOISTURE REMOVAL VOLUME		L/h(Pt/h)	7.9		(16.6)		-			
External static pressure		Pa	100 (MIN10 - MAX150)							
I/D AIR FLOW	COOL	m^3/min (ft^3/min)	34/29/23 (1201/1024/812)							
	HEAT	m^3/min (ft^3/min)	34/29/23 (1201/1024/812)							
O/D AIR FLOW	COOL	m^3/min (ft^3/min)				80		(2825)		
	HEAT	m^3/min (ft^3/min)				73		(2578)		
REFRIGERANT TYPE, AMOUNT g(oz)						R410A	3.20k	(112.9)	/	
PROD	HEIGHT : H mm(inch)		290 (11-13/32)			996 (39-7/32)			/	
	WIDTH : W mm(inch)		1400 (55-1/8)			940 (37-1/32)			/	
	DEPTH : D mm(inch)		700 (27-9/16)			340 (13-13/32)			/	
PACK	HEIGHT : H mm		355			1136			/	
	WIDTH : W mm		1614			1055			/	
	DEPTH : D mm		850			485			/	
MASS	(NET) kg(lb)		45 (99)			85 (187)			/	
	(GROSS) kg(lb)		54 (119)			93 (205)			/	
LAYERS LIMIT (actually)			9 (10)			2 (3)				
Operation Condition		Cool O.D(DBT)	18°C ~ 32°C			-10°C ~ 43°C				
		Heat O.D(DBT)	16°C ~ 30°C			-15°C ~ 24°C				
PIPING	PIPE DIAMETER mm (inch)		(Liquid)ø9.52(3/8) (Gas)ø15.88(5/8)			(Liquid)ø9.52(3/8) (Gas)ø15.88(5/8)				
	CONNECT METHOD, STD LENGTH m (ft)		flared type, 5.0(16.4)			flared type, 5.0(16.4)				
	PIPE LENGTH RANGE m (ft)		5 ~ 50 (16.4 ~ 164.0)						~	~
	I/D&O/D HEIGHT DIFFERENCE m (ft)		15 (OD located lower) / 30 (OD located higher) (49.2/98.4)							
	ADD GAS AMOUNT g/m (oz/ft)		50 (0.538)							
	PIPE LENGTH FOR ADDITIONAL GAS m (ft)		30 (98.4)							

*1: In case it is necessary to indicate the air □ow volume in (l/s), the value in (m^3/min.) shall be multiplied by 16.7 and rounded down the decimal point.
*2: If the EUROVENT Certi□ed models can be operated under the □extra-low□temperature condition, -7□C dry bulb and -8□C wet-bulb temperatures with rated voltage 230 V shall be used.
*3: Network Impedance shall be applicable for EUROPE and CHINA models.
*4: The annual consumption is calculated by multiplying the input power at 230 V (400 V) by an average of 500 hours per year in cooling mode.
*5: EER and COP classification is at 230 V (400 V) only in accordance with EU directive 2002/31/EC.

Simultaneous (Twin) -Type

1-1. Unit Specifications

PEY1

4. Low Silhouette Ducted Type S-50PF1E5A×2 / U-100PEY1E8

INDOOR		MODEL	S-50PF1E5A×2							
PANEL		MODEL								
OUTDOOR		MODEL				U-100PEY1E8				
Branch pipe		MODEL	CZ-P155BK1							
PERFORMANCE TEST CONDITION			ISO13253 / EN14511 / EN14825 / EN12102							
POWER SUPPLY		ø, Hz	1ø 50Hz			3ø 50Hz				
		V	220	230	240	380	400	415	Min	Max
COOLING	CAPACITY	kW	10.0	10.0	10.0				2.7	11.5
		BTU/h	34100	34100	34100				9200	39200
	CURRENT	A	0.77×2	0.74×2	0.71×2	5.10	4.85	4.70	-	-
	INPUT POWER	W	100×2	100×2	100×2	3.125k	3.125k	3.125k	-	-
		TOTAL W		-		3.325k	3.325k	3.325k	530	4.200k
	ANNUAL CONSUMPTION	TOTAL kWh ※4		-		-	1663	-	-	-
	EER/EER CLASS	TOTAL(W/W)※5("A"~"G")	-	-	-	3.01	3.01 / B	3.01	5.09	2.74
	Erp ※6 Pdsign	kW	-	-	-	-	10.0	-		
	Erp ※6 SEER	(W/W)	-	-	-	-	5.2	-		
	Erp ※6 Annual consumption	kWh	-	-	-	-	673	-		
	Erp ※6 Class		-	-	-	-	A	-		
	POWER FACTOR	%	-	-	-	93	93	93	-	-
	NOISE INDOOR (H/M/L)	dB-A		34/30/26			-			
		Power Level dB		56/52/48			-			
	NOISE OUTDOOR (H/L)	dB-A					54/-			
		Power Level dB					70/-			
HEATING	CAPACITY	kW	10.0	10.0	10.0				2.1	13.8
		BTU/h	34100	34100	34100				7200	47100
	CURRENT	A	0.77×2	0.74×2	0.71×2	4.05	3.80	3.65	-	-
	INPUT POWER	W	100×2	100×2	100×2	2.430k	2.430k	2.430k	-	-
		TOTAL W		-		2.630k	2.630k	2.630k	410	4.000k
	COP/COP CLASS	TOTAL(W/W)※5("A"~"G")	-	-	-	3.80	3.80 / A	3.80	5.12	3.45
	Erp ※6 Pdsign	kW	-	-	-	-	9.5	-		
	Erp ※6 Tbivalen	°C	-	-	-	-	-8	-		
	Erp ※6 SCOP	(W/W)	-	-	-	-	3.8	-		
	Erp ※6 Annual consumption	kWh	-	-	-	-	3500	-		
	Erp ※6 Class		-	-	-	-	A	-		
	POWER FACTOR	%	-	-	-	91	92	93	-	-
	NOISE INDOOR (H/M/L)	dB-A		34/30/26			-		/	/
		Power Level dB		56/52/48			-			
	NOISE OUTDOOR (H/L)	dB-A		-			54/-		/	/
		Power Level dB		-			70/-			
EXTRA LOW TEMP	Total CAPACITY(kW)/INPUT POWER(W)/COP					-				
MAX CURRENT(A)/MAX INPUT POWER(W)			1.00×2/125×2	0.96×2/125×2	0.92×2/125×2	9.0/5.550k	9.0/5.800k	9.0/6.050k	/	
STARTING CURRENT(A)/COMP OUTPUT(W)			-	-	-	5.10/1.7k	4.85/1.7k	4.70/1.7k	/	
NETWORK IMPEDANCE (ΩMAX.)				-			-			
FM OUTPUT (W)				120×2			90		/	
MOISTURE REMOVAL VOLUME		L/h(Pt/h)	6.0	(3.0×2)	(12.6)		-			
External static pressure		Pa	70 (MIN10 - MAX150)							
I/D AIR FLOW	COOL	m^3/min (ft^3/min)	[16/15/12 (565/530/424)]×2							
	HEAT	m^3/min (ft^3/min)	[16/15/12 (565/530/424)]×2							
O/D AIR FLOW	COOL	m^3/min (ft^3/min)				76		(2684)		
	HEAT	m^3/min (ft^3/min)				67		(2366)		
REFRIGERANT TYPE, AMOUNT g(oz)						R410A	2.60k	(91.7)	/	
PROD	HEIGHT : H mm(inch)		290 (11-13/32)			996 (39-7/32)			/	
	WIDTH : W mm(inch)		800 (31-1/2)			940 (37-1/32)			/	
	DEPTH : D mm(inch)		700 (27-9/16)			340 (13-13/32)			/	
PACK	HEIGHT : H mm		355			1136			/	
	WIDTH : W mm		1014			1055			/	
	DEPTH : D mm		850			485			/	
MASS	(NET) kg(lb)		28 (62)			73 (161)			/	
	(GROSS) kg(lb)		35 (78)			81 (179)			/	
LAYERS LIMIT (actually)			9 (10)			2 (3)				
Operation Condition		Cool O.D(DBT)	18°C ~ 32°C			-10°C ~ 43°C				
		Heat O.D(DBT)	16°C ~ 30°C			-15°C ~ 24°C				
PIPING	PIPE DIAMETER mm (inch)		(Liquid)ø6.35(1/4) (Gas)ø12.7(1/2)			(Liquid)ø9.52(3/8) (Gas)ø15.88(5/8)				
	CONNECT METHOD, STD LENGTH m (ft)		flared type, 5.0(16.4)			flared type, 5.0(16.4)				
	PIPE LENGTH RANGE m (ft)		5 ~ 50 (16.4 ~ 164.0)						~	~
	I/D&O/D HEIGHT DIFFERENCE m (ft)		15 (OD located lower) / 30 (OD located higher) (49.2/98.4)							
	ADD GAS AMOUNT g/m (oz/ft)		50 (0.538)							
	PIPE LENGTH FOR ADDITIONAL GAS m (ft)		30 (98.4)							

*1: In case it is necessary to indicate the air flow volume in (l/s), the value in (m^3/min.) shall be multiplied by 16.7 and rounded down the decimal point.
*2: If the EUROVENT Certified models can be operated under the "extra-low" temperature condition, -7°C dry bulb and -8°C wet-bulb temperatures with rated voltage 230 V shall be used.
*3: Network Impedance shall be applicable for EUROPE and CHINA models.
*4: The annual consumption is calculated by multiplying the input power at 230 V (400 V) by an average of 500 hours per year in cooling mode.
*5: EER and COP classification is at 230 V (400 V) only in accordance with EU directive 2002/31/EC.

Simultaneous (Twin) -Type

1-1. Unit Speci□cations

PEY1

4. Low Silhouette Ducted Type S-60PF1E5A×2 / U-125PEY1E8

INDOOR		MODEL	S-60PF1E5A×2							
PANEL		MODEL								
OUTDOOR		MODEL				U-125PEY1E8				
Branch pipe		MODEL	CZ-P155BK1							
PERFORMANCE TEST CONDITION			ISO13253 / EN14511 / EN12102							
POWER SUPPLY		ø, Hz	1ø 50Hz			3ø 50Hz				
		V	220	230	240	380	400	415	Min	Max
COOLING	CAPACITY	kW	12.5	12.5	12.5				3.8	13.5
		BTU/h	42700	42700	42700				13000	46100
	CURRENT	A	0.91×2	0.89×2	0.87×2	6.20	5.90	5.70	-	-
	INPUT POWER	W	120×2	120×2	120×2	3.885k	3.885k	3.885k	-	-
		TOTAL W		-		4.125k	4.125k	4.125k	900	5.000k
	ANNUAL CONSUMPTION	TOTAL kWh ※4		-		-	2063	-	-	-
	EER/EER CLASS	TOTAL(W/W)※5("A"~"G")	-	-	-	3.03	3.03 / B	3.03	4.22	2.70
	Erp ※6 Pdsign	kW	-	-	-	-	-	-		
	Erp ※6 SEER	(W/W)	-	-	-	-	-	-		
	Erp ※6 Annual consumption	kWh	-	-	-	-	-	-		
	Erp ※6 Class		-	-	-	-	-	-		
	POWER FACTOR	%	-	-	-	95	95	95	-	-
	NOISE INDOOR (H/M/L)	dB-A		35/32/26			-			
		Power Level dB		57/54/48			-			
	NOISE OUTDOOR (H/L)	dB-A					56/-			
		Power Level dB					73/-			
HEATING	CAPACITY	kW	12.5	12.5	12.5				3.4	15.0
		BTU/h	42700	42700	42700				11600	51200
	CURRENT	A	0.91×2	0.89×2	0.87×2	4.90	4.65	4.50	-	-
	INPUT POWER	W	120×2	120×2	120×2	3.060k	3.060k	3.060k	-	-
		TOTAL W		-		3.300k	3.300k	3.300k	730	4.400k
	COP/COP CLASS	TOTAL(W/W)※5("A"~"G")	-	-	-	3.79	3.79 / A	3.79	4.66	3.41
	Erp ※6 Pdsign	kW	-	-	-	-	-	-		
	Erp ※6 Tbivalen	°C	-	-	-	-	-	-		
	Erp ※6 SCOP	(W/W)	-	-	-	-	-	-		
	Erp ※6 Annual consumption	kWh	-	-	-	-	-	-		
	Erp ※6 Class		-	-	-	-	-	-		
	POWER FACTOR	%	-	-	-	95	95	95	-	-
	NOISE INDOOR (H/M/L)	dB-A		35/32/26			-		/	/
		Power Level dB		57/54/48			-			
	NOISE OUTDOOR (H/L)	dB-A		-			56/-		/	/
		Power Level dB		-			73/-			
EXTRA LOW TEMP	Total CAPACITY(kW)/INPUT POWER(W)/COP					-				
MAX CURRENT(A)/MAX INPUT POWER(W)			1.26×2/160×2	1.20×2/160×2	1.15×2/160×2	10.0/6.200k	10.0/6.500k	10.0/6.750k	/	
STARTING CURRENT(A)/COMP OUTPUT(W)			-	-	-	6.20/3.0k	5.90/3.0k	5.70/3.0k	/	
NETWORK IMPEDANCE (ΩMAX.)				-			-			
FM OUTPUT (W)				120×2			90		/	
MOISTURE REMOVAL VOLUME		L/h(Pt/h)	7.9	(3.95×2)	(16.6)		-			
External static pressure		Pa	70 (MIN10 - MAX150)							
I/D AIR FLOW	COOL	m^3/min (ft^3/min)	[21/19/15 (742/671/530)]×2							
	HEAT	m^3/min (ft^3/min)	[21/19/15 (742/671/530)]×2							
O/D AIR FLOW	COOL	m^3/min (ft^3/min)				80		(2825)		
	HEAT	m^3/min (ft^3/min)				73		(2578)		
REFRIGERANT TYPE, AMOUNT g(oz)						R410A	3.20k	(112.9)	/	
PROD	HEIGHT : H mm(inch)		290 (11-13/32)			996 (39-7/32)			/	
	WIDTH : W mm(inch)		1000 (39-3/8)			940 (37-1/32)			/	
	DEPTH : D mm(inch)		700 (27-9/16)			340 (13-13/32)			/	
PACK	HEIGHT : H mm		355			1136			/	
	WIDTH : W mm		1214			1055			/	
	DEPTH : D mm		850			485			/	
MASS	(NET) kg(lb)		33 (73)			85 (187)			/	
	(GROSS) kg(lb)		41 (91)			93 (205)			/	
LAYERS LIMIT (actually)			9 (10)			2 (3)				
Operation Condition		Cool O.D(DBT)	18°C ~ 32°C			-10°C ~ 43°C				
		Heat O.D(DBT)	16°C ~ 30°C			-15°C ~ 24°C				
PIPING	PIPE DIAMETER mm (inch)		(Liquid)ø9.52(3/8) (Gas)ø15.88(5/8)			(Liquid)ø9.52(3/8) (Gas)ø15.88(5/8)				
	CONNECT METHOD, STD LENGTH m (ft)		flared type, 5.0(16.4)			flared type, 5.0(16.4)				
	PIPE LENGTH RANGE m (ft)		5 ~ 50 (16.4 ~ 164.0)						~	~
	I/D&O/D HEIGHT DIFFERENCE m (ft)		15 (OD located lower) / 30 (OD located higher) (49.2/98.4)							
	ADD GAS AMOUNT g/m (oz/ft)		50 (0.538)							
	PIPE LENGTH FOR ADDITIONAL GAS m (ft)		30 (98.4)							

*1: In case it is necessary to indicate the air □ow volume in (l/s), the value in (m^3/min.) shall be multiplied by 16.7 and rounded down the decimal point.
*2: If the EUROVENT Certi□ed models can be operated under the □extra-low□temperature condition, -7□C dry bulb and -8□C wet-bulb temperatures with rated voltage 230 V shall be used.
*3: Network Impedance shall be applicable for EUROPE and CHINA models.
*4: The annual consumption is calculated by multiplying the input power at 230 V (400 V) by an average of 500 hours per year in cooling mode.
*5: EER and COP classification is at 230 V (400 V) only in accordance with EU directive 2002/31/EC.

Simultaneous (Twin) -Type

1-1. Unit Speci□cations

PEY1

4. Low Silhouette Ducted Type S-71PF1E5A×2 / U-140PEY1E8

INDOOR		MODEL	S-71PF1E5A×2							
PANEL		MODEL								
OUTDOOR		MODEL				U-140PEY1E8				
Branch pipe		MODEL	CZ-P155BK1							
PERFORMANCE TEST CONDITION			ISO13253 / EN14511 / EN12102							
POWER SUPPLY		ø, Hz	1ø 50Hz			3ø 50Hz				
		V	220	230	240	380	400	415	Min	Max
COOLING	CAPACITY	kW	14.0	14.0	14.0				3.3	15.5
		BTU/h	47800	47800	47800				11300	52900
	CURRENT	A	0.91×2	0.89×2	0.87×2	6.75	6.45	6.25	-	-
	INPUT POWER	W	120×2	120×2	120×2	4.125k	4.125k	4.125k	-	-
		TOTAL W		-		4.365k	4.365k	4.365k	840	6.000k
	ANNUAL CONSUMPTION	TOTAL kWh ※4		-		-	2183	-	-	-
	EER/EER CLASS	TOTAL(W/W) ※5/("A"~"G")	-	-	-	3.21	3.21 / A	3.21	3.93	2.58
	Erp ※6 Pdsign	kW	-	-	-	-	-	-		
	Erp ※6 SEER	(W/W)	-	-	-	-	-	-		
	Erp ※6 Annual consumption	kWh	-	-	-	-	-	-		
	Erp ※6 Class		-	-	-	-	-	-		
	POWER FACTOR	%	-	-	-	93	92	92	-	-
	NOISE INDOOR (H/M/L)	dB-A		35/32/26			-			
		Power Level dB		57/54/48			-			
	NOISE OUTDOOR (H/L)	dB-A					54/-			
		Power Level dB					71/-			
HEATING	CAPACITY	kW	14.0	14.0	14.0				4.1	16.0
		BTU/h	47800	47800	47800				14000	54600
	CURRENT	A	0.91×2	0.89×2	0.87×2	5.60	5.40	5.20	-	-
	INPUT POWER	W	120×2	120×2	120×2	3.355k	3.355k	3.355k	-	-
		TOTAL W		-		3.595k	3.595k	3.595k	900	5.200k
	COP/COP CLASS	TOTAL(W/W) ※5/("A"~"G")	-	-	-	3.89	3.89 / A	3.89	4.56	3.08
	Erp ※6 Pdsign	kW	-	-	-	-	-	-		
	Erp ※6 Tbivalen	°C	-	-	-	-	-	-		
	Erp ※6 SCOP	(W/W)	-	-	-	-	-	-		
	Erp ※6 Annual consumption	kWh	-	-	-	-	-	-		
	Erp ※6 Class		-	-	-	-	-	-		
	POWER FACTOR	%	-	-	-	91	90	90	-	-
	NOISE INDOOR (H/M/L)	dB-A		35/32/26			-		/	/
		Power Level dB		57/54/48			-			
	NOISE OUTDOOR (H/L)	dB-A		-			53/-		/	/
		Power Level dB		-			70/-			
EXTRA LOW TEMP	Total CAPACITY(kW)/INPUT POWER(W)/COP			-						
MAX CURRENT(A)/MAX INPUT POWER(W)			1.26×2/160×2	1.20×2/160×2	1.15×2/160×2	10.0/6.200k	10.0/6.500k	10.0/6.750k	/	
STARTING CURRENT(A)/COMP OUTPUT(W)			-	-	-	6.75/3.0k	6.45/3.0k	6.25/3.0k	/	
NETWORK IMPEDANCE (ΩMAX.)				-			-			
FM OUTPUT (W)				120			90×2		/	
MOISTURE REMOVAL VOLUME		L/h(Pt/h)	9.0	(4.5×2)	(18.9)		-			
External static pressure		Pa	70 (MIN10 - MAX150)							
I/D AIR FLOW	COOL	m^3/min (ft^3/min)	[21/19/15 (742/671/530)]×2							
	HEAT	m^3/min (ft^3/min)	[21/19/15 (742/671/530)]×2							
O/D AIR FLOW	COOL	m^3/min (ft^3/min)				135		(4767)		
	HEAT	m^3/min (ft^3/min)				120		(4238)		
REFRIGERANT TYPE, AMOUNT g(oz)						R410A	3.40k	(119.9)	/	
PROD	HEIGHT : H mm(inch)		290 (11-13/32)			1416 (55-3/4)			/	
	WIDTH : W mm(inch)		1000 (39-3/8)			940 (37-1/32)			/	
	DEPTH : D mm(inch)		700 (27-9/16)			340 (13-13/32)			/	
PACK	HEIGHT : H mm		355			1556			/	
	WIDTH : W mm		1214			1055			/	
	DEPTH : D mm		850			485			/	
MASS	(NET) kg(lb)		33 (73)			98 (216)			/	
	(GROSS) kg(lb)		41 (91)			108 (238)			/	
LAYERS LIMIT (actually)			9 (10)			1 (2)				
Operation Condition		Cool O.D(DBT)	18°C ~ 32°C			-10°C ~ 43°C				
		Heat O.D(DBT)	16°C ~ 30°C			-15°C ~ 24°C				
PIPING	PIPE DIAMETER mm (inch)		(Liquid)ø9.52(3/8) (Gas)ø15.88(5/8)			(Liquid)ø9.52(3/8) (Gas)ø15.88(5/8)				
	CONNECT METHOD, STD LENGTH m (ft)		flared type, 5.0(16.4)			flared type, 5.0(16.4)				
	PIPE LENGTH RANGE m (ft)		5 ~ 50 (16.4 ~ 164.0)						~	~
	I/D&O/D HEIGHT DIFFERENCE m (ft)		15 (OD located lower) / 30 (OD located higher) (49.2/98.4)							
	ADD GAS AMOUNT g/m (oz/ft)		50 (0.538)							
	PIPE LENGTH FOR ADDITIONAL GAS m (ft)		30 (98.4)							

*1: In case it is necessary to indicate the air □ow volume in (l/s), the value in (m^3/min.) shall be multiplied by 16.7 and rounded down the decimal point.
*2: If the EUROVENT Certi□ed models can be operated under the □extra-low□temperature condition, -7□C dry bulb and -8□C wet-bulb temperatures with rated voltage 230 V shall be used.
*3: Network Impedance shall be applicable for EUROPE and CHINA models.
*4: The annual consumption is calculated by multiplying the input power at 230 V (400 V) by an average of 500 hours per year in cooling mode.
*5: EER and COP classification is at 230 V (400 V) only in accordance with EU directive 2002/31/EC.
*6: SEER and SCOP classification is at 230V(400V) only in accordance with EN-14825. For heating, SCOP indicates the value of only Average heating season, Other fiche data indicates in an attached sheet.

Single -Type

1-1. Unit Speci□cations

PEY1

4. Low Silhouette Ducted Type S-100PF1E5A / U-100PEY1E8

INDOOR		MODEL	S-100PF1E5A							
PANEL		MODEL								
OUTDOOR		MODEL				U-100PEY1E8				
Branch pipe		MODEL	-							
PERFORMANCE TEST CONDITION			ISO13253 / EN14511 / EN14825 / EN12102							
POWER SUPPLY		ø, Hz	1ø 50Hz			3ø 50Hz				
		V	220	230	240	380	400	415	Min	Max
COOLING	CAPACITY	kW	10.0	10.0	10.0				2.7	11.5
		BTU/h	34100	34100	34100				9200	39200
	CURRENT	A	1.35	1.30	1.27	5.10	4.85	4.70	-	-
	INPUT POWER	W	195	195	195	3.125k	3.125k	3.125k	-	-
		TOTAL W		-		3.320k	3.320k	3.320k	530	4.200k
	ANNUAL CONSUMPTION	TOTAL kWh ※4		-		-	1660	-	-	-
	EER/EER CLASS	TOTAL(W/W)※5("A"~"G")	-	-	-	3.01	3.01 / B	3.01	5.09	2.74
	Erp ※6 Pdsign	kW	-	-	-	-	10.0	-		
	Erp ※6 SEER	(W/W)	-	-	-	-	5.2	-		
	Erp ※6 Annual consumption	kWh	-	-	-	-	673	-		
	Erp ※6 Class		-	-	-	-	A	-		
	POWER FACTOR	%	-	-	-	93	93	93	-	-
	NOISE INDOOR (H/M/L)	dB-A		38/34/31			-			
		Power Level dB		60/56/53			-			
	NOISE OUTDOOR (H/L)	dB-A					54/-			
		Power Level dB					70/-			
HEATING	CAPACITY	kW	10.0	10.0	10.0				2.1	13.8
		BTU/h	34100	34100	34100				7200	47100
	CURRENT	A	1.37	1.34	1.29	4.05	3.80	3.65	-	-
	INPUT POWER	W	200	200	200	2.430k	2.430k	2.430k	-	-
		TOTAL W		-		2.630k	2.630k	2.630k	410	4.000k
	COP/COP CLASS	TOTAL(W/W)※5("A"~"G")	-	-	-	3.80	3.80 / A	3.80	5.12	3.45
	Erp ※6 Pdsign	kW	-	-	-	-	9.5	-		
	Erp ※6 Tbivalen	°C	-	-	-	-	-8	-		
	Erp ※6 SCOP	(W/W)	-	-	-	-	3.8	-		
	Erp ※6 Annual consumption	kWh	-	-	-	-	3500	-		
	Erp ※6 Class		-	-	-	-	A	-		
	POWER FACTOR	%	-	-	-	91	92	93	-	-
	NOISE INDOOR (H/M/L)	dB-A		38/34/31			-		/	/
		Power Level dB		60/56/53			-			
	NOISE OUTDOOR (H/L)	dB-A		-			54/-		/	/
		Power Level dB		-			70/-			
EXTRA LOW TEMP	Total CAPACITY(kW)/INPUT POWER(W)/COP					-				
MAX CURRENT(A)/MAX INPUT POWER(W)			1.80/265	1.75/265	1.70/265	9.0/5.550k	9.0/5.800k	9.0/6.050k	/	
STARTING CURRENT(A)/COMP OUTPUT(W)			-	-	-	5.10/1.7k	4.85/1.7k	4.70/1.7k	/	
NETWORK IMPEDANCE (ΩMAX.)				-			-			
FM OUTPUT (W)				200			90		/	
MOISTURE REMOVAL VOLUME		L/h(Pt/h)	6.0		(12.6)		-			
External static pressure		Pa	100 (MIN10 - MAX150)							
I/D AIR FLOW	COOL	m^3/min (ft^3/min)	32/26/21 (1130/918/742)							
	HEAT	m^3/min (ft^3/min)	32/26/21 (1130/918/742)							
O/D AIR FLOW	COOL	m^3/min (ft^3/min)				76		(2684)		
	HEAT	m^3/min (ft^3/min)				67		(2366)		
REFRIGERANT TYPE, AMOUNT g(oz)						R410A	2.60k	(91.7)	/	
PROD	HEIGHT : H mm(inch)		290 (11-13/32)			996 (39-7/32)			/	
	WIDTH : W mm(inch)		1400 (55-1/8)			940 (37-1/32)			/	
	DEPTH : D mm(inch)		700 (27-9/16)			340 (13-13/32)			/	
PACK	HEIGHT : H mm		355			1136			/	
	WIDTH : W mm		1614			1055			/	
	DEPTH : D mm		850			485			/	
MASS	(NET) kg(lb)		45 (99)			73 (161)			/	
	(GROSS) kg(lb)		54 (119)			81 (179)			/	
LAYERS LIMIT (actually)			9 (10)			2 (3)				
Operation Condition		Cool O.D(DBT)	18°C ~ 32°C			-10°C ~ 43°C				
		Heat O.D(DBT)	16°C ~ 30°C			-15°C ~ 24°C				
PIPING	PIPE DIAMETER mm (inch)		(Liquid)ø9.52(3/8) (Gas)ø15.88(5/8)			(Liquid)ø9.52(3/8) (Gas)ø15.88(5/8)				
	CONNECT METHOD, STD LENGTH m (ft)		flared type, 5.0(16.4)			flared type, 5.0(16.4)				
	PIPE LENGTH RANGE m (ft)		5 ~ 50 (16.4 ~ 164.0)						~	~
	I/D&O/D HEIGHT DIFFERENCE m (ft)		15 (OD located lower) / 30 (OD located higher) (49.2/98.4)							
	ADD GAS AMOUNT g/m (oz/ft)		50 (0.538)							
	PIPE LENGTH FOR ADDITIONAL GAS m (ft)		30 (98.4)							

*1: In case it is necessary to indicate the air □ow volume in (l/s), the value in (m^3/min.) shall be multiplied by 16.7 and rounded down the decimal point.
*2: If the EUROVENT Certi□ed models can be operated under the □extra-low□temperature condition, -7□C dry bulb and -8□C wet-bulb temperatures with rated voltage 230 V shall be used.
*3: Network Impedance shall be applicable for EUROPE and CHINA models.
*4: The annual consumption is calculated by multiplying the input power at 230 V (400 V) by an average of 500 hours per year in cooling mode.
*5: EER and COP classification is at 230 V (400 V) only in accordance with EU directive 2002/31/EC.

Single -Type

1-1. Unit Speci□cations

PEY1

4. Low Silhouette Ducted Type S-125PF1E5A / U-125PEY1E8

INDOOR		MODEL	S-125PF1E5A							
PANEL		MODEL								
OUTDOOR		MODEL				U-125PEY1E8				
Branch pipe		MODEL	-							
PERFORMANCE TEST CONDITION			ISO13253 / EN14511 / EN12102							
POWER SUPPLY		ø, Hz	1ø 50Hz			3ø 50Hz				
		V	220	230	240	380	400	415	Min	Max
COOLING	CAPACITY	kW	12.5	12.5	12.5				3.8	13.5
		BTU/h	42700	42700	42700				13000	46100
	CURRENT	A	1.48	1.44	1.39	6.20	5.90	5.70	-	-
	INPUT POWER	W	215	215	215	3.885k	3.885k	3.885k	-	-
		TOTAL W		-		4.100k	4.100k	4.100k	900	5.000k
	ANNUAL CONSUMPTION	TOTAL kWh ※4		-		-	2050	-	-	-
	EER/EER CLASS	TOTAL(W/W)※5("A"~"G")	-	-	-	3.05	3.05 / B	3.05	4.22	2.70
	Erp ※6 Pdsign	kW	-	-	-	-	-	-		
	Erp ※6 SEER	(W/W)	-	-	-	-	-	-		
	Erp ※6 Annual consumption	kWh	-	-	-	-	-	-		
	Erp ※6 Class		-	-	-	-	-	-		
	POWER FACTOR	%	-	-	-	95	95	95	-	-
	NOISE INDOOR (H/M/L)	dB-A		39/35/32			-			
		Power Level dB		61/57/54			-			
	NOISE OUTDOOR (H/L)	dB-A					56/-			
		Power Level dB					73/-			
HEATING	CAPACITY	kW	12.5	12.5	12.5				3.4	15.0
		BTU/h	42700	42700	42700				11600	51200
	CURRENT	A	1.46	1.42	1.38	4.90	4.65	4.50	-	-
	INPUT POWER	W	210	210	210	3.060k	3.060k	3.060k	-	-
		TOTAL W		-		3.270k	3.270k	3.270k	730	4.400k
	COP/COP CLASS	TOTAL(W/W)※5("A"~"G")	-	-	-	3.82	3.82 / A	3.82	4.66	3.41
	Erp ※6 Pdsign	kW	-	-	-	-	-	-		
	Erp ※6 Tbivalen	°C	-	-	-	-	-	-		
	Erp ※6 SCOP	(W/W)	-	-	-	-	-	-		
	Erp ※6 Annual consumption	kWh	-	-	-	-	-	-		
	Erp ※6 Class		-	-	-	-	-	-		
	POWER FACTOR	%	-	-	-	95	95	95	-	-
	NOISE INDOOR (H/M/L)	dB-A		39/35/32			-		/	/
		Power Level dB		61/57/54			-			
	NOISE OUTDOOR (H/L)	dB-A		-			56/-		/	/
		Power Level dB		-			73/-			
EXTRA LOW TEMP	Total CAPACITY(kW)/INPUT POWER(W)/COP		-							
MAX CURRENT(A)/MAX INPUT POWER(W)			1.80/265	1.75/265	1.70/265	10.0/6.200k	10.0/6.500k	10.0/6.750k	/	
STARTING CURRENT(A)/COMP OUTPUT(W)			-	-	-	6.20/3.0k	5.90/3.0k	5.70/3.0k	/	
NETWORK IMPEDANCE (ΩMAX.)				-			-			
FM OUTPUT (W)				200			90		/	
MOISTURE REMOVAL VOLUME		L/h(Pt/h)	7.9		(16.6)		-			
External static pressure		Pa	100 (MIN10 - MAX150)							
I/D AIR FLOW	COOL	m^3/min (ft^3/min)	34/29/23 (1201/1024/812)							
	HEAT	m^3/min (ft^3/min)	34/29/23 (1201/1024/812)							
O/D AIR FLOW	COOL	m^3/min (ft^3/min)				80		(2825)		
	HEAT	m^3/min (ft^3/min)				73		(2578)		
REFRIGERANT TYPE, AMOUNT g(oz)						R410A	3.20k	(112.9)	/	
PROD	HEIGHT : H mm(inch)		290 (11-13/32)			996 (39-7/32)			/	
	WIDTH : W mm(inch)		1400 (55-1/8)			940 (37-1/32)			/	
	DEPTH : D mm(inch)		700 (27-9/16)			340 (13-13/32)			/	
PACK	HEIGHT : H mm		355			1136			/	
	WIDTH : W mm		1614			1055			/	
	DEPTH : D mm		850			485			/	
MASS	(NET) kg(lb)		45 (99)			85 (187)			/	
	(GROSS) kg(lb)		54 (119)			93 (205)			/	
LAYERS LIMIT (actually)			9 (10)			2 (3)				
Operation Condition		Cool O.D(DBT)	18°C ~ 32°C			-10°C ~ 43°C				
		Heat O.D(DBT)	16°C ~ 30°C			-15°C ~ 24°C				
PIPING	PIPE DIAMETER mm (inch)		(Liquid)ø9.52(3/8) (Gas)ø15.88(5/8)			(Liquid)ø9.52(3/8) (Gas)ø15.88(5/8)				
	CONNECT METHOD, STD LENGTH m (ft)		flared type, 5.0(16.4)			flared type, 5.0(16.4)				
	PIPE LENGTH RANGE m (ft)		5 ~ 50 (16.4 ~ 164.0)						~	~
	I/D&O/D HEIGHT DIFFERENCE m (ft)		15 (OD located lower) / 30 (OD located higher) (49.2/98.4)							
	ADD GAS AMOUNT g/m (oz/ft)		50 (0.538)							
	PIPE LENGTH FOR ADDITIONAL GAS m (ft)		30 (98.4)							

*1: In case it is necessary to indicate the air □ow volume in (l/s), the value in (m^3/min.) shall be multiplied by 16.7 and rounded down the decimal point.
*2: If the EUROVENT Certi□ed models can be operated under the □extra-low□temperature condition, -7□C dry bulb and -8□C wet-bulb temperatures with rated voltage 230 V shall be used.
*3: Network Impedance shall be applicable for EUROPE and CHINA models.
*4: The annual consumption is calculated by multiplying the input power at 230 V (400 V) by an average of 500 hours per year in cooling mode.
*5: EER and COP classification is at 230 V (400 V) only in accordance with EU directive 2002/31/EC.

Single -Type

1-1. Unit Speci□cations

PEY1

4. Low Silhouette Ducted Type S-140PF1E5A / U-140PEY1E8

INDOOR		MODEL	S-140PF1E5A							
PANEL		MODEL								
OUTDOOR		MODEL				U-140PEY1E8				
Branch pipe		MODEL	-							
PERFORMANCE TEST CONDITION			ISO13253 / EN14511 / EN12102							
POWER SUPPLY		ø, Hz	1ø 50Hz			3ø 50Hz				
		V	220	230	240	380	400	415	Min	Max
COOLING	CAPACITY	kW	14.0	14.0	14.0				3.3	15.5
		BTU/h	47800	47800	47800				11300	52900
	CURRENT	A	1.55	1.50	1.47	6.75	6.45	6.25	-	-
	INPUT POWER	W	225	225	225	4.125k	4.125k	4.125k	-	-
		TOTAL W		-		4.350k	4.350k	4.350k	840	6.000k
	ANNUAL CONSUMPTION	TOTAL kWh ※4		-		-	2175	-	-	-
	EER/EER CLASS	TOTAL(W/W) ※5/("A"~"G")	-	-	-	3.22	3.22 / A	3.22	3.93	2.58
	Erp ※6 Pdsign	kW	-	-	-	-	-	-		
	Erp ※6 SEER	(W/W)	-	-	-	-	-	-		
	Erp ※6 Annual consumption	kWh	-	-	-	-	-	-		
	Erp ※6 Class		-	-	-	-	-	-		
	POWER FACTOR	%	-	-	-	93	92	92	-	-
	NOISE INDOOR (H/M/L)	dB-A		40/36/33			-			
		Power Level dB		62/58/55			-			
	NOISE OUTDOOR (H/L)	dB-A					54/-			
		Power Level dB					71/-			
HEATING	CAPACITY	kW	14.0	14.0	14.0				4.1	16.0
		BTU/h	47800	47800	47800				14000	54600
	CURRENT	A	1.55	1.50	1.46	5.60	5.40	5.20	-	-
	INPUT POWER	W	225	225	225	3.355k	3.355k	3.355k	-	-
		TOTAL W		-		3.580k	3.580k	3.580k	900	5.200k
	COP/COP CLASS	TOTAL(W/W) ※5/("A"~"G")	-	-	-	3.91	3.91 / A	3.91	4.56	3.08
	Erp ※6 Pdsign	kW	-	-	-	-	-	-		
	Erp ※6 Tbivalen	°C	-	-	-	-	-	-		
	Erp ※6 SCOP	(W/W)	-	-	-	-	-	-		
	Erp ※6 Annual consumption	kWh	-	-	-	-	-	-		
	Erp ※6 Class		-	-	-	-	-	-		
	POWER FACTOR	%	-	-	-	91	90	90	-	-
	NOISE INDOOR (H/M/L)	dB-A		40/36/33			-		/	/
		Power Level dB		62/58/55			-			
	NOISE OUTDOOR (H/L)	dB-A		-			53/-		/	/
		Power Level dB		-			70/-			
EXTRA LOW TEMP	Total CAPACITY(kW)/INPUT POWER(W)/COP					-				
MAX CURRENT(A)/MAX INPUT POWER(W)			1.91/285	1.86/285	1.81/285	10.0/6.200k	10.0/6.500k	10.0/6.750k	/	
STARTING CURRENT(A)/COMP OUTPUT(W)			-	-	-	6.75/3.0k	6.45/3.0k	6.25/3.0k	/	
NETWORK IMPEDANCE (ΩMAX.)				-			-			
FM OUTPUT (W)				200			90×2		/	
MOISTURE REMOVAL VOLUME		L/h(Pt/h)	9.0		(18.9)		-			
External static pressure		Pa	100 (MIN10 - MAX150)							
I/D AIR FLOW	COOL	m^3/min (ft^3/min)	36/32/25 (1271/1130/883)							
	HEAT	m^3/min (ft^3/min)	36/32/25 (1271/1130/883)							
O/D AIR FLOW	COOL	m^3/min (ft^3/min)				135		(4767)		
	HEAT	m^3/min (ft^3/min)				120		(4238)		
REFRIGERANT TYPE, AMOUNT g(oz)						R410A	3.40k	(119.9)	/	
PROD IM	HEIGHT : H mm(inch)		290 (11-13/32)			1416 (55-3/4)			/	
	WIDTH : W mm(inch)		1400 (55-1/8)			940 (37-1/32)			/	
	DEPTH : D mm(inch)		700 (27-9/16)			340 (13-13/32)			/	
PACK IM	HEIGHT : H mm		355			1556			/	
	WIDTH : W mm		1614			1055			/	
	DEPTH : D mm		850			485			/	
MASS	(NET) kg(lb)		45 (99)			98 (216)			/	
	(GROSS) kg(lb)		54 (119)			108 (238)			/	
LAYERS LIMIT (actually)			9 (10)			1 (2)				
Operation Condition		Cool O.D(DBT)	18°C ~ 32°C			-10°C ~ 43°C				
		Heat O.D(DBT)	16°C ~ 30°C			-15°C ~ 24°C				
PIPING	PIPE DIAMETER mm (inch)		(Liquid)ø9.52(3/8) (Gas)ø15.88(5/8)			(Liquid)ø9.52(3/8) (Gas)ø15.88(5/8)				
	CONNECT METHOD, STD LENGTH m (ft)		flared type, 5.0(16.4)			flared type, 5.0(16.4)				
	PIPE LENGTH RANGE m (ft)		5 ~ 50 (16.4 ~ 164.0)						~	~
	I/D&O/D HEIGHT DIFFERENCE m (ft)		15 (OD located lower) / 30 (OD located higher) (49.2/98.4)							
	ADD GAS AMOUNT g/m (oz/ft)		50 (0.538)							
	PIPE LENGTH FOR ADDITIONAL GAS m (ft)		30 (98.4)							

*1: In case it is necessary to indicate the air □ow volume in (l/s), the value in (m^3/min.) shall be multiplied by 16.7 and rounded down the decimal point.
*2: If the EUROVENT Certi□ed models can be operated under the □extra-low□temperature condition, -7□C dry bulb and -8□C wet-bulb temperatures with rated voltage 230 V shall be used.
*3: Network Impedance shall be applicable for EUROPE and CHINA models.
*4: The annual consumption is calculated by multiplying the input power at 230 V (400 V) by an average of 500 hours per year in cooling mode.
*5: EER and COP classification is at 230 V (400 V) only in accordance with EU directive 2002/31/EC.
*6: SEER and SCOP classification is at 230V(400V) only in accordance with EN-14825. For heating, SCOP indicates the value of only Average heating season, Other fiche data indicates in an attached sheet.

Simultaneous (Twin) -Type

1-1. Unit Speci□cations

PEY1

5. Ducted Type S-36PN1E5A×2 / U-71PEY1E5

INDOOR		MODEL	S-36PN1E5A×2							
PANEL		MODEL	-							
OUTDOOR		MODEL				U-71PEY1E5				
Branch pipe		MODEL	-							
PERFORMANCE TEST CONDITION			ISO13253 / EN14511 / EN14825 / EN12102							
POWER SUPPLY		ø, Hz	1ø 50Hz			1ø 50Hz				
		V	220	230	240	220	230	240	Min	Max
COOLING	CAPACITY	kW	7.1	7.1	7.1				2.0	7.7
		BTU/h	24200	24200	24200				6800	26300
	CURRENT	A	0.42×2	0.43×2	0.44×2	12.0	11.5	11.0	-	-
	INPUT POWER	W	90×2	95×2	100×2	2.430k	2.432k	2.434k	-	-
		TOTAL W		-		2.610k	2.620k	2.630k	325	3.300k
	ANNUAL CONSUMPTION	TOTAL kWh ※4		-		-	1310	-	-	-
	EER/EER CLASS	TOTAL(W/W)※5("A"~"G")	-	-	-	2.72	2.71 / D	2.70	6.15	2.33
	Erp ※6 Pdsign	kW	-	-	-	-	7.1	-		
	Erp ※6 SEER	(W/W)	-	-	-	-	5.0	-		
	Erp ※6 Annual consumption	kWh	-	-	-	-	496	-		
	Erp ※6 Class		-	-	-	-	B	-		
	POWER FACTOR	%	-	-	-	92	92	92	-	-
	NOISE INDOOR (H/M/L)	dB-A		40/38/35			-			
		Power Level dB		57/55/52			-			
	NOISE OUTDOOR (H/L)	dB-A					50/-			
		Power Level dB					70/-			
HEATING	CAPACITY	kW	7.1	7.1	7.1				1.8	8.1
		BTU/h	24200	24200	24200				6100	27600
	CURRENT	A	0.42×2	0.43×2	0.44×2	9.60	9.20	8.90	-	-
	INPUT POWER	W	90×2	94×2	98×2	1.940k	1.940k	1.940k	-	-
		TOTAL W		-		2.120k	2.130k	2.140k	275	2.840k
	COP/COP CLASS	TOTAL(W/W)※5("A"~"G")	-	-	-	3.35	3.33 / C	3.32	6.55	2.85
	Erp ※6 Pdsign	kW	-	-	-	-	5.1	-		
	Erp ※6 Tbivalen	°C	-	-	-	-	-7	-		
	Erp ※6 SCOP	(W/W)	-	-	-	-	3.8	-		
	Erp ※6 Annual consumption	kWh	-	-	-	-	1877	-		
	Erp ※6 Class		-	-	-	-	A	-		
	POWER FACTOR	%	-	-	-	92	92	91	-	-
	NOISE INDOOR (H/M/L)	dB-A		40/38/35			-		/	/
		Power Level dB		57/55/52			-			
	NOISE OUTDOOR (H/L)	dB-A		-			52/-		/	/
		Power Level dB		-			70/-			
EXTRA LOW TEMP	Total CAPACITY(kW)/INPUT POWER(W)/COP				-					
MAX CURRENT(A)/MAX INPUT POWER(W)			0.60×2/130×2	0.62×2/140×2	0.63×2/150×2	18.0/3.640k	18.0/3.810k	18.0/3.970k	/	
STARTING CURRENT(A)/COMP OUTPUT(W)			-	-	-	11.8/2.5k	11.3/2.5k	10.8/2.5k	/	
NETWORK IMPEDANCE (ΩMAX.)				-			-			
FM OUTPUT (W)				60×2			90		/	
MOISTURE REMOVAL VOLUME		L/h(Pt/h)	4.2	(2.1×2)	(8.8)		-			
External static pressure		Pa		50 (MIN10 - MAX80)						
I/D AIR FLOW	COOL	m^3/min (ft^3/min)		[14/12/10 (494/424/353)]×2						
	HEAT	m^3/min (ft^3/min)		[14/12/10 (494/424/353)]×2						
O/D AIR FLOW	COOL	m^3/min (ft^3/min)				39		(1377)		
	HEAT	m^3/min (ft^3/min)				39		(1377)		
REFRIGERANT TYPE, AMOUNT g(oz)						R410A	1.70k	(60.0)	/	
PROD	HEIGHT : H mm(inch)			250 (9-27/32)			569 (22-13/32)		/	
	WIDTH : W mm(inch)		780 (+100)	(30-23/32)	(+3-15/16)		790 (31-7/64)		/	
	DEPTH : D mm(inch)			650 (25-19/32)			285 (11-7/32)		/	
PACK	HEIGHT : H mm			345			645		/	
	WIDTH : W mm			1007			921		/	
	DEPTH : D mm			777			386		/	
MASS	(NET) kg(lb)			29 (64)			42 (93)		/	
	(GROSS) kg(lb)			34 (75)			46 (101)		/	
LAYERS LIMIT (actually)				8 (9)			4 (5)			
Operation Condition		Cool O.D(DBT)		18°C ~ 32°C			-10°C ~ 43°C			
		Heat O.D(DBT)		16°C ~ 30°C			-15°C ~ 24°C			
PIPING	PIPE DIAMETER mm (inch)		(Liquid)ø6.35(1/4) (Gas)ø12.7(1/2)			(Liquid)ø9.52(3/8) (Gas)ø15.88(5/8)				
	CONNECT METHOD, STD LENGTH m (ft)		flared type, 5.0(16.4)			flared type, 5.0(16.4)				
	PIPE LENGTH RANGE m (ft)			5 ~ 50 (16.4 ~ 164.0)					~	~
	I/D&O/D HEIGHT DIFFERENCE m (ft)		15 (OD located lower) / 30 (OD located higher) (49.2/98.4)							
	ADD GAS AMOUNT g/m (oz/ft)			40 (0.430)						
	PIPE LENGTH FOR ADDITIONAL GAS m (ft)			20 (65.6)						

*1: In case it is necessary to indicate the air □ow volume in (l/s), the value in (m^3/min.) shall be multiplied by 16.7 and rounded down the decimal point.
*2: If the EUROVENT Certi□ed models can be operated under the □extra-low□temperature condition, -7□C dry bulb and -8□C wet-bulb temperatures with rated voltage 230 V shall be used.
*3: Network Impedance shall be applicable for EUROPE and CHINA models.
*4: The annual consumption is calculated by multiplying the input power at 230 V (400 V) by an average of 500 hours per year in cooling mode.
*5: EER and COP classification is at 230 V (400 V) only in accordance with EU directive 2002/31/EC.
*6: SEER and SCOP classification is at 230V(400V) only in accordance with EN-14825. For heating, SCOP indicates the value of only Average heating season, Other fiche data indicates in an attached sheet.

Simultaneous (Twin) -Type

1-1. Unit Speci□cations

PEY1

5. Ducted Type S-50PN1E5A×2 / U-100PEY1E5

INDOOR		MODEL	S-50PN1E5A×2							
PANEL		MODEL	-							
OUTDOOR		MODEL				U-100PEY1E5				
Branch pipe		MODEL	CZ-P155BK1							
PERFORMANCE TEST CONDITION			ISO13253 / EN14511 / EN14825 / EN12102							
POWER SUPPLY		ø, Hz	1ø 50Hz			1ø 50Hz				
		V	220	230	240	220	230	240	Min	Max
COOLING	CAPACITY	kW	10.0	10.0	10.0				2.7	11.5
		BTU/h	34100	34100	34100				9200	39200
	CURRENT	A	0.54×2	0.55×2	0.56×2	15.9	15.2	14.7	-	-
	INPUT POWER	W	115×2	120×2	125×2	3.320k	3.320k	3.320k	-	-
		TOTAL W		-		3.550k	3.560k	3.570k	570	4.300k
	ANNUAL CONSUMPTION	TOTAL kWh ※4		-		-	1780	-	-	-
	EER/EER CLASS	TOTAL(W/W)※5/("A"~"G")	-	-	-	2.82	2.81 / C	2.80	4.74	2.67
	Erp ※6 Pdsign	kW	-	-	-	-	10.0	-		
	Erp ※6 SEER	(W/W)	-	-	-	-	4.9	-		
	Erp ※6 Annual consumption	kWh	-	-	-	-	715	-		
	Erp ※6 Class		-	-	-	-	B	-		
	POWER FACTOR	%	-	-	-	95	95	94	-	-
	NOISE INDOOR (H/M/L)	dB-A		41/39/35			-			
		Power Level dB		58/56/52			-			
	NOISE OUTDOOR (H/L)	dB-A					54/-			
		Power Level dB					70/-			
HEATING	CAPACITY	kW	10.0	10.0	10.0				2.1	13.8
		BTU/h	34100	34100	34100				7200	47100
	CURRENT	A	0.54×2	0.55×2	0.56×2	12.9	12.3	11.9	-	-
	INPUT POWER	W	115×2	120×2	125×2	2.690k	2.690k	2.690k	-	-
		TOTAL W		-		2.920k	2.930k	2.940k	450	4.100k
	COP/COP CLASS	TOTAL(W/W)※5/("A"~"G")	-	-	-	3.42	3.41 / B	3.40	4.67	3.37
	Erp ※6 Pdsign	kW	-	-	-	-	7.5	-		
	Erp ※6 Tbivalen	°C	-	-	-	-	-9	-		
	Erp ※6 SCOP	(W/W)	-	-	-	-	3.8	-		
	Erp ※6 Annual consumption	kWh	-	-	-	-	2761	-		
	Erp ※6 Class		-	-	-	-	A	-		
	POWER FACTOR	%	-	-	-	95	95	94	-	-
	NOISE INDOOR (H/M/L)	dB-A		41/39/35			-		/	/
		Power Level dB		58/56/52			-			
	NOISE OUTDOOR (H/L)	dB-A		-			54/-		/	/
		Power Level dB		-			70/-			
EXTRA LOW TEMP	Total CAPACITY(kW)/INPUT POWER(W)/COP				-					
MAX CURRENT(A)/MAX INPUT POWER(W)			0.74×2/165×2	0.76×2/180×2	0.78×2/190×2	25.0/5.300k	25.0/5.500k	25.0/5.700k	/	
STARTING CURRENT(A)/COMP OUTPUT(W)			-	-	-	15.9/1.7k	15.2/1.7k	14.7/1.7k	/	
NETWORK IMPEDANCE (ΩMAX.)				-			-			
FM OUTPUT (W)				85×2			90		/	
MOISTURE REMOVAL VOLUME		L/h(Pt/h)	6.0	(3.0×2)	(12.6)		-			
External static pressure		Pa		50 (MIN10 - MAX80)						
I/D AIR FLOW	COOL	m^3/min (ft^3/min)		[16/13/11 (565/459/388)]×2						
	HEAT	m^3/min (ft^3/min)		[16/13/11 (565/459/388)]×2						
O/D AIR FLOW	COOL	m^3/min (ft^3/min)				76		(2684)		
	HEAT	m^3/min (ft^3/min)				67		(2366)		
REFRIGERANT TYPE, AMOUNT g(oz)						R410A	2.60k	(91.7)	/	
PROD DIM	HEIGHT : H mm(inch)			250 (9-27/32)			996 (39-7/32)		/	
	WIDTH : W mm(inch)		780 (+100) 30-23/32 (+3-15/16)				940 (37-1/32)		/	
	DEPTH : D mm(inch)			650 (25-19/32)			340 (13-13/32)		/	
PACK DIM	HEIGHT : H mm			345			1136		/	
	WIDTH : W mm			1007			1055		/	
	DEPTH : D mm			777			485		/	
MASS	(NET) kg(lb)			29 (64)			73 (161)		/	
	(GROSS) kg(lb)			34 (75)			81 (179)		/	
LAYERS LIMIT (actually)				8 (9)			2 (3)			
Operation Condition		Cool O.D(DBT)		18°C ~ 32°C			-10°C ~ 43°C			
		Heat O.D(DBT)		16°C ~ 30°C			-15°C ~ 24°C			
PIPING	PIPE DIAMETER mm (inch)		(Liquid)ø6.35(1/4) (Gas)ø12.7(1/2)			(Liquid)ø9.52(3/8) (Gas)ø15.88(5/8)				
	CONNECT METHOD, STD LENGTH m (ft)		flared type, 5.0(16.4)			flared type, 5.0(16.4)				
	PIPE LENGTH RANGE m (ft)			5 ~ 50 (16.4 ~ 164.0)					~	~
	I/D&O/D HEIGHT DIFFERENCE m (ft)		15 (OD located lower) / 30 (OD located higher) (49.2/98.4)							
	ADD GAS AMOUNT g/m (oz/ft)			50 (0.538)						
	PIPE LENGTH FOR ADDITIONAL GAS m (ft)			30 (98.4)						

*1: In case it is necessary to indicate the air □ow volume in (l/s), the value in (m^3/min.) shall be multiplied by 16.7 and rounded down the decimal point.
*2: If the EUROVENT Certi□ed models can be operated under the □extra-low□temperature condition, -7□C dry bulb and -8□C wet-bulb temperatures with rated voltage 230 V shall be used.
*3: Network Impedance shall be applicable for EUROPE and CHINA models.
*4: The annual consumption is calculated by multiplying the input power at 230 V (400 V) by an average of 500 hours per year in cooling mode.
*5: EER and COP classification is at 230 V (400 V) only in accordance with EU directive 2002/31/EC.
*6: SEER and SCOP classification is at 230V(400V) only in accordance with EN-14825. For heating, SCOP indicates the value of only Average heating season, Other fiche data indicates in an attached sheet.

Single-Type

1-1. Unit Speci□cations

PEY1

5. Ducted Type S-60PN1E5A / U-60PEY1E5

INDOOR		MODEL	S-60PN1E5A							
PANEL		MODEL	-			-				
OUTDOOR		MODEL				U-60PEY1E5				
Branch pipe		MODEL	-							
PERFORMANCE TEST CONDITION			ISO13253 / EN14511 / EN14825 / EN12102							
POWER SUPPLY		□, Hz	1□ 50Hz			1□ 50Hz				
		V	220	230	240	220	230	240	Min	Max
COOLING	CAPACITY	kW	6.0	6.0	6.0				2.0	7.0
		BTU/h	20500	20500	20500				6800	23900
	CURRENT	A	1.12	1.08	1.04	9.10	8.70	8.40	-	-
	INPUT POWER	W	140	140	140	1.850k	1.850k	1.850k	-	-
		TOTAL W	-			1.990k	1.990k	1.990k	325	2.940k
	ANNUAL CONSUMPTION	TOTAL kWh ※4	-			-	995	-	-	-
	EER/EER CLASS	TOTAL(W/W)※5/("A"□"G")	-	-	-	3.02	3.02 / B	3.02	6.15	2.38
	Erp ※6 Pdsign	kW	-	-	-	-	6.0	-		
	Erp ※6 SEER	(W/W)	-	-	-	-	4.8	-		
	Erp ※6 Annual consumption	kWh	-	-	-	-	438	-		
	Erp ※6 Class		-	-	-	-	B	-		
	POWER FACTOR	□	-	-	-	92	92	92	-	-
	NOISE INDOOR	dB-A (H/M/L)	43/41/36							
		Power Level dB	60/58/53							
	NOISE OUTDOOR	dB-A (H/L)				46/-				
		Power Level dB				65/-				
HEATING	CAPACITY	kW	6.0	6.0	6.0				1.8	7.0
		BTU/h	20500	20500	20500				6100	23900
	CURRENT	A	1.12	1.08	1.04	7.50	7.20	6.90	-	-
	INPUT POWER	W	140	140	140	1.520k	1.520k	1.520k	-	-
		TOTAL W	-			1.660k	1.660k	1.660k	275	2.420k
	COP/COP CLASS	TOTAL(W/W)※5/("A"□"G")	-	-	-	3.61	3.61 / A	3.61	6.55	2.89
	Erp ※6 Pdsign	kW	-	-	-	-	4.8	-		
	Erp ※6 Tbivalen	°C	-	-	-	-	-10	-		
	Erp ※6 SCOP	(W/W)	-	-	-	-	3.8	-		
	Erp ※6 Annual consumption	kWh	-	-	-	-	1757	-		
	Erp ※6 Class		-	-	-	-	A	-		
	POWER FACTOR	□	-	-	-	92	92	92	-	-
	NOISE INDOOR	dB-A (H/M/L)	43/41/36			-			/	/
		Power Level dB	60/58/53			-				
	NOISE OUTDOOR	dB-A (H/L)	-			50/-			/	/
		Power Level dB	-			69/-				
EXTRA LOW TEMP	Total CAPACITY(kW)/INPUT POWER(W)/COP		-							
MAX CURRENT(A)/MAX INPUT POWER(W)			1.28/160	1.24/160	1.20/160	18.0/3.640k	18.0/3.810k	18.0/3.970k	/	
STARTING CURRENT(A)/COMP OUTPUT(W)			-	-	-	9.1/2.0k	8.7/2.0k	8.4/2.0k	/	
NETWORK IMPEDANCE (ΩMAX.)			-			-				
FM OUTPUT (W)			120			90			/	
MOISTURE REMOVAL VOLUME		L/h(Pt/h)	3.4 (7.1)			-				
External static pressure		Pa	50 (MIN10 - MAX80)							
I/D AIR FLOW	COOL	m³/min (ft³/min)	22/20/16 (777/706/565)							
I/D AIR FLOW	HEAT	m³/min (ft³/min)	22/20/16 (777/706/565)							
O/D AIR FLOW	COOL	m³/min (ft³/min)				30 (1067)				
O/D AIR FLOW	HEAT	m³/min (ft³/min)				35 (1229)				
REFRIGERANT TYPE, AMOUNT g(oz)						R410A 1.70k (60.0)			/	
PROD IM	HEIGHT : H mm(inch)		250 (9-27/32)			569 (22-13/32)			/	
PROD IM	WIDTH : W mm(inch)		1000(+100) (39-5/16)(+3-15/16)			790 (31-7/64)			/	
PROD IM	DEPTH : D mm(inch)		650 (25-19/32)			285 (11-7/32)			/	
PAC DIM	HEIGHT : H mm		338			645			/	
PAC DIM	WIDTH : W mm		1211			921			/	
PAC DIM	DEPTH : D mm		761			386			/	
MASS	(NET) kg(lb)		32 (71)			42 (93)			/	
MASS	(GROSS) kg(lb)		38 (84)			46 (101)			/	
LAYERS LIMIT (actually)			6 (7)			4 (5)				
Operation Condition		Cool (DBT)	18°C □32°C			-10°C □43°C				
Operation Condition		Heat (DBT)	16°C □30°C			-15°C □24°C				
PIPING	PIPE DIAMETER mm (inch)		(Liquid)□9.52(3/8) (Gas)□15.88(5/8)			(Liquid)□9.52(3/8) (Gas)□15.88(5/8)				
PIPING	CONNECT METHOD, STD LENGTH m (ft)		" ared type, 5.0(16.4)			" ared type, 5.0(16.4)				
PIPING	PIPE LENGTH RANGE m (ft)		5 □50 (16.4 □164)						□	□
PIPING	I/D&O/D HEIGHT DIFFERENCE m (ft)		15 (OD located lower) / 30 (OD located higher) (49.2/98.4)							
PIPING	ADD GAS AMOUNT g/m (oz/ft)		40 (0.430)							
PIPING	PIPE LENGTH FOR ADDITIONAL GAS m (ft)		20 (65.6)							

*1: In case it is necessary to indicate the air " ow volume in (l/s), the value in (m³/min.) shall be multiplied by 16.7 and rounded down the decimal point.
*2: If the EUROVENT Certi"ed models can be operated under the •extra-low□temperature condition, -7°C dry bulb and -8°C wet-bulb temperatures with rated voltage 230 V shall be used.
*3: Network Impedance shall be applicable for EUROPE and CHINA models.
*4: The annual consumption is calculated by multiplying the input power at 230 V (400 V) by an average of 500 hours per year in cooling mode.
*5: EER and COP classification is at 230 V (400 V) only in accordance with EU directive 2002/31/EC.
*6: SEER and SCOP classification is at 230V(400V) only in accordance with EN-14825. For heating, SCOP indicates the value of only Average heating season, Other fiche data indicates in an attached sheet.

Simultaneous (Twin) -Type

1-1. Unit Speci□cations

PEY1

5. Ducted Type S-60PN1E5A×2 / U-125PEY1E5

INDOOR		MODEL	S-60PN1E5A×2							
PANEL		MODEL	-							
OUTDOOR		MODEL				U-125PEY1E5				
Branch pipe		MODEL	CZ-P155BK1							
PERFORMANCE TEST CONDITION			ISO13253 / EN14511 / EN12102							
POWER SUPPLY		ø, Hz	1ø 50Hz			1ø 50Hz				
		V	220	230	240	220	230	240	Min	Max
COOLING	CAPACITY	kW	12.5	12.5	12.5				3.8	13.5
		BTU/h	42700	42700	42700				13000	46100
	CURRENT	A	1.12×2	1.08×2	1.04×2	19.9	19.0	18.4	-	-
	INPUT POWER	W	140×2	140×2	140×2	4.165k	4.165k	4.165k	-	-
		TOTAL W		-		4.445k	4.445k	4.445k	950	5.200k
	ANNUAL CONSUMPTION	TOTAL kWh ※4		-		-	2223	-	-	-
	EER/EER CLASS	TOTAL(W/W)※5/("A"~"G")	-	-	-	2.81	2.81 / C	2.81	4.00	2.60
	Erp ※6 Pdsign	kW	-	-	-	-	-	-		
	Erp ※6 SEER	(W/W)	-	-	-	-	-	-		
	Erp ※6 Annual consumption	kWh	-	-	-	-	-	-		
	Erp ※6 Class		-	-	-	-	-	-		
	POWER FACTOR	%	-	-	-	95	95	94	-	-
	NOISE INDOOR (H/M/L)	dB-A		43/41/36			-			
		Power Level dB		60/58/53			-			
	NOISE OUTDOOR (H/L)	dB-A					56/-			
		Power Level dB					73/-			
HEATING	CAPACITY	kW	12.5	12.5	12.5				3.4	15.0
		BTU/h	42700	42700	42700				11600	51200
	CURRENT	A	1.12×2	1.08×2	1.04×2	16.2	15.5	15.0	-	-
	INPUT POWER	W	140×2	140×2	140×2	3.385k	3.385k	3.385k	-	-
		TOTAL W		-		3.665k	3.665k	3.665k	780	4.600k
	COP/COP CLASS	TOTAL(W/W)※5/("A"~"G")	-	-	-	3.41	3.41 / B	3.41	4.36	3.26
	Erp ※6 Pdsign	kW	-	-	-	-	-	-		
	Erp ※6 Tbivalen	°C	-	-	-	-	-	-		
	Erp ※6 SCOP	(W/W)	-	-	-	-	-	-		
	Erp ※6 Annual consumption	kWh	-	-	-	-	-	-		
	Erp ※6 Class		-	-	-	-	-	-		
	POWER FACTOR	%	-	-	-	95	95	94	-	-
	NOISE INDOOR (H/M/L)	dB-A		43/41/36			-		/	/
		Power Level dB		60/58/53			-			
	NOISE OUTDOOR (H/L)	dB-A		-			56/-		/	/
		Power Level dB		-			73/-			
EXTRA LOW TEMP	Total CAPACITY(kW)/INPUT POWER(W)/COP				-					
MAX CURRENT(A)/MAX INPUT POWER(W)			1.28×2/160×2	1.24×2/160×2	1.20×2/160×2	29.0/6.000k	29.0/6.300k	29.0/6.600k	/	
STARTING CURRENT(A)/COMP OUTPUT(W)			-	-	-	19.9/3.0k	19.0/3.0k	18.4/3.0k	/	
NETWORK IMPEDANCE (ΩMAX.)				-			-			
FM OUTPUT (W)				120×2			90		/	
MOISTURE REMOVAL VOLUME		L/h(Pt/h)	7.9	(3.95×2)	(16.6)		-			
External static pressure		Pa	50 (MIN10 ~ MAX80)							
I/D AIR FLOW	COOL	m^3/min (ft^3/min)	[22/20/16 (777/706/565)]×2							
	HEAT	m^3/min (ft^3/min)	[22/20/16 (777/706/565)]×2							
O/D AIR FLOW	COOL	m^3/min (ft^3/min)				80		(2825)		
	HEAT	m^3/min (ft^3/min)				73		(2578)		
REFRIGERANT TYPE, AMOUNT g(oz)						R410A	3.20k	(112.9)	/	
PROD. DIM	HEIGHT : H mm(inch)		250 (9-27/32)			996 (39-7/32)			/	
	WIDTH : W mm(inch)		1000 (+100) 39-5/16 (+3-15/16)			940 (37-1/32)			/	
	DEPTH : D mm(inch)		650 (25-19/32)			340 (13-13/32)			/	
PACK. DIM	HEIGHT : H mm		338			1136			/	
	WIDTH : W mm		1211			1055			/	
	DEPTH : D mm		761			485			/	
MASS	(NET) kg(lb)		32 (71)			85 (187)			/	
	(GROSS) kg(lb)		38 (84)			93 (205)			/	
LAYERS LIMIT (actually)			6 (7)			2 (3)				
Operation Condition		Cool O.D(DBT)	18°C ~ 32°C			-10°C ~ 43°C				
		Heat O.D(DBT)	16°C ~ 30°C			-15°C ~ 24°C				
PIPING	PIPE DIAMETER mm (inch)		(Liquid)ø9.52(3/8) (Gas)ø15.88(5/8)			(Liquid)ø9.52(3/8) (Gas)ø15.88(5/8)				
	CONNECT METHOD, STD LENGTH m (ft)		flared type, 5.0(16.4)			flared type, 5.0(16.4)				
	PIPE LENGTH RANGE m (ft)		5 ~ 50 (16.4 ~ 164.0)						~	~
	I/D&O/D HEIGHT DIFFERENCE m (ft)		15 (OD located lower) / 30 (OD located higher) (49.2/98.4)							
	ADD GAS AMOUNT g/m (oz/ft)		50 (0.538)							
	PIPE LENGTH FOR ADDITIONAL GAS m (ft)		30 (98.4)							

*1: In case it is necessary to indicate the air □ow volume in (l/s), the value in (m^3/min.) shall be multiplied by 16.7 and rounded down the decimal point.
*2: If the EUROVENT Certi□ed models can be operated under the □extra-low□temperature condition, -7□C dry bulb and -8□C wet-bulb temperatures with rated voltage 230 V shall be used.
*3: Network Impedance shall be applicable for EUROPE and CHINA models.
*4: The annual consumption is calculated by multiplying the input power at 230 V (400 V) by an average of 500 hours per year in cooling mode.
*5: EER and COP classification is at 230 V (400 V) only in accordance with EU directive 2002/31/EC.
*6: SEER and SCOP classification is at 230V(400V) only in accordance with EN-14825. For heating, SCOP indicates the value of only Average heating season, Other fiche data indicates in an attached sheet.

Single -Type

1-1. Unit Speci□cations

PEY1

5. Ducted Type S-71PN1E5A / U-71PEY1E5

INDOOR		MODEL	S-71PN1E5A							
PANEL		MODEL	-							
OUTDOOR		MODEL				U-71PEY1E5				
Branch pipe		MODEL	-							
PERFORMANCE TEST CONDITION			ISO13253 / EN14511 / EN14825 / EN12102							
POWER SUPPLY		ø, Hz	1ø 50Hz			1ø 50Hz				
		V	220	230	240	220	230	240	Min	Max
COOLING	CAPACITY	kW	7.1	7.1	7.1				2.0	7.7
		BTU/h	24200	24200	24200				6800	26300
	CURRENT	A	1.12	1.08	1.04	12.0	11.5	11.0	-	-
	INPUT POWER	W	140	140	140	2.430k	2.430k	2.430k	-	-
		TOTAL W		-		2.570k	2.570k	2.570k	325	3.230k
	ANNUAL CONSUMPTION	TOTAL kWh ※4		-		-	1285	-	-	-
	EER/EER CLASS	TOTAL(W/W) ※5(("A"~"G")	-	-	-	2.76	2.76 / D	2.76	6.15	2.38
	Erp ※6 Pdsign	kW	-	-	-	-	7.1	-		
	Erp ※6 SEER	(W/W)	-	-	-	-	5.1	-		
	Erp ※6 Annual consumption	kWh	-	-	-	-	491	-		
	Erp ※6 Class		-	-	-	-	B	-		
	POWER FACTOR	%	-	-	-	92	92	92	-	-
	NOISE INDOOR (H/M/L)	dB-A		43/41/36			-			
		Power Level dB		60/58/53			-			
	NOISE OUTDOOR (H/L)	dB-A					50/-			
		Power Level dB					70/-			
HEATING	CAPACITY	kW	7.1	7.1	7.1				1.8	8.1
		BTU/h	24200	24200	24200				6100	27600
	CURRENT	A	1.12	1.08	1.04	9.60	9.20	8.90	-	-
	INPUT POWER	W	140	140	140	1.940k	1.940k	1.940k	-	-
		TOTAL W		-		2.080k	2.080k	2.080k	275	2.780k
	COP/COP CLASS	TOTAL(W/W) ※5(("A"~"G")	-	-	-	3.41	3.41 / B	3.41	6.55	2.91
	Erp ※6 Pdsign	kW	-	-	-	-	5.3	-		
	Erp ※6 Tbivalen	°C	-	-	-	-	-7	-		
	Erp ※6 SCOP	(W/W)	-	-	-	-	3.8	-		
	Erp ※6 Annual consumption	kWh	-	-	-	-	1952	-		
	Erp ※6 Class		-	-	-	-	A	-		
	POWER FACTOR	%	-	-	-	92	92	91	-	-
	NOISE INDOOR (H/M/L)	dB-A		43/41/36			-		/	/
		Power Level dB		60/58/53			-			
	NOISE OUTDOOR (H/L)	dB-A		-			52/-		/	/
		Power Level dB		-			70/-			
EXTRA LOW TEMP	Total CAPACITY(kW)/INPUT POWER(W)/COP					-				
MAX CURRENT(A)/MAX INPUT POWER(W)			1.28/160	1.24/160	1.20/160	18.0/3.640k	18.0/3.810k	18.0/3.970k	/	
STARTING CURRENT(A)/COMP OUTPUT(W)			-	-	-	11.8/2.5k	11.3/2.5k	10.8/2.5k	/	
NETWORK IMPEDANCE (ΩMAX.)				-			-			
FM OUTPUT (W)				120			90		/	
MOISTURE REMOVAL VOLUME		L/h(Pt/h)	4.2		(8.8)		-			
External static pressure		Pa	50 (MIN10 ~ MAX80)							
I/D AIR FLOW	COOL	m^3/min (ft^3/min)	22/20/16 (777/706/565)							
	HEAT	m^3/min (ft^3/min)	22/20/16 (777/706/565)							
O/D AIR FLOW	COOL	m^3/min (ft^3/min)				39		(1377)		
	HEAT	m^3/min (ft^3/min)				39		(1377)		
REFRIGERANT TYPE, AMOUNT g(oz)						R410A	1.70k	(60.0)	/	
PROD IM	HEIGHT : H mm(inch)		250 (9-27/32)			569 (22-13/32)			/	
	WIDTH : W mm(inch)		1000 (+100) (39-5/16) (+3-15/16)			790 (31-7/64)			/	
	DEPTH : D mm(inch)		650 (25-19/32)			285 (11-7/32)			/	
PACK IM	HEIGHT : H mm		338			645			/	
	WIDTH : W mm		1211			921			/	
	DEPTH : D mm		761			386			/	
MASS	(NET) kg(lb)		32 (71)			42 (93)			/	
	(GROSS) kg(lb)		38 (84)			46 (101)			/	
LAYERS LIMIT (actually)			6 (7)			4 (5)				
Operation Condition		Cool O.D(DBT)	18°C ~ 32°C			-10°C ~ 43°C				
		Heat O.D(DBT)	16°C ~ 30°C			-15°C ~ 24°C				
PIPING	PIPE DIAMETER mm (inch)		(Liquid)ø9.52(3/8) (Gas)ø15.88(5/8)			(Liquid)ø9.52(3/8) (Gas)ø15.88(5/8)				
	CONNECT METHOD, STD LENGTH m (ft)		flared type, 5.0(16.4)			flared type, 5.0(16.4)				
	PIPE LENGTH RANGE m (ft)		5 ~ 50 (16.4 ~ 164.0)						~	~
	I/D&O/D HEIGHT DIFFERENCE m (ft)		15 (OD located lower) / 30 (OD located higher) (49.2/98.4)							
	ADD GAS AMOUNT g/m (oz/ft)		40 (0.430)							
	PIPE LENGTH FOR ADDITIONAL GAS m (ft)		20 (65.6)							

*1: In case it is necessary to indicate the air □ow volume in (l/s), the value in (m^3/min.) shall be multiplied by 16.7 and rounded down the decimal point.
*2: If the EUROVENT Certi□ed models can be operated under the □extra-low□temperature condition, -7□C dry bulb and -8□C wet-bulb temperatures with rated voltage 230 V shall be used.
*3: Network Impedance shall be applicable for EUROPE and CHINA models.
*4: The annual consumption is calculated by multiplying the input power at 230 V (400 V) by an average of 500 hours per year in cooling mode.
*5: EER and COP classification is at 230 V (400 V) only in accordance with EU directive 2002/31/EC.
*6: SEER and SCOP classification is at 230V(400V) only in accordance with EN-14825. For heating, SCOP indicates the value of only Average heating season, Other fiche data indicates in an attached sheet.

Single -Type

1-1. Unit Speci□cations

PEY1

5. Ducted Type S-100PN1E5A / U-100PEY1E5

INDOOR		MODEL	S-100PN1E5A							
PANEL		MODEL	-							
OUTDOOR		MODEL				U-100PEY1E5				
Branch pipe		MODEL	-							
PERFORMANCE TEST CONDITION			ISO13253 / EN14511 / EN14825 / EN12102							
POWER SUPPLY		ø, Hz	1ø 50Hz			1ø 50Hz				
		V	220	230	240	220	230	240	Min	Max
COOLING	CAPACITY	kW	10.0	10.0	10.0				2.7	11.5
		BTU/h	34100	34100	34100				9200	39200
	CURRENT	A	1.54	1.48	1.42	16.0	15.3	14.8	-	-
	INPUT POWER	W	205	205	205	3.350k	3.350k	3.350k	-	-
		TOTAL W		-		3.555k	3.555k	3.555k	570	4.300k
	ANNUAL CONSUMPTION	TOTAL kWh ※4		-		-	1778	-	-	-
	EER/EER CLASS	TOTAL(W/W)※5("A"~"G")	-	-	-	2.81	2.81 / C	2.81	4.74	2.67
	Erp ※6 Pdsign	kW	-	-	-	-	10.0	-		
	Erp ※6 SEER	(W/W)	-	-	-	-	5.3	-		
	Erp ※6 Annual consumption	kWh	-	-	-	-	661	-		
	Erp ※6 Class		-	-	-	-	A	-		
	POWER FACTOR	%	-	-	-	95	95	94	-	-
	NOISE INDOOR (H/M/L)	dB-A		44/42/37			-			
		Power Level dB		65/63/58			-			
	NOISE OUTDOOR (H/L)	dB-A					54/-			
		Power Level dB					70/-			
HEATING	CAPACITY	kW	10.0	10.0	10.0				2.1	13.8
		BTU/h	34100	34100	34100				7200	47100
	CURRENT	A	1.54	1.48	1.42	13.0	12.5	12.1	-	-
	INPUT POWER	W	205	205	205	2.730k	2.730k	2.730k	-	-
		TOTAL W		-		2.935k	2.935k	2.935k	450	4.100k
	COP/COP CLASS	TOTAL(W/W)※5("A"~"G")	-	-	-	3.41	3.41 / B	3.41	4.67	3.37
	Erp ※6 Pdsign	kW	-	-	-	-	7.6	-		
	Erp ※6 Tbivalen	°C	-	-	-	-	-10	-		
	Erp ※6 SCOP	(W/W)	-	-	-	-	3.8	-		
	Erp ※6 Annual consumption	kWh	-	-	-	-	2800	-		
	Erp ※6 Class		-	-	-	-	A	-		
	POWER FACTOR	%	-	-	-	95	95	94	-	-
	NOISE INDOOR (H/M/L)	dB-A		44/42/37			-		/	/
		Power Level dB		65/63/58			-			
	NOISE OUTDOOR (H/L)	dB-A		-			54/-		/	/
		Power Level dB		-			70/-			
EXTRA LOW TEMP	Total CAPACITY(kW)/INPUT POWER(W)/COP					-				
MAX CURRENT(A)/MAX INPUT POWER(W)			2.13/275	2.07/275	2.01/275	25.0/5.300k	25.0/5.500k	25.0/5.700k	/	
STARTING CURRENT(A)/COMP OUTPUT(W)			-	-	-	16.0/1.7k	15.3/1.7k	14.8/1.7k	/	
NETWORK IMPEDANCE (ΩMAX.)				-			-			
FM OUTPUT (W)				200			90		/	
MOISTURE REMOVAL VOLUME		L/h(Pt/h)	6.0		(12.6)		-			
External static pressure		Pa	50 (MIN10 ~ MAX80)							
I/D AIR FLOW	COOL	m^3/min (ft^3/min)	36/33/26 (1271/1165/918)							
	HEAT	m^3/min (ft^3/min)	36/33/26 (1271/1165/918)							
O/D AIR FLOW	COOL	m^3/min (ft^3/min)				76		(2684)		
	HEAT	m^3/min (ft^3/min)				67		(2366)		
REFRIGERANT TYPE, AMOUNT g(oz)						R410A	2.60k	(91.7)	/	
PROD	HEIGHT : H mm(inch)		250 (9-27/32)			996 (39-7/32)			/	
	WIDTH : W mm(inch)		1200 (+100) 47-1/4 (+3-15/16)			940 (37-1/32)			/	
	DEPTH : D mm(inch)		650 (25-19/32)			340 (13-13/32)			/	
PACK	HEIGHT : H mm		338			1136			/	
	WIDTH : W mm		1402			1055			/	
	DEPTH : D mm		761			485			/	
MASS	(NET) kg(lb)		41 (91)			73 (161)			/	
	(GROSS) kg(lb)		48 (106)			81 (179)			/	
LAYERS LIMIT (actually)			6 (7)			2 (3)				
Operation Condition		Cool O.D(DBT)	18°C ~ 32°C			-10°C ~ 43°C				
		Heat O.D(DBT)	16°C ~ 30°C			-15°C ~ 24°C				
PIPING	PIPE DIAMETER mm (inch)		(Liquid)ø9.52(3/8) (Gas)ø15.88(5/8)			(Liquid)ø9.52(3/8) (Gas)ø15.88(5/8)				
	CONNECT METHOD, STD LENGTH m (ft)		flared type, 5.0(16.4)			flared type, 5.0(16.4)				
	PIPE LENGTH RANGE m (ft)		5 ~ 50 (16.4 ~ 164.0)						~	~
	I/D&O/D HEIGHT DIFFERENCE m (ft)		15 (OD located lower) / 30 (OD located higher) (49.2/98.4)							
	ADD GAS AMOUNT g/m (oz/ft)		50 (0.538)							
	PIPE LENGTH FOR ADDITIONAL GAS m (ft)		30 (98.4)							

*1: In case it is necessary to indicate the air □ow volume in (l/s), the value in (m^3/min.) shall be multiplied by 16.7 and rounded down the decimal point.
*2: If the EUROVENT Certi□ed models can be operated under the □extra-low□temperature condition, -7□C dry bulb and -8□C wet-bulb temperatures with rated voltage 230 V shall be used.
*3: Network Impedance shall be applicable for EUROPE and CHINA models.
*4: The annual consumption is calculated by multiplying the input power at 230 V (400 V) by an average of 500 hours per year in cooling mode.
*5: EER and COP classification is at 230 V (400 V) only in accordance with EU directive 2002/31/EC.
*6: SEER and SCOP classification is at 230V(400V) only in accordance with EN-14825. For heating, SCOP indicates the value of only Average heating season, Other fiche data indicates in an attached sheet.

Single -Type

1-1. Unit Speci□cations

PEY1

5. Ducted Type S-125PN1E5A / U-125PEY1E5

INDOOR		MODEL	S-125PN1E5A							
PANEL		MODEL	-							
OUTDOOR		MODEL				U-125PEY1E5				
Branch pipe		MODEL	-							
PERFORMANCE TEST CONDITION			ISO13253 / EN14511 / EN12102							
POWER SUPPLY		ø, Hz	1ø 50Hz			1ø 50Hz				
		V	220	230	240	220	230	240	Min	Max
COOLING	CAPACITY	kW	12.5	12.5	12.5				3.8	13.5
		BTU/h	42700	42700	42700				13000	48100
	CURRENT	A	1.74	1.67	1.61	20.1	19.3	18.7	-	-
	INPUT POWER	W	225	225	225	4.220k	4.220k	4.220k	-	-
		TOTAL W		-		4.445k	4.445k	4.445k	950	5.200k
	ANNUAL CONSUMPTION	TOTAL kWh ※4		-		-	2223	-	-	-
	EER/EER CLASS	TOTAL(W/W)※5/("A"~"G")	-	-	-	2.81	2.81 / C	2.81	4.00	2.60
	Erp ※6 Pdsign	kW	-	-	-	-	-	-		
	Erp ※6 SEER	(W/W)	-	-	-	-	-	-		
	Erp ※6 Annual consumption	kWh	-	-	-	-	-	-		
	Erp ※6 Class		-	-	-	-	-	-		
	POWER FACTOR	%	-	-	-	95	95	94	-	-
	NOISE INDOOR (H/M/L)	dB-A		45/43/38			-			
		Power Level dB		66/64/59			-			
	NOISE OUTDOOR (H/L)	dB-A					56/-			
		Power Level dB					73/-			
HEATING	CAPACITY	kW	12.5	12.5	12.5				3.4	15.0
		BTU/h	42700	42700	42700				11600	51200
	CURRENT	A	1.74	1.67	1.61	16.5	15.8	15.2	-	-
	INPUT POWER	W	225	225	225	3.440k	3.440k	3.440k	-	-
		TOTAL W		-		3.665k	3.665k	3.665k	780	4.600k
	COP/COP CLASS	TOTAL(W/W)※5/("A"~"G")	-	-	-	3.41	3.41 / B	3.41	4.36	3.26
	Erp ※6 Pdsign	kW	-	-	-	-	-	-		
	Erp ※6 Tbivalen	°C	-	-	-	-	-	-		
	Erp ※6 SCOP	(W/W)	-	-	-	-	-	-		
	Erp ※6 Annual consumption	kWh	-	-	-	-	-	-		
	Erp ※6 Class		-	-	-	-	-	-		
	POWER FACTOR	%	-	-	-	95	95	94	-	-
	NOISE INDOOR (H/M/L)	dB-A		45/43/38			-		/	/
		Power Level dB		66/64/59			-			
	NOISE OUTDOOR (H/L)	dB-A		-			56/-		/	/
		Power Level dB		-			73/-			
EXTRA LOW TEMP	Total CAPACITY(kW)/INPUT POWER(W)/COP					-				
MAX CURRENT(A)/MAX INPUT POWER(W)			2.36/300	2.30/300	2.24/300	29.0/6.000k	29.0/6.300k	29.0/6.600k	/	
STARTING CURRENT(A)/COMP OUTPUT(W)			-	-	-	20.1/3.0k	19.3/3.0k	18.7/3.0k	/	
NETWORK IMPEDANCE (ΩMAX.)				-			-			
FM OUTPUT (W)				200			90		/	
MOISTURE REMOVAL VOLUME		L/h(Pt/h)	7.9		(16.6)		-			
External static pressure		Pa	50 (MIN10 ~ MAX80)							
I/D AIR FLOW	COOL	m^3/min (ft^3/min)	38/35/28 (1342/1236/989)							
	HEAT	m^3/min (ft^3/min)	38/35/28 (1342/1236/989)							
O/D AIR FLOW	COOL	m^3/min (ft^3/min)				80		(2825)		
	HEAT	m^3/min (ft^3/min)				73		(2578)		
REFRIGERANT TYPE, AMOUNT g(oz)						R410A	3.20k	(112.9)	/	
PROD PACK	HEIGHT : H mm(inch)		250 (9-27/32)			996 (39-7/32)			/	
	WIDTH : W mm(inch)		1200 (+100) 47-1/4 (+3-15/16)			940 (37-1/32)			/	
	DEPTH : D mm(inch)		650 (25-19/32)			340 (13-13/32)			/	
	HEIGHT : H mm		338			1136			/	
	WIDTH : W mm		1402			1055			/	
	DEPTH : D mm		761			485			/	
MASS	(NET) kg(lb)		41 (91)			85 (187)			/	
	(GROSS) kg(lb)		48 (106)			93 (205)			/	
LAYERS LIMIT (actually)			6 (7)			2 (3)				
Operation Condition		Cool O.D(DBT)	18°C ~ 32°C			-10°C ~ 43°C				
		Heat O.D(DBT)	16°C ~ 30°C			-15°C ~ 24°C				
PIPING	PIPE DIAMETER mm (inch)		(Liquid)ø9.52(3/8) (Gas)ø15.88(5/8)			(Liquid)ø9.52(3/8) (Gas)ø15.88(5/8)				
	CONNECT METHOD, STD LENGTH m (ft)		flared type, 5.0(16.4)			flared type, 5.0(16.4)				
	PIPE LENGTH RANGE m (ft)		5 ~ 50 (16.4 ~ 164.0)						~	~
	I/D&O/D HEIGHT DIFFERENCE m (ft)		15 (OD located lower) / 30 (OD located higher) (49.2/98.4)							
	ADD GAS AMOUNT g/m (oz/ft)		50 (0.538)							
	PIPE LENGTH FOR ADDITIONAL GAS m (ft)		30 (98.4)							

*1: In case it is necessary to indicate the air □ow volume in (l/s), the value in (m^3/min.) shall be multiplied by 16.7 and rounded down the decimal point.
*2: If the EUROVENT Certi□ed models can be operated under the □extra-low□temperature condition, -7□C dry bulb and -8□C wet-bulb temperatures with rated voltage 230 V shall be used.
*3: Network Impedance shall be applicable for EUROPE and CHINA models.
*4: The annual consumption is calculated by multiplying the input power at 230 V (400 V) by an average of 500 hours per year in cooling mode.
*5: EER and COP classification is at 230 V (400 V) only in accordance with EU directive 2002/31/EC.
*6: SEER and SCOP classification is at 230V(400V) only in accordance with EN-14825. For heating, SCOP indicates the value of only Average heating season, Other fiche data indicates in an attached sheet.

Simultaneous (Twin) -Type

1-1. Unit Speci□cations

PEY1

5. Ducted Type S-50PN1E5A×2 / U-100PEY1E8

INDOOR		MODEL	S-50PN1E5A×2							
PANEL		MODEL	-							
OUTDOOR		MODEL				U-100PEY1E8				
Branch pipe		MODEL	CZ-P155BK1							
PERFORMANCE TEST CONDITION			ISO13253 / EN14511 / EN14825 / EN12102							
POWER SUPPLY		ø, Hz	1ø 50Hz			3ø 50Hz				
		V	220	230	240	380	400	415	Min	Max
COOLING	CAPACITY	kW	10.0	10.0	10.0				2.7	11.5
		BTU/h	34100	34100	34100				9200	39200
	CURRENT	A	0.54×2	0.55×2	0.56×2	5.45	5.20	5.00	-	-
	INPUT POWER	W	115×2	120×2	125×2	3.320k	3.320k	3.320k	-	-
		TOTAL W		-		3.550k	3.560k	3.570k	570	4.300k
	ANNUAL CONSUMPTION	TOTAL kWh ※4		-		-	1780	-	-	-
	EER/EER CLASS	TOTAL(W/W)※5/("A"~"G")	-	-	-	2.82	2.81 / C	2.80	4.74	2.67
	Erp ※6 Pdsign	kW	-	-	-	-	10.0	-		
	Erp ※6 SEER	(W/W)	-	-	-	-	4.8	-		
	Erp ※6 Annual consumption	kWh	-	-	-	-	728	-		
	Erp ※6 Class		-	-	-	-	B	-		
	POWER FACTOR	%	-	-	-	93	92	92	-	-
	NOISE INDOOR (H/M/L)	dB-A		41/39/35			-			
		Power Level dB		58/56/52			-			
	NOISE OUTDOOR (H/L)	dB-A					54/-			
		Power Level dB					70/-			
HEATING	CAPACITY	kW	10.0	10.0	10.0				2.1	13.8
		BTU/h	34100	34100	34100				7200	47100
	CURRENT	A	0.54×2	0.55×2	0.56×2	4.40	4.20	4.00	-	-
	INPUT POWER	W	115×2	120×2	125×2	2.690k	2.690k	2.690k	-	-
		TOTAL W		-		2.920k	2.930k	2.940k	450	4.100k
	COP/COP CLASS	TOTAL(W/W)※5/("A"~"G")	-	-	-	3.42	3.41 / B	3.40	4.67	3.37
	Erp ※6 Pdsign	kW	-	-	-	-	7.5	-		
	Erp ※6 Tbivalen	°C	-	-	-	-	-9	-		
	Erp ※6 SCOP	(W/W)	-	-	-	-	3.8	-		
	Erp ※6 Annual consumption	kWh	-	-	-	-	2761	-		
	Erp ※6 Class		-	-	-	-	A	-		
	POWER FACTOR	%	-	-	-	93	93	94	-	-
	NOISE INDOOR (H/M/L)	dB-A		41/39/35			-		/	/
		Power Level dB		58/56/52			-			
	NOISE OUTDOOR (H/L)	dB-A		-			54/-		/	/
		Power Level dB		-			70/-			
EXTRA LOW TEMP	Total CAPACITY(kW)/INPUT POWER(W)/COP				-					
MAX CURRENT(A)/MAX INPUT POWER(W)			0.74×2/165×2	0.76×2/180×2	0.78×2/190×2	9.0/5.550k	9.0/5.800k	9.0/6.050k	/	
STARTING CURRENT(A)/COMP OUTPUT(W)			-	-	-	5.45/1.7k	5.20/1.7k	5.00/1.7k	/	
NETWORK IMPEDANCE (ΩMAX.)				-			-			
FM OUTPUT (W)				85×2			90		/	
MOISTURE REMOVAL VOLUME		L/h(Pt/h)	6.0	(3.0×2)	(12.6)		-			
External static pressure		Pa	50 (MIN10 - MAX80)							
I/D AIR FLOW	COOL	m^3/min (ft^3/min)	[16/13/11 (565/459/388)]×2							
	HEAT	m^3/min (ft^3/min)	[16/13/11 (565/459/388)]×2							
O/D AIR FLOW	COOL	m^3/min (ft^3/min)				76		(2684)		
	HEAT	m^3/min (ft^3/min)				67		(2366)		
REFRIGERANT TYPE, AMOUNT g(oz)						R410A	2.60k	(91.7)	/	
PROD PACM	HEIGHT : H mm(inch)		250 (9-27/32)			996 (39-7/32)			/	
	WIDTH : W mm(inch)		780 (+100) 30-23/32 (+3-15/16)			940 (37-1/32)			/	
	DEPTH : D mm(inch)		650 (25-19/32)			340 (13-13/32)			/	
	HEIGHT : H mm		345			1136			/	
	WIDTH : W mm		1007			1055			/	
	DEPTH : D mm		777			485			/	
MASS	(NET) kg(lb)		29 (64)			73 (161)			/	
	(GROSS) kg(lb)		34 (75)			81 (179)			/	
LAYERS LIMIT (actually)			8 (9)			2 (3)				
Operation Condition		Cool O.D(DBT)	18°C ~ 32°C			-10°C ~ 43°C				
		Heat O.D(DBT)	16°C ~ 30°C			-15°C ~ 24°C				
PIPING	PIPE DIAMETER mm (inch)		(Liquid)ø6.35(1/4) (Gas)ø12.7(1/2)			(Liquid)ø9.52(3/8) (Gas)ø15.88(5/8)				
	CONNECT METHOD, STD LENGTH m (ft)		flared type, 5.0(16.4)			flared type, 5.0(16.4)				
	PIPE LENGTH RANGE m (ft)		5 ~ 50 (16.4 ~ 164.0)						~	~
	I/D&O/D HEIGHT DIFFERENCE m (ft)		15 (OD located lower) / 30 (OD located higher) (49.2/98.4)							
	ADD GAS AMOUNT g/m (oz/ft)		50 (0.538)							
	PIPE LENGTH FOR ADDITIONAL GAS m (ft)		30 (98.4)							

*1: In case it is necessary to indicate the air □ow volume in (l/s), the value in (m^3/min.) shall be multiplied by 16.7 and rounded down the decimal point.
*2: If the EUROVENT Certi□ed models can be operated under the □extra-low□temperature condition, -7□C dry bulb and -8□C wet-bulb temperatures with rated voltage 230 V shall be used.
*3: Network Impedance shall be applicable for EUROPE and CHINA models.
*4: The annual consumption is calculated by multiplying the input power at 230 V (400 V) by an average of 500 hours per year in cooling mode.
*5: EER and COP classification is at 230 V (400 V) only in accordance with EU directive 2002/31/EC.
*6: SEER and SCOP classification is at 230V(400V) only in accordance with EN-14825. For heating, SCOP indicates the value of only Average heating season, Other fiche data indicates in an attached sheet.

Simultaneous (Twin) -Type

1-1. Unit Speci□cations

PEY1

5. Ducted Type S-60PN1E5A×2 / U-125PEY1E8

INDOOR		MODEL	S-60PN1E5A×2							
PANEL		MODEL	-							
OUTDOOR		MODEL				U-125PEY1E8				
Branch pipe		MODEL	CZ-P155BK1							
PERFORMANCE TEST CONDITION			ISO13253 / EN14511 / EN12102							
POWER SUPPLY		ø, Hz	1ø 50Hz			3ø 50Hz				
		V	220	230	240	380	400	415	Min	Max
COOLING	CAPACITY	kW	12.5	12.5	12.5				3.8	13.5
		BTU/h	42700	42700	42700				13000	46100
	CURRENT	A	1.12×2	1.08×2	1.04×2	6.75	6.40	6.20	-	-
	INPUT POWER	W	140×2	140×2	140×2	4.165k	4.165k	4.165k	-	-
		TOTAL W		-		4.445k	4.445k	4.445k	950	5.200k
	ANNUAL CONSUMPTION	TOTAL kWh ※4		-		-	2223	-	-	-
	EER/EER CLASS	TOTAL(W/W)※5("A"~"G")	-	-	-	2.81	2.81 / C	2.81	4.00	2.60
	Erp ※6 Pdsign	kW	-	-	-	-	-	-		
	Erp ※6 SEER	(W/W)	-	-	-	-	-	-		
	Erp ※6 Annual consumption	kWh	-	-	-	-	-	-		
	Erp ※6 Class		-	-	-	-	-	-		
	POWER FACTOR	%	-	-	-	94	94	94	-	-
	NOISE INDOOR (H/M/L)	dB-A		43/41/36			-			
		Power Level dB		60/58/53			-			
	NOISE OUTDOOR (H/L)	dB-A					56/-			
		Power Level dB					73/-			
HEATING	CAPACITY	kW	12.5	12.5	12.5				3.4	15.0
		BTU/h	42700	42700	42700				11600	51200
	CURRENT	A	1.12×2	1.08×2	1.04×2	5.45	5.20	5.00	-	-
	INPUT POWER	W	140×2	140×2	140×2	3.385k	3.385k	3.385k	-	-
		TOTAL W		-		3.665k	3.665k	3.665k	780	4.600k
	COP/COP CLASS	TOTAL(W/W)※5("A"~"G")	-	-	-	3.41	3.41 / B	3.41	4.36	3.26
	Erp ※6 Pdsign	kW	-	-	-	-	-	-		
	Erp ※6 Tbivalen	°C	-	-	-	-	-	-		
	Erp ※6 SCOP	(W/W)	-	-	-	-	-	-		
	Erp ※6 Annual consumption	kWh	-	-	-	-	-	-		
	Erp ※6 Class		-	-	-	-	-	-		
	POWER FACTOR	%	-	-	-	94	94	94	-	-
	NOISE INDOOR (H/M/L)	dB-A		43/41/36			-		/	/
		Power Level dB		60/58/53			-			
	NOISE OUTDOOR (H/L)	dB-A		-			56/-		/	/
		Power Level dB		-			73/-			
EXTRA LOW TEMP	Total CAPACITY(kW)/INPUT POWER(W)/COP					-				
MAX CURRENT(A)/MAX INPUT POWER(W)			1.28×2/160×2	1.24×2/160×2	1.20×2/160×2	10.0/6.200k	10.0/6.500k	10.0/6.750k	/	
STARTING CURRENT(A)/COMP OUTPUT(W)			-	-	-	6.75/3.0k	6.40/3.0k	6.20/3.0k	/	
NETWORK IMPEDANCE (ΩMAX.)				-			-			
FM OUTPUT (W)				120×2			90		/	
MOISTURE REMOVAL VOLUME		L/h(Pt/h)	7.9	(3.95×2)	(16.6)		-			
External static pressure		Pa	50 (MIN10 ~ MAX80)							
I/D AIR FLOW	COOL	m^3/min (ft^3/min)	[22/20/16 (777/706/565)]×2							
	HEAT	m^3/min (ft^3/min)	[22/20/16 (777/706/565)]×2							
O/D AIR FLOW	COOL	m^3/min (ft^3/min)				80		(2825)		
	HEAT	m^3/min (ft^3/min)				73		(2578)		
REFRIGERANT TYPE, AMOUNT g(oz)						R410A	3.20k	(112.9)	/	
PROD IM	HEIGHT : H mm(inch)		250 (9-27/32)			996 (39-7/32)			/	
	WIDTH : W mm(inch)		1000 (+100) (39-5/16) (+3-15/16)			940 (37-1/32)			/	
	DEPTH : D mm(inch)		650 (25-19/32)			340 (13-13/32)			/	
PACK DIM	HEIGHT : H mm		338			1136			/	
	WIDTH : W mm		1211			1055			/	
	DEPTH : D mm		761			485			/	
MASS	(NET) kg(lb)		32 (71)			85 (188)			/	
	(GROSS) kg(lb)		38 (84)			93 (205)			/	
LAYERS LIMIT (actually)			6 (7)			2 (3)				
Operation Condition		Cool O.D(DBT)	18°C ~ 32°C			-10°C ~ 43°C				
		Heat O.D(DBT)	16°C ~ 30°C			-15°C ~ 24°C				
PIPING	PIPE DIAMETER mm (inch)		(Liquid)ø9.52(3/8) (Gas)ø15.88(5/8)			(Liquid)ø9.52(3/8) (Gas)ø15.88(5/8)				
	CONNECT METHOD, STD LENGTH m (ft)		flared type, 5.0(16.4)			flared type, 5.0(16.4)				
	PIPE LENGTH RANGE m (ft)		5 ~ 50 (16.4 ~ 164.0)						~	~
	I/D&O/D HEIGHT DIFFERENCE m (ft)		15 (OD located lower) / 30 (OD located higher) (49.2/98.4)							
	ADD GAS AMOUNT g/m (oz/ft)		50 (0.538)							
	PIPE LENGTH FOR ADDITIONAL GAS m (ft)		30 (98.4)							

*1: In case it is necessary to indicate the air □ow volume in (l/s), the value in (m^3/min.) shall be multiplied by 16.7 and rounded down the decimal point.
*2: If the EUROVENT Certi□ed models can be operated under the □extra-low□temperature condition, -7□C dry bulb and -8□C wet-bulb temperatures with rated voltage 230 V shall be used.
*3: Network Impedance shall be applicable for EUROPE and CHINA models.
*4: The annual consumption is calculated by multiplying the input power at 230 V (400 V) by an average of 500 hours per year in cooling mode.
*5: EER and COP classification is at 230 V (400 V) only in accordance with EU directive 2002/31/EC.
*6: SEER and SCOP classification is at 230V(400V) only in accordance with EN-14825. For heating, SCOP indicates the value of only Average heating season, Other fiche data indicates in an attached sheet.

Simultaneous (Twin) -Type

1-1. Unit Speci□cations

PEY1

5. Ducted Type S-71PN1E5A×2 / U-140PEY1E8

INDOOR		MODEL	S-71PN1E5A×2							
PANEL		MODEL	-							
OUTDOOR		MODEL				U-140PEY1E8				
Branch pipe		MODEL	CZ-P155BK1							
PERFORMANCE TEST CONDITION			ISO13253 / EN14511 / EN12102							
POWER SUPPLY		ø, Hz	1ø 50Hz			3ø 50Hz				
		V	220	230	240	380	400	415	Min	Max
COOLING	CAPACITY	kW	14.0	14.0	14.0				3.3	15.5
		BTU/h	47800	47800	47800				11300	52900
	CURRENT	A	1.12×2	1.08×2	1.04×2	7.05	6.70	6.45	-	-
	INPUT POWER	W	140×2	140×2	140×2	4.450k	4.450k	4.450k	-	-
		TOTAL W		-		4.730k	4.730k	4.730k	840	6.000k
	ANNUAL CONSUMPTION	TOTAL kWh ※4		-		-	2365	-	-	-
	EER/EER CLASS	TOTAL(W/W) ※5/("A"~"G")	-	-	-	2.96	2.96 / A	2.96	3.93	2.58
	Erp ※6 Pdsign	kW	-	-	-	-	-	-		
	Erp ※6 SEER	(W/W)	-	-	-	-	-	-		
	Erp ※6 Annual consumption	kWh	-	-	-	-	-	-		
	Erp ※6 Class		-	-	-	-	-	-		
	POWER FACTOR	%	-	-	-	96	96	96	-	-
	NOISE INDOOR (H/M/L)	dB-A		43/41/36			-			
		Power Level dB		60/58/53			-			
	NOISE OUTDOOR (H/L)	dB-A					54/-			
		Power Level dB					71/-			
HEATING	CAPACITY	kW	14.0	14.0	14.0				4.1	16.0
		BTU/h	47800	47800	47800				14000	54600
	CURRENT	A	1.12×2	1.08×2	1.04×2	5.90	5.60	5.40	-	-
	INPUT POWER	W	140×2	140×2	140×2	3.730k	3.730k	3.730k	-	-
		TOTAL W		-		4.010k	4.010k	4.010k	900	5.200k
	COP/COP CLASS	TOTAL(W/W) ※5/("A"~"G")	-	-	-	3.49	3.49 / A	3.49	4.56	3.08
	Erp ※6 Pdsign	kW	-	-	-	-	-	-		
	Erp ※6 Tbivalen	°C	-	-	-	-	-	-		
	Erp ※6 SCOP	(W/W)	-	-	-	-	-	-		
	Erp ※6 Annual consumption	kWh	-	-	-	-	-	-		
	Erp ※6 Class		-	-	-	-	-	-		
	POWER FACTOR	%	-	-	-	96	96	96	-	-
	NOISE INDOOR (H/M/L)	dB-A		43/41/36			-		/	/
		Power Level dB		60/58/53			-			
	NOISE OUTDOOR (H/L)	dB-A		-			53/-		/	/
		Power Level dB		-			70/-			
EXTRA LOW TEMP	Total CAPACITY(kW)/INPUT POWER(W)/COP				-					
MAX CURRENT(A)/MAX INPUT POWER(W)			1.28×2/160×2	1.24×2/160×2	1.20×2/160×2	10.0/6.200k	10.0/6.500k	10.0/6.750k	/	
STARTING CURRENT(A)/COMP OUTPUT(W)			-	-	-	7.05/3.0k	6.70/3.0k	6.45/3.0k	/	
NETWORK IMPEDANCE (ΩMAX.)				-			-			
FM OUTPUT (W)				120			90×2		/	
MOISTURE REMOVAL VOLUME		L/h(Pt/h)	9.0	(4.5×2)	(18.9)		-			
External static pressure		Pa		50 (MIN10 - MAX80)						
I/D AIR FLOW	COOL	m^3/min (ft^3/min)		[22/20/16 (777/706/565)]×2						
	HEAT	m^3/min (ft^3/min)		[22/20/16 (777/706/565)]×2						
O/D AIR FLOW	COOL	m^3/min (ft^3/min)				135		(4767)		
	HEAT	m^3/min (ft^3/min)				120		(4238)		
REFRIGERANT TYPE, AMOUNT g(oz)						R410A	3.40k	(119.9)	/	
PROD IM	HEIGHT : H mm(inch)			250 (9-27/32)			1416 (55-3/4)		/	
	WIDTH : W mm(inch)			1000 (+100) (39-5/16) (+3-15/16)			940 (37-1/32)		/	
	DEPTH : D mm(inch)			650 (25-19/32)			340 (13-13/32)		/	
PACK IM	HEIGHT : H mm			338			1556		/	
	WIDTH : W mm			1211			1055		/	
	DEPTH : D mm			761			485		/	
MASS	(NET) kg(lb)			32 (71)			98 (216)		/	
	(GROSS) kg(lb)			38 (84)			108 (238)		/	
LAYERS LIMIT (actually)				6 (7)			1 (2)			
Operation Condition		Cool O.D(DBT)		18°C ~ 32°C			-10°C ~ 43°C			
		Heat O.D(DBT)		16°C ~ 30°C			-15°C ~ 24°C			
PIPING	PIPE DIAMETER mm (inch)		(Liquid)ø9.52(3/8) (Gas)ø15.88(5/8)			(Liquid)ø9.52(3/8) (Gas)ø15.88(5/8)				
	CONNECT METHOD, STD LENGTH m (ft)		flared type, 5.0(16.4)			flared type, 5.0(16.4)				
	PIPE LENGTH RANGE m (ft)			5 ~ 50 (16.4 ~ 164.0)					~	~
	I/D&O/D HEIGHT DIFFERENCE m (ft)		15 (OD located lower) / 30 (OD located higher) (49.2/98.4)							
	ADD GAS AMOUNT g/m (oz/ft)			50 (0.538)						
	PIPE LENGTH FOR ADDITIONAL GAS m (ft)			30 (98.4)						

*1: In case it is necessary to indicate the air □ow volume in (l/s), the value in (m^3/min.) shall be multiplied by 16.7 and rounded down the decimal point.
*2: If the EUROVENT Certi□ed models can be operated under the □extra-low□temperature condition, -7□C dry bulb and -8□C wet-bulb temperatures with rated voltage 230 V shall be used.
*3: Network Impedance shall be applicable for EUROPE and CHINA models.
*4: The annual consumption is calculated by multiplying the input power at 230 V (400 V) by an average of 500 hours per year in cooling mode.
*5: EER and COP classification is at 230 V (400 V) only in accordance with EU directive 2002/31/EC.
*6: SEER and SCOP classification is at 230V(400V) only in accordance with EN-14825. For heating, SCOP indicates the value of only Average heating season, Other fiche data indicates in an attached sheet.

Single -Type

1-1. Unit Speci□cations

PEY1

5. Ducted Type S-100PN1E5A / U-100PEY1E8

INDOOR		MODEL	S-100PN1E5A							
PANEL		MODEL	-							
OUTDOOR		MODEL				U-100PEY1E8				
Branch pipe		MODEL	-							
PERFORMANCE TEST CONDITION			ISO13253 / EN14511 / EN14825 / EN12102							
POWER SUPPLY		ø, Hz	1ø 50Hz			3ø 50Hz				
		V	220	230	240	380	400	415	Min	Max
COOLING	CAPACITY	kW	10.0	10.0	10.0				2.7	11.5
		BTU/h	34100	34100	34100				9200	39200
	CURRENT	A	1.54	1.48	1.42	5.45	5.20	5.05	-	-
	INPUT POWER	W	205	205	205	3.350k	3.350k	3.350k	-	-
		TOTAL W		-		3.555k	3.555k	3.555k	570	4.300k
	ANNUAL CONSUMPTION	TOTAL kWh ※4		-		-	1778	-	-	-
	EER/EER CLASS	TOTAL(W/W)※5/("A"~"G")	-	-	-	2.81	2.81 / C	2.81	4.74	2.67
	Erp ※6 Pdsign	kW	-	-	-	-	10.0	-		
	Erp ※6 SEER	(W/W)	-	-	-	-	5.2	-		
	Erp ※6 Annual consumption	kWh	-	-	-	-	677	-		
	Erp ※6 Class		-	-	-	-	A	-		
	POWER FACTOR	%	-	-	-	94	93	92	-	-
	NOISE INDOOR (H/M/L)	dB-A		44/42/37			-			
		Power Level dB		65/63/58			-			
	NOISE OUTDOOR (H/L)	dB-A					54/-			
		Power Level dB					70/-			
HEATING	CAPACITY	kW	10.0	10.0	10.0				2.1	13.8
		BTU/h	34100	34100	34100				7200	47100
	CURRENT	A	1.54	1.48	1.42	4.45	4.25	4.10	-	-
	INPUT POWER	W	205	205	205	2.730k	2.730k	2.730k	-	-
		TOTAL W		-		2.935k	2.935k	2.935k	450	4.100k
	COP/COP CLASS	TOTAL(W/W)※5/("A"~"G")	-	-	-	3.41	3.41 / B	3.41	4.67	3.37
	Erp ※6 Pdsign	kW	-	-	-	-	7.6	-		
	Erp ※6 Tbivalen	°C	-	-	-	-	-10	-		
	Erp ※6 SCOP	(W/W)	-	-	-	-	3.8	-		
	Erp ※6 Annual consumption	kWh	-	-	-	-	2800	-		
	Erp ※6 Class		-	-	-	-	A	-		
	POWER FACTOR	%	-	-	-	93	93	93	-	-
	NOISE INDOOR (H/M/L)	dB-A		44/42/37			-		/	/
		Power Level dB		65/63/58			-			
	NOISE OUTDOOR (H/L)	dB-A		-			54/-		/	/
		Power Level dB		-			70/-			
EXTRA LOW TEMP	Total CAPACITY(kW)/INPUT POWER(W)/COP					-				
MAX CURRENT(A)/MAX INPUT POWER(W)			2.13/275	2.07/275	2.01/275	9.0/5.550k	9.0/5.800k	9.0/6.050k	/	
STARTING CURRENT(A)/COMP OUTPUT(W)			-	-	-	5.45/1.7k	5.20/1.7k	5.05/1.7k	/	
NETWORK IMPEDANCE (ΩMAX.)				-			-			
FM OUTPUT (W)				200			90		/	
MOISTURE REMOVAL VOLUME		L/h(Pt/h)	6.0		(12.6)		-			
External static pressure		Pa	50 (MIN10 ~ MAX80)							
I/D AIR FLOW	COOL	m^3/min (ft^3/min)	36/33/26 (1271/1165/918)							
	HEAT	m^3/min (ft^3/min)	36/33/26 (1271/1165/918)							
O/D AIR FLOW	COOL	m^3/min (ft^3/min)				76		(2684)		
	HEAT	m^3/min (ft^3/min)				67		(2366)		
REFRIGERANT TYPE, AMOUNT g(oz)						R410A	2.60k	(91.7)	/	
PROD	HEIGHT : H mm(inch)		250 (9-27/32)			996 (39-7/32)			/	
	WIDTH : W mm(inch)		1200 (+100) (47-1/4) (+3-15/16)			940 (37-1/32)			/	
	DEPTH : D mm(inch)		650 (25-19/32)			340 (13-13/32)			/	
PACK	HEIGHT : H mm		338			1136			/	
	WIDTH : W mm		1402			1055			/	
	DEPTH : D mm		761			485			/	
MASS	(NET) kg(lb)		41 (91)			73 (161)			/	
	(GROSS) kg(lb)		48 (106)			81 (179)			/	
LAYERS LIMIT (actually)			6 (7)			2 (3)				
Operation Condition		Cool O.D(DBT)	18°C ~ 32°C			-10°C ~ 43°C				
		Heat O.D(DBT)	16°C ~ 30°C			-15°C ~ 24°C				
PIPING	PIPE DIAMETER mm (inch)		(Liquid)ø9.52(3/8) (Gas)ø15.88(5/8)			(Liquid)ø9.52(3/8) (Gas)ø15.88(5/8)				
	CONNECT METHOD, STD LENGTH m (ft)		flared type, 5.0(16.4)			flared type, 5.0(16.4)				
	PIPE LENGTH RANGE m (ft)		5 ~ 50 (16.4 ~ 164.0)						~	~
	I/D&O/D HEIGHT DIFFERENCE m (ft)		15 (OD located lower) / 30 (OD located higher) (49.2/98.4)							
	ADD GAS AMOUNT g/m (oz/ft)		50 (0.538)							
	PIPE LENGTH FOR ADDITIONAL GAS m (ft)		30 (98.4)							

*1: In case it is necessary to indicate the air □ow volume in (l/s), the value in (m^3/min.) shall be multiplied by 16.7 and rounded down the decimal point.
*2: If the EUROVENT Certi□ed models can be operated under the □extra-low□temperature condition, -7□C dry bulb and -8□C wet-bulb temperatures with rated voltage 230 V shall be used.
*3: Network Impedance shall be applicable for EUROPE and CHINA models.
*4: The annual consumption is calculated by multiplying the input power at 230 V (400 V) by an average of 500 hours per year in cooling mode.
*5: EER and COP classification is at 230 V (400 V) only in accordance with EU directive 2002/31/EC.
*6: SEER and SCOP classification is at 230V(400V) only in accordance with EN-14825. For heating, SCOP indicates the value of only Average heating season, Other fiche data indicates in an attached sheet.

Single -Type

1-1. Unit Speci□cations

PEY1

5. Ducted Type S-125PN1E5A / U-125PEY1E8

INDOOR		MODEL	S-125PN1E5A							
PANEL		MODEL	-							
OUTDOOR		MODEL				U-125PEY1E8				
Branch pipe		MODEL	-							
PERFORMANCE TEST CONDITION			ISO13253 / EN14511 / EN12102							
POWER SUPPLY		ø, Hz	1ø 50Hz			3ø 50Hz				
		V	220	230	240	380	400	415	Min	Max
COOLING	CAPACITY	kW	12.5	12.5	12.5				3.8	13.5
		BTU/h	42700	42700	42700				13000	46100
	CURRENT	A	1.74	1.67	1.61	6.85	6.50	6.25	-	-
	INPUT POWER	W	225	225	225	4.220k	4.220k	4.220k	-	-
		TOTAL W		-		4.445k	4.445k	4.445k	950	5.200k
	ANNUAL CONSUMPTION	TOTAL kWh ※4		-		-	2223	-	-	-
	EER/EER CLASS	TOTAL(W/W)※5/("A"~"G")	-	-	-	2.81	2.81 / C	2.81	4.00	2.60
	Erp ※6 Pdsign	kW	-	-	-	-	-	-		
	Erp ※6 SEER	(W/W)	-	-	-	-	-	-		
	Erp ※6 Annual consumption	kWh	-	-	-	-	-	-		
	Erp ※6 Class		-	-	-	-	-	-		
	POWER FACTOR	%	-	-	-	94	94	94	-	-
	NOISE INDOOR (H/M/L)	dB-A		45/43/38			-			
		Power Level dB		66/64/59			-			
	NOISE OUTDOOR (H/L)	dB-A					56/-			
		Power Level dB					73/-			
HEATING	CAPACITY	kW	12.5	12.5	12.5				3.4	15.0
		BTU/h	42700	42700	42700				11600	51200
	CURRENT	A	1.74	1.67	1.61	5.55	5.30	5.10	-	-
	INPUT POWER	W	225	225	225	3.440k	3.440k	3.440k	-	-
		TOTAL W		-		3.665k	3.665k	3.665k	780	4.600k
	COP/COP CLASS	TOTAL(W/W)※5/("A"~"G")	-	-	-	3.41	3.41 / B	3.41	4.36	3.26
	Erp ※6 Pdsign	kW	-	-	-	-	-	-		
	Erp ※6 Tbivalen	°C	-	-	-	-	-	-		
	Erp ※6 SCOP	(W/W)	-	-	-	-	-	-		
	Erp ※6 Annual consumption	kWh	-	-	-	-	-	-		
	Erp ※6 Class		-	-	-	-	-	-		
	POWER FACTOR	%	-	-	-	94	94	94	-	-
	NOISE INDOOR (H/M/L)	dB-A		45/43/38			-		/	/
		Power Level dB		66/64/59			-			
	NOISE OUTDOOR (H/L)	dB-A		-			56/-		/	/
		Power Level dB		-			73/-			
EXTRA LOW TEMP	Total CAPACITY(kW)/INPUT POWER(W)/COP					-				
MAX CURRENT(A)/MAX INPUT POWER(W)			2.36/300	2.30/300	2.24/300	10.0/6.200k	10.0/6.500k	10.0/6.750k	/	
STARTING CURRENT(A)/COMP OUTPUT(W)			-	-	-	6.85/3.0k	6.50/3.0k	6.25/3.0k	/	
NETWORK IMPEDANCE (ΩMAX.)				-			-			
FM OUTPUT (W)				200			90		/	
MOISTURE REMOVAL VOLUME		L/h(Pt/h)	7.9		(16.6)		-			
External static pressure		Pa	50 (MIN10 ~ MAX80)							
I/D AIR FLOW	COOL	m^3/min (ft^3/min)	38/35/28 (1342/1236/989)							
	HEAT	m^3/min (ft^3/min)	38/35/28 (1342/1236/989)							
O/D AIR FLOW	COOL	m^3/min (ft^3/min)				80		(2825)		
	HEAT	m^3/min (ft^3/min)				73		(2578)		
REFRIGERANT TYPE, AMOUNT g(oz)						R410A	3.20k	(112.9)	/	
PROD	HEIGHT : H mm(inch)		250 (9-27/32)			996 (39-7/32)			/	
	WIDTH : W mm(inch)		1200 (+100) (47-1/4) (+3-15/16)			940 (37-1/32)			/	
	DEPTH : D mm(inch)		650 (25-19/32)			340 (13-13/32)			/	
PACK	HEIGHT : H mm		338			1136			/	
	WIDTH : W mm		1402			1055			/	
	DEPTH : D mm		761			485			/	
MASS	(NET) kg(lb)		41 (91)			85 (187)			/	
	(GROSS) kg(lb)		48 (106)			93 (205)			/	
LAYERS LIMIT (actually)			6 (7)			2 (3)				
Operation Condition		Cool O.D(DBT)	18°C ~ 32°C			-10°C ~ 43°C				
		Heat O.D(DBT)	16°C ~ 30°C			-15°C ~ 24°C				
PIPING	PIPE DIAMETER mm (inch)		(Liquid)ø9.52(3/8) (Gas)ø15.88(5/8)			(Liquid)ø9.52(3/8) (Gas)ø15.88(5/8)				
	CONNECT METHOD, STD LENGTH m (ft)		flared type, 5.0(16.4)			flared type, 5.0(16.4)				
	PIPE LENGTH RANGE m (ft)		5 ~ 50 (16.4 ~ 164.0)						~	~
	I/D&O/D HEIGHT DIFFERENCE m (ft)		15 (OD located lower) / 30 (OD located higher) (49.2/98.4)							
	ADD GAS AMOUNT g/m (oz/ft)		50 (0.538)							
	PIPE LENGTH FOR ADDITIONAL GAS m (ft)		30 (98.4)							

*1: In case it is necessary to indicate the air □ow volume in (l/s), the value in (m^3/min.) shall be multiplied by 16.7 and rounded down the decimal point.
*2: If the EUROVENT Certi□ed models can be operated under the □extra-low□temperature condition, -7□C dry bulb and -8□C wet-bulb temperatures with rated voltage 230 V shall be used.
*3: Network Impedance shall be applicable for EUROPE and CHINA models.
*4: The annual consumption is calculated by multiplying the input power at 230 V (400 V) by an average of 500 hours per year in cooling mode.
*5: EER and COP classification is at 230 V (400 V) only in accordance with EU directive 2002/31/EC.
*6: SEER and SCOP classification is at 230V(400V) only in accordance with EN-14825. For heating, SCOP indicates the value of only Average heating season, Other fiche data indicates in an attached sheet.

Single -Type

1-1. Unit Speci□cations

PEY1

5. Ducted Type S-140PN1E5A / U-140PEY1E8

INDOOR		MODEL	S-140PN1E5A							
PANEL		MODEL	-							
OUTDOOR		MODEL				U-140PEY1E8				
Branch pipe		MODEL	-							
PERFORMANCE TEST CONDITION			ISO13253 / EN14511 / EN12102							
POWER SUPPLY		ø, Hz	1ø 50Hz			3ø 50Hz				
		V	220	230	240	380	400	415	Min	Max
COOLING	CAPACITY	kW	14.0	14.0	14.0				3.3	15.5
		BTU/h	47800	47800	47800				11300	52900
	CURRENT	A	1.89	1.82	1.74	7.05	6.70	6.45	-	-
	INPUT POWER	W	250	250	250	4.450k	4.450k	4.450k	-	-
		TOTAL W		-		4.700k	4.700k	4.700k	840	6.000k
	ANNUAL CONSUMPTION	TOTAL kWh ※4		-		-	2350	-	-	-
	EER/EER CLASS	TOTAL(W/W)※5("A"~"G")	-	-	-	2.98	2.98 / C	2.98	3.93	2.58
	Erp ※6 Pdsign	kW	-	-	-	-	-	-		
	Erp ※6 SEER	(W/W)	-	-	-	-	-	-		
	Erp ※6 Annual consumption	kWh	-	-	-	-	-	-		
	Erp ※6 Class		-	-	-	-	-	-		
	POWER FACTOR	%	-	-	-	96	96	96	-	-
	NOISE INDOOR (H/M/L)	dB-A		46/44/39			-			
		Power Level dB		67/65/60			-			
	NOISE OUTDOOR (H/L)	dB-A					54/-			
		Power Level dB					71/-			
HEATING	CAPACITY	kW	14.0	14.0	14.0				4.1	16.0
		BTU/h	47800	47800	47800				14000	54600
	CURRENT	A	1.89	1.82	1.74	5.90	5.60	5.40	-	-
	INPUT POWER	W	250	250	250	3.730k	3.730k	3.730k	-	-
		TOTAL W		-		3.980k	3.980k	3.980k	900	5.200k
	COP/COP CLASS	TOTAL(W/W)※5("A"~"G")	-	-	-	3.52	3.52 / B	3.52	4.56	3.08
	Erp ※6 Pdsign	kW	-	-	-	-	-	-		
	Erp ※6 Tbivalen	°C	-	-	-	-	-	-		
	Erp ※6 SCOP	(W/W)	-	-	-	-	-	-		
	Erp ※6 Annual consumption	kWh	-	-	-	-	-	-		
	Erp ※6 Class		-	-	-	-	-	-		
	POWER FACTOR	%	-	-	-	96	96	96	-	-
	NOISE INDOOR (H/M/L)	dB-A		46/44/39			-		/	/
		Power Level dB		67/65/60			-			
	NOISE OUTDOOR (H/L)	dB-A		-			53/-		/	/
		Power Level dB		-			70/-			
EXTRA LOW TEMP	Total CAPACITY(kW)/INPUT POWER(W)/COP					-				
MAX CURRENT(A)/MAX INPUT POWER(W)			2.59/345	2.53/345	2.47/345	10.0/6.200k	10.0/6.500k	10.0/6.750k	/	
STARTING CURRENT(A)/COMP OUTPUT(W)			-	-	-	7.05/3.0k	6.70/3.0k	6.45/3.0k	/	
NETWORK IMPEDANCE (ΩMAX.)				-			-			
FM OUTPUT (W)				200			90×2		/	
MOISTURE REMOVAL VOLUME		L/h(Pt/h)	9.0		(18.9)		-			
External static pressure		Pa	50 (MIN10 ~ MAX80)							
I/D AIR FLOW	COOL	m^3/min (ft^3/min)	40/37/30 (1413/1307/1059)							
	HEAT	m^3/min (ft^3/min)	40/37/30 (1413/1307/1059)							
O/D AIR FLOW	COOL	m^3/min (ft^3/min)				135		(4767)		
	HEAT	m^3/min (ft^3/min)				120		(4238)		
REFRIGERANT TYPE, AMOUNT g(oz)						R410A	3.40k	(119.9)	/	
PROD DIM	HEIGHT : H mm(inch)		250 (9-27/32)			1416 (55-3/4)			/	
	WIDTH : W mm(inch)		1200 (+100) (47-1/4) (+3-15/16)			940 (37-1/32)			/	
	DEPTH : D mm(inch)		650 (25-19/32)			340 (13-13/32)			/	
PACK DIM	HEIGHT : H mm		338			1556			/	
	WIDTH : W mm		1402			1055			/	
	DEPTH : D mm		761			485			/	
MASS	(NET) kg(lb)		41 (91)			98 (216)			/	
	(GROSS) kg(lb)		48 (106)			108 (238)			/	
LAYERS LIMIT (actually)			6 (7)			1 (2)				
Operation Condition		Cool O.D(DBT)	18°C ~ 32°C			-10°C ~ 43°C				
		Heat O.D(DBT)	16°C ~ 30°C			-15°C ~ 24°C				
PIPING	PIPE DIAMETER mm (inch)		(Liquid)ø9.52(3/8) (Gas)ø15.88(5/8)			(Liquid)ø9.52(3/8) (Gas)ø15.88(5/8)				
	CONNECT METHOD, STD LENGTH m (ft)		flared type, 5.0(16.4)			flared type, 5.0(16.4)				
	PIPE LENGTH RANGE m (ft)		5 ~ 50 (16.4 ~ 164.0)						~	~
	I/D&O/D HEIGHT DIFFERENCE m (ft)		15 (OD located lower) / 30 (OD located higher) (49.2/98.4)							
	ADD GAS AMOUNT g/m (oz/ft)		50 (0.538)							
	PIPE LENGTH FOR ADDITIONAL GAS m (ft)		30 (98.4)							

*1: In case it is necessary to indicate the air □ow volume in (l/s), the value in (m^3/min.) shall be multiplied by 16.7 and rounded down the decimal point.
*2: If the EUROVENT Certi□ed models can be operated under the □extra-low□temperature condition, -7□C dry bulb and -8□C wet-bulb temperatures with rated voltage 230 V shall be used.
*3: Network Impedance shall be applicable for EUROPE and CHINA models.
*4: The annual consumption is calculated by multiplying the input power at 230 V (400 V) by an average of 500 hours per year in cooling mode.
*5: EER and COP classification is at 230 V (400 V) only in accordance with EU directive 2002/31/EC.
*6: SEER and SCOP classification is at 230V(400V) only in accordance with EN-14825. For heating, SCOP indicates the value of only Average heating season, Other fiche data indicates in an attached sheet.

1-2. Dimensional Data

(A) Indoor Units: S-36PU1E5A / S-45PU1E5A / S-50PU1E5A / S-60PU1E5A / S-71PU1E5A

unit: mm

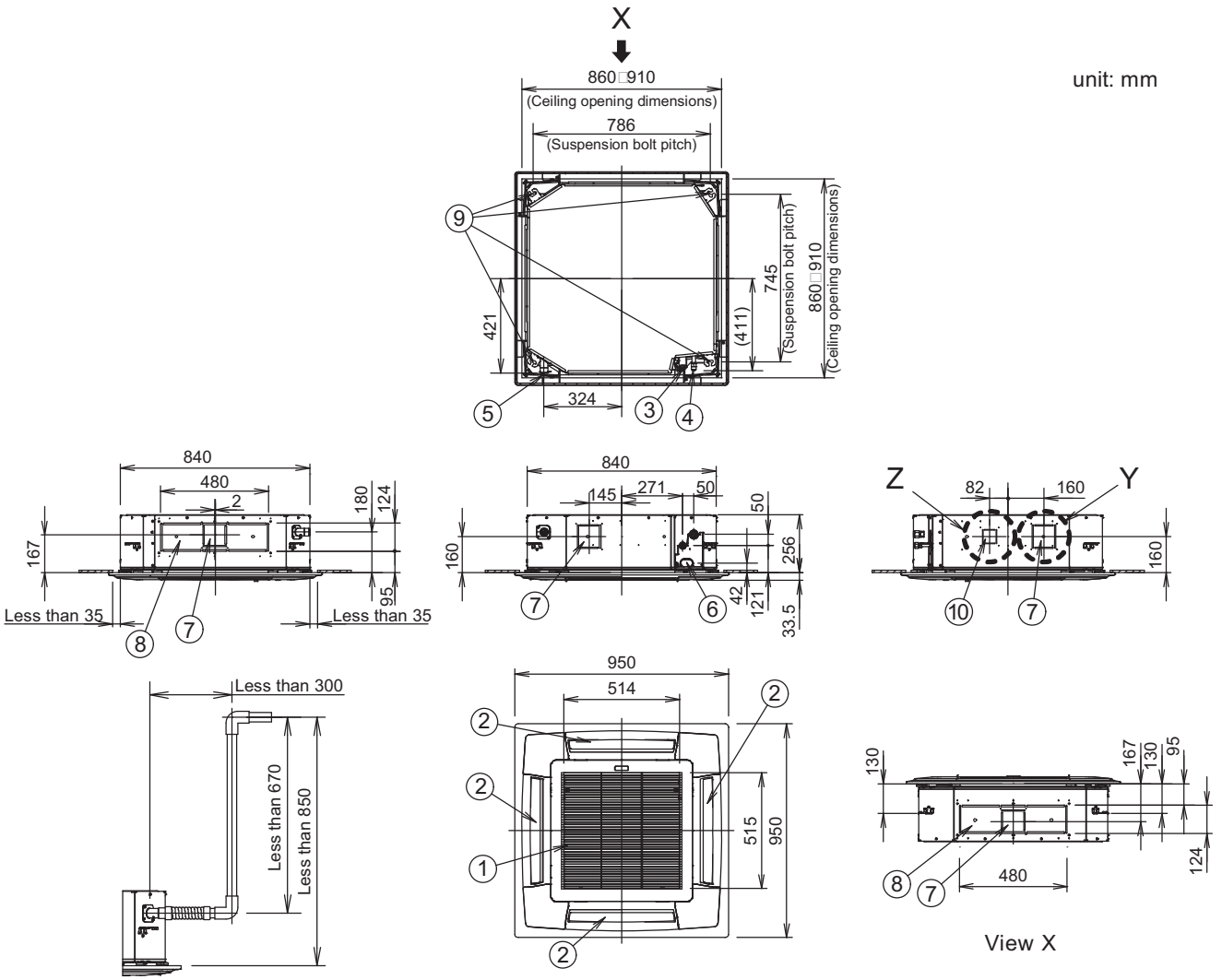

Raise dimension of drain tube

The length of the suspension bolts should be selected so that there is a gap of 30 mm or more below the lower surface of the ceiling (18 mm or more below the lower surface of the main unit), as shown in the figure at right. If the suspension bolt is too long, it will contact the ceiling panel and the unit cannot be installed.

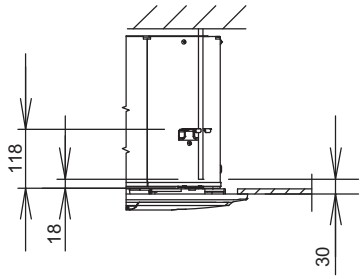

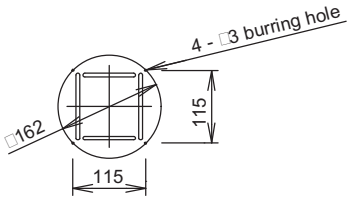

Detailed view Y

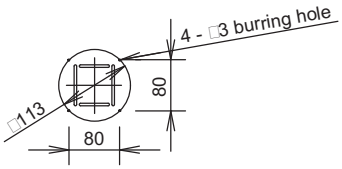

Detailed view Z

①	Air intake
②	Discharge outlet
③	Refrigerant tubing (liquid tube) 36-50 type □6.35 (flared), 60 □71 type □9.52 (flared)
④	Refrigerant tubing (gas tube) 36-50 type □12.7 (flared), 60 □71 type □15.88 (flared)
⑤	Drain tube connection port VP25 (outer dia. □32)
⑥	Power supply port
⑦	Discharge duct connection port (□150)
⑧	Vaporization-type humidifier (optional) installation area
⑨	Suspension bolt hole (4-12×30 elongated hole)
⑩	Fresh air intake duct connection port (□100) *

* Necessary to provide optional air intake kit.

□Filter dimension□

520 x 520 x 16

1-2. Dimensional Data

(A) Indoor Units: S-100PU1E5A / S-125PU1E5A / S-140PU1E5A

unit: mm

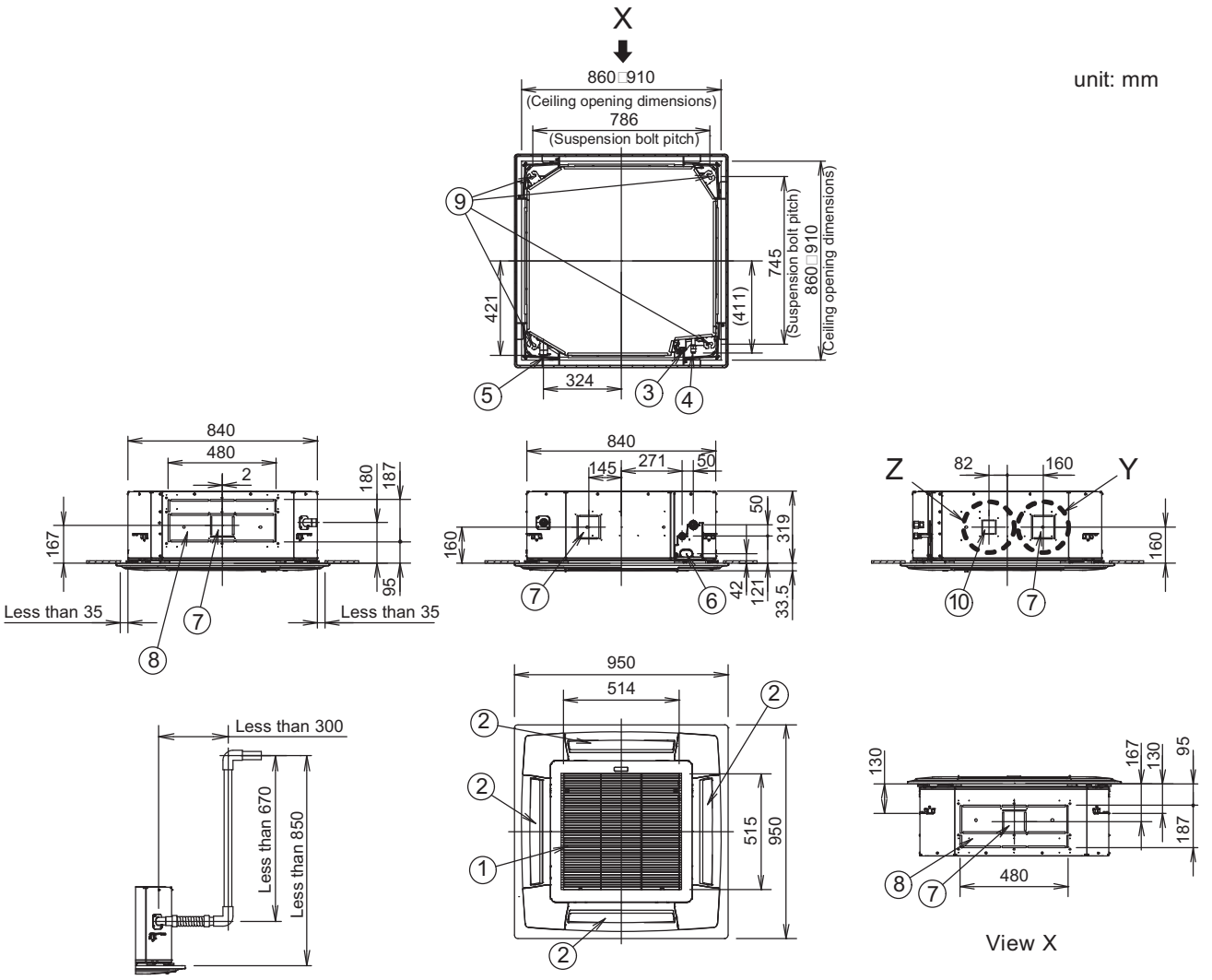

The length of the suspension bolts should be selected so that there is a gap of 30 mm or more below the lower surface of the ceiling (18 mm or more below the lower surface of the main unit), as shown in the figure at right. If the suspension bolt is too long, it will contact the ceiling panel and the unit cannot be installed.

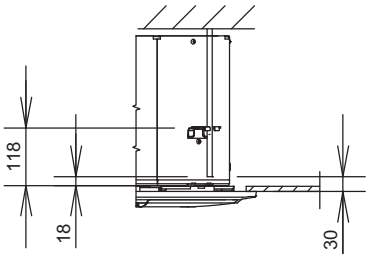

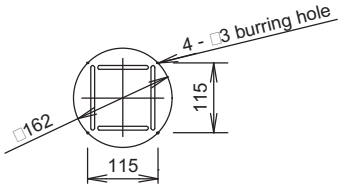

Detailed view Y

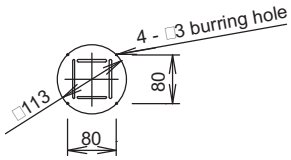

Detailed view Z

①	Air intake
②	Discharge outlet
③	Refrigerant tubing (liquid tube) □9.52 (flared)
④	Refrigerant tubing (gas tube) □15.88 (flared)
⑤	Drain tube connection port VP25 (outer dia. □32)
⑥	Power supply port
⑦	Discharge duct connection port (□150)
⑧	Vaporization-type humidifier (optional) installation area
⑨	Suspension bolt hole (4-12×30 elongated hole)
⑩	Fresh air intake duct connection port (□100) *

* Necessary to provide optional air intake kit.

□Filter dimension□

520 x 520 x 16

1-2. Dimensional Data

(A) Indoor Units: S-36PT2E5A, S-45PT2E5A, S-50PT2E5A

unit :mm

Detailed view of intaking outside air duct connection port

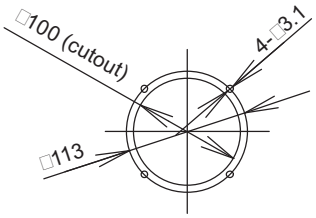

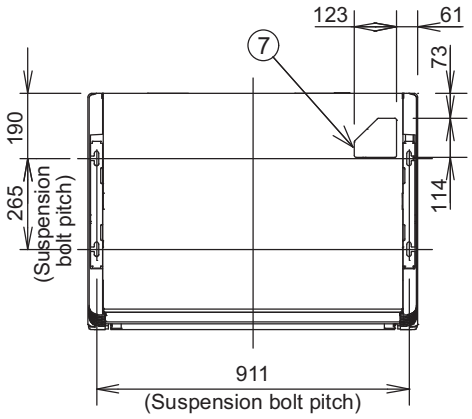

Distance of each exposed bolt must be of equal length within 50mm.

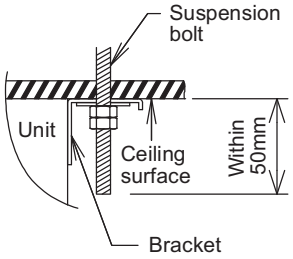

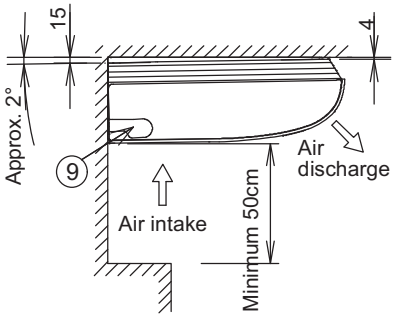

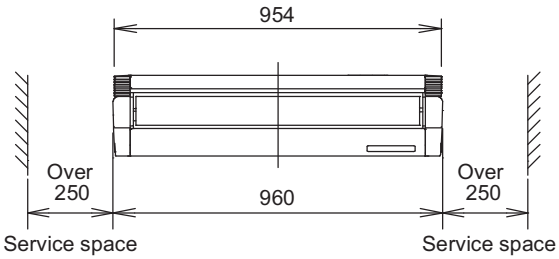

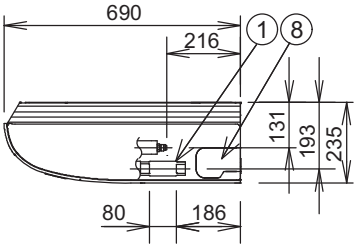

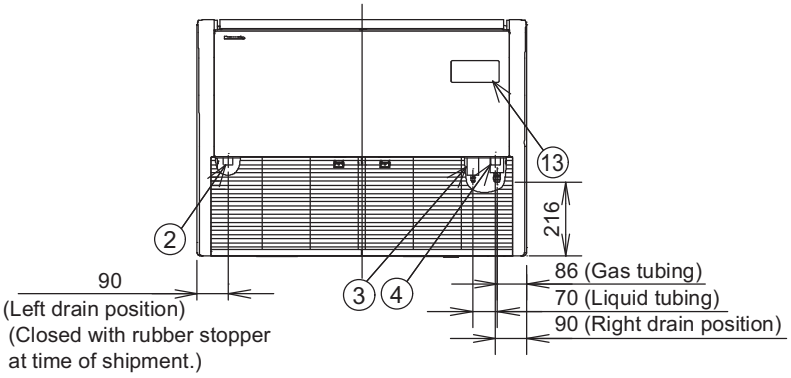

①	Drain port VP20 (inside diameter □26mm, drain hose supplied)
②	Left drain position
③	Refrigerant liquid tubing (□6.35mm, flare connection)
④	Refrigerant gas tubing (□12.7mm, flare connection)
⑤	Cover of rear tubing hole
⑥	Tubing hole on wall surface (□100mm)
⑦	Upper side tubing port
⑧	Right side drain hose outlet port (cutout)
⑨	Left side drain hose outlet port (cutout)
⑩	Left-rear side drain hose outlet port (cutout)
⑪	Power inlet port
⑫	Remote control wiring and inter-unit wiring inlet port
⑬	Wireless remote controller receiver installation location
⑭	Outside air intake duct connection port (□100mm, cutout)

Hole position of indoor unit rear-side
(Figure shows view from front)

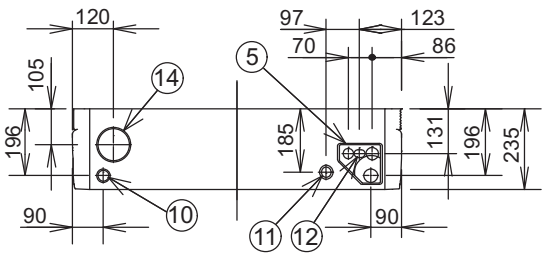

Tubing hole position on wall surface
(Figure shows view from front)

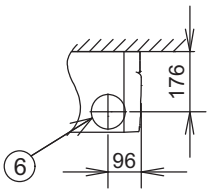

□Filter size□

(421 x 250 x 16) x 2 pcs.

1-2. Dimensional Data

(A) Indoor Units: S-60PT2E5A, S-71PT2E5A

unit :mm

Detailed view of intaking outside air duct connection port

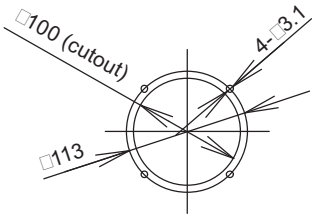

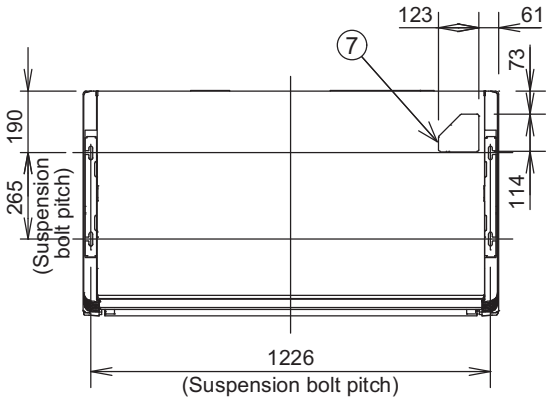

Distance of each exposed bolt must be of equal length within 50mm.

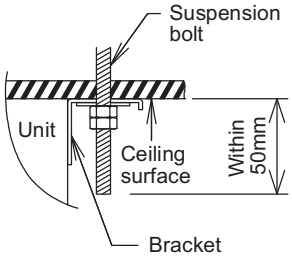

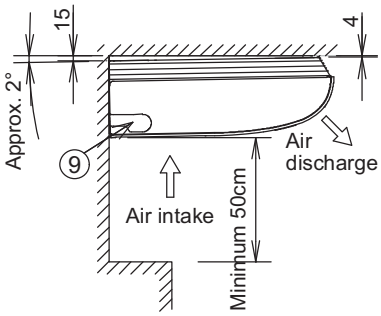

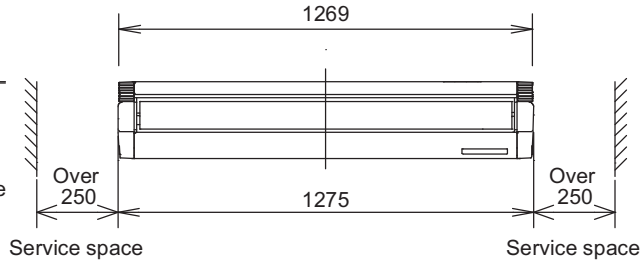

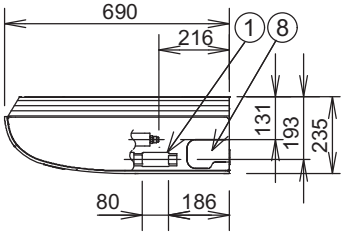

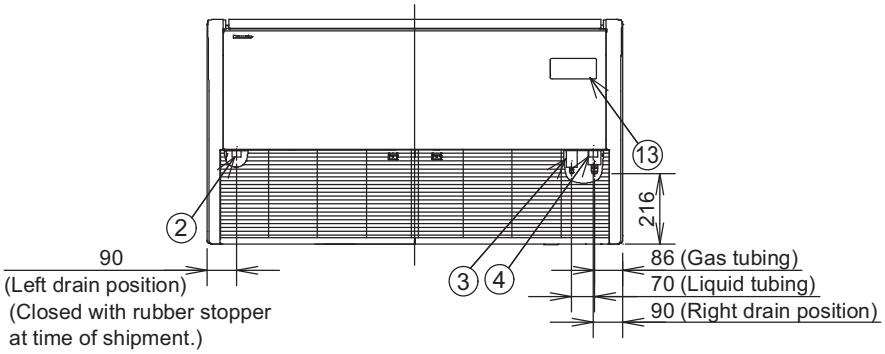

①	Drain port VP20 (inside diameter □26mm, drain hose supplied)
②	Left drain position
③	Refrigerant liquid tubing (□9.52mm, flare connection)
④	Refrigerant gas tubing (□15.88mm, flare connection)
⑤	Cover of rear tubing hole
⑥	Tubing hole on wall surface (□100mm)
⑦	Upper side tubing port
⑧	Right side drain hose outlet port (cutout)
⑨	Left side drain hose outlet port (cutout)
⑩	Left-rear side drain hose outlet port (cutout)
⑪	Power inlet port
⑫	Remote control wiring and inter-unit wiring inlet port
⑬	Wireless remote controller receiver installation location
⑭	Outside air intake duct connection port (□100mm, cutout)

Hole position of indoor unit rear-side
(Figure shows view from front)

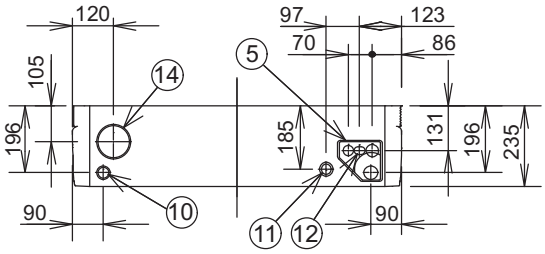

Tubing hole position on wall surface
(Figure shows view from front)

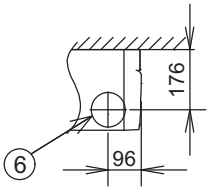

□Filter size□

(579 x 250 x 16) x 2 pcs.

1-2. Dimensional Data

(A) Indoor Units: S-100PT2E5A, S-125PT2E5A, S-140PT2E5A

unit :mm

Detailed view of intaking outside air duct connection port

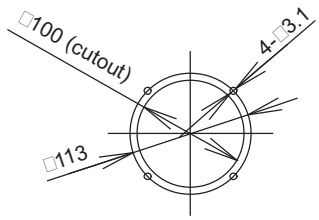

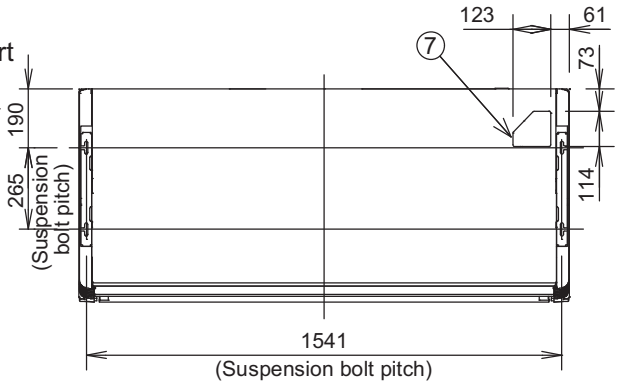

Distance of each exposed bolt must be of equal length within 50mm.

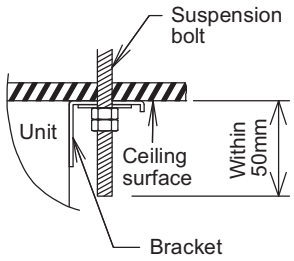

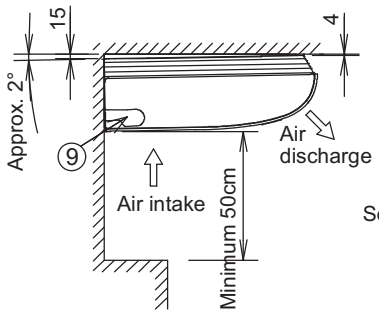

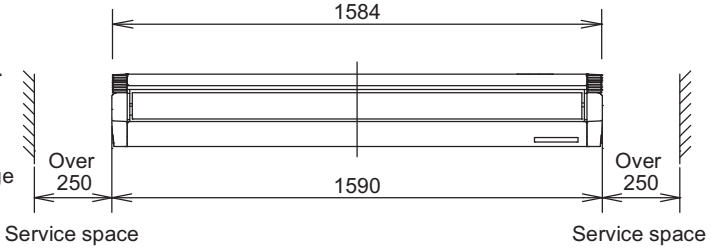

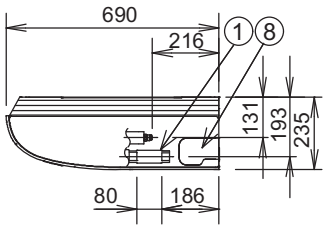

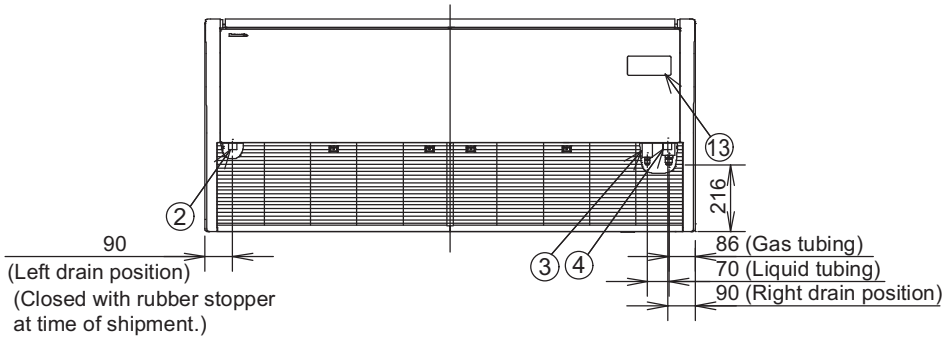

①	Drain port VP20 (inside diameter □26mm, drain hose supplied)
②	Left drain position
③	Refrigerant liquid tubing (□9.52mm, flare connection)
④	Refrigerant gas tubing (□15.88mm, flare connection)
⑤	Cover of rear tubing hole
⑥	Tubing hole on wall surface (□100mm)
⑦	Upper side tubing port
⑧	Right side drain hose outlet port (cutout)
⑨	Left side drain hose outlet port (cutout)
⑩	Left-rear side drain hose outlet port (cutout)
⑪	Power inlet port
⑫	Remote control wiring and inter-unit wiring inlet port
⑬	Wireless remote controller receiver installation location
⑭	Outside air intake duct connection port (□100mm, cutout)

Hole position of indoor unit rear-side
(Figure shows view from front)

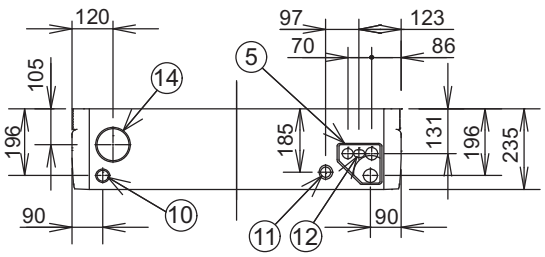

Tubing hole position on wall surface
(Figure shows view from front)

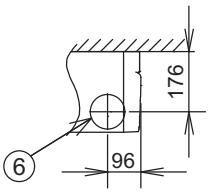

□Filter size□

(736 x 250 x 16) x 2 pcs.

1-2. Dimensional Data

(A) Indoor Units: S-36PK1E5A, S-45PK1E5A, S-50PK1E5A, S-60PK1E5A, S-71PK1E5A, S-100PK1E5A

unit: mm

1	Refrigerant tubing (liquid tube) S36 - S50: □6.35 (flared) S60 - S100: □9.52 (flared)
2	Refrigerant tubing (gas tube) S36 - S50: □12.7 (flared) S60 - S100: □15.88 (flared)
3	Drain hose VP13 (outer dia. □18)
4	Rear panel (PL BACK)
5	Rear panel fixing holes (□5 holes or 5X13 elongated holes)
6	Piping & coiring holes (□80)

《FILTER SIZE 》

(418.5 X 342 X 2) X 2 pcs.

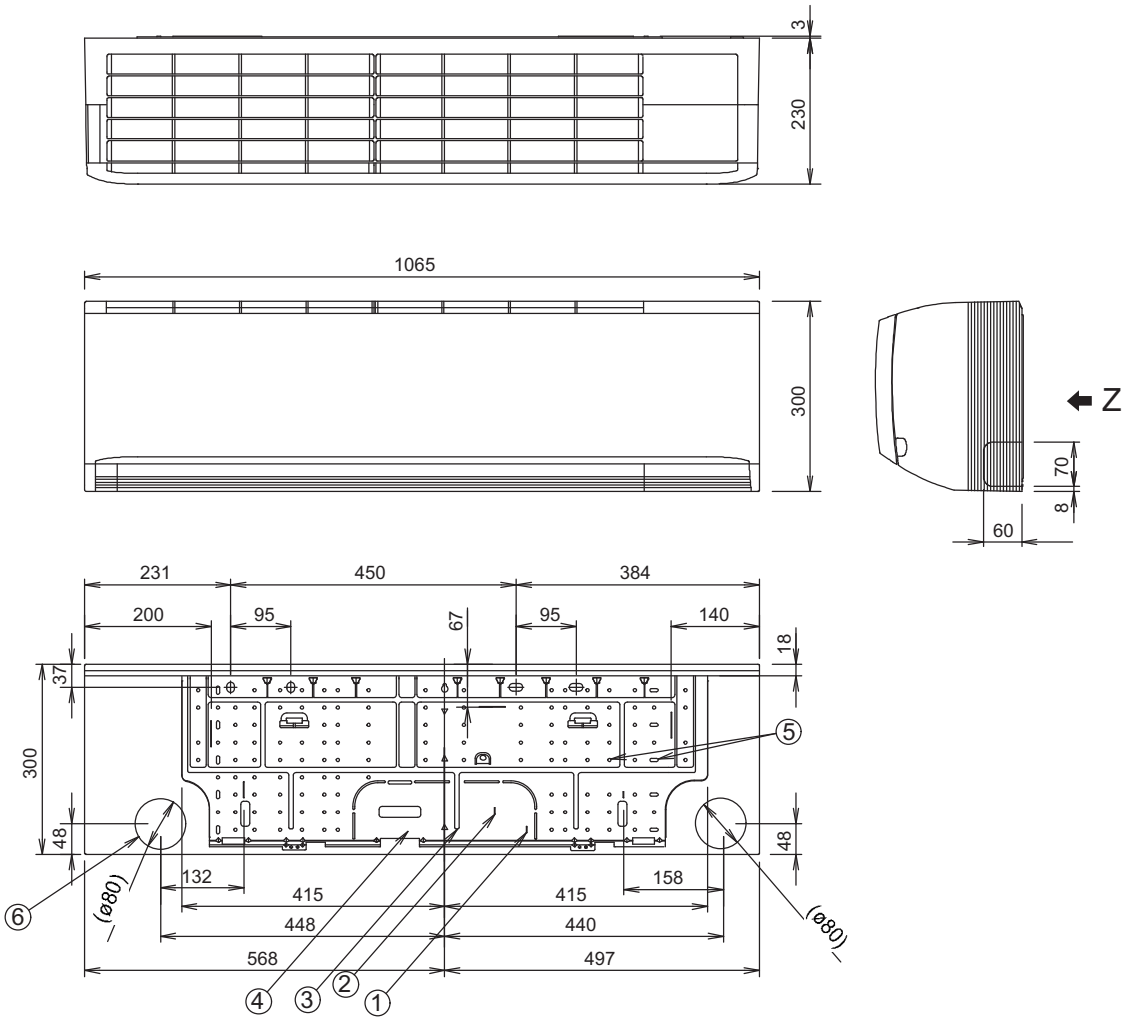

Z view

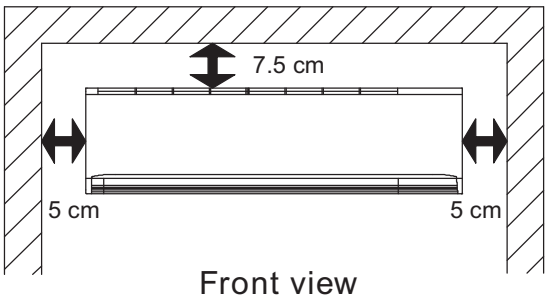

Front view

Nessesary minimum space for a installation

1-2. Dimensional Data

(A) Indoor Units: S-36PF1E5A, S-45PF1E5A, S-50PF1E5A, S-60PF1E5A, S-71PF1E5A, S-100PF1E5A, S-125PF1E5A, S-140PF1E5A

Unit: mm

Type	A	B	C	D	E	F
36, 45, 50	867	800	450 (Pitch 150 × 3)	71	592	12
60, 71	1,067	1,000	750 (Pitch 150 × 5)	21	792	16
100, 125, 140	1,467	1,400	1,050 (Pitch 150 × 7)	71	1,192	20

a) Refrigerant tubing joint (liquid tube)
b) Refrigerant tubing joint (gas tube)
c) Upper drain port VP25 (O.D. 32 mm) ℓ200 flexible hose supplied
d) Bottom drain port VP25 (O.D. 32 mm)
e) Suspension lug (4 □12 × 30 mm)
f) Power supply outlet
g) Fresh air intake port (□150 mm)
h) Flange for flexible air outlet duct
i) Electrical component box
j) Filter

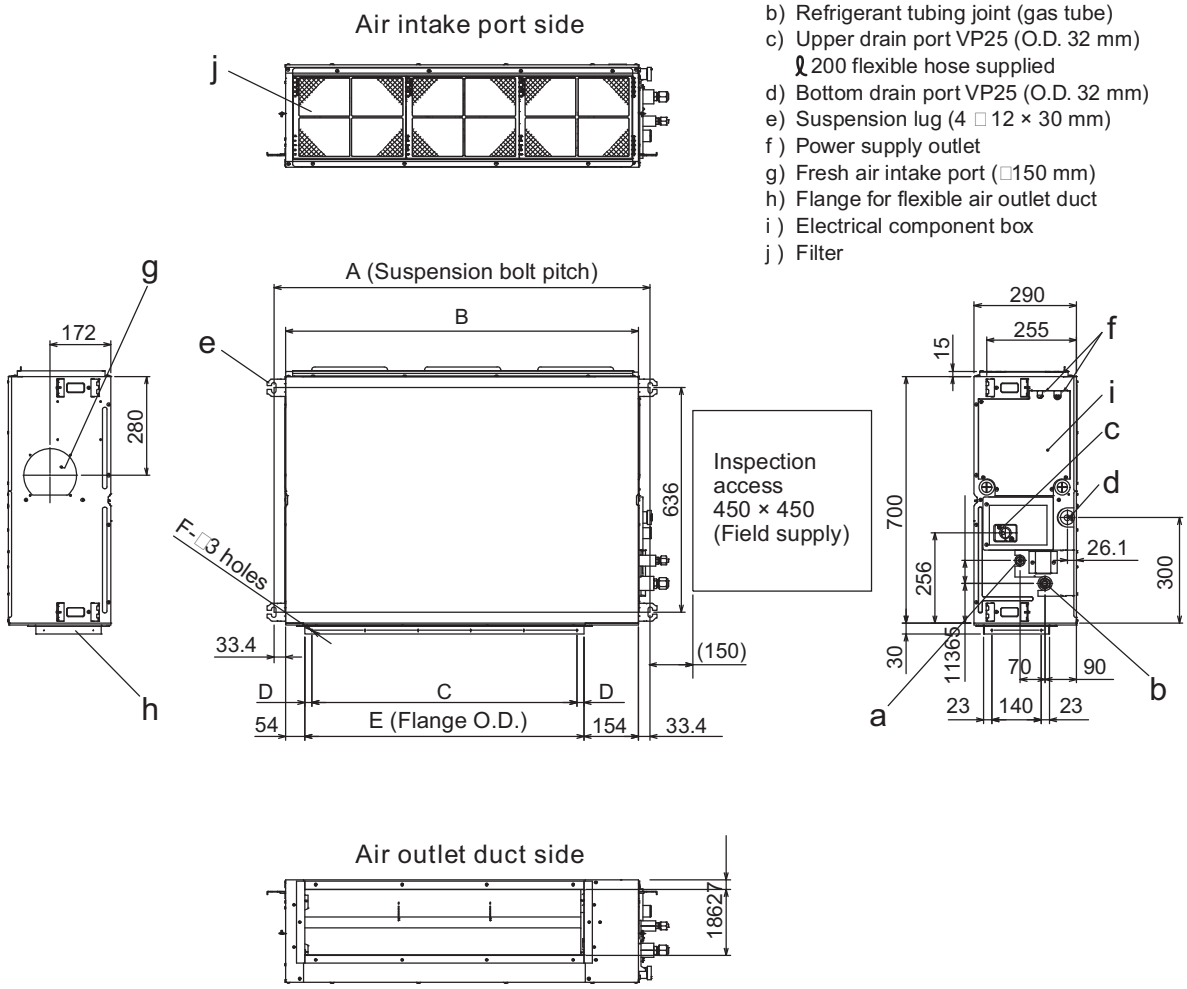

1-2. Dimensional Data

(A) Indoor Units: S-36PN1E5A, S-45PN1E5A, S-50PN1E5A

POSITION OF SUSPENSION BOLT

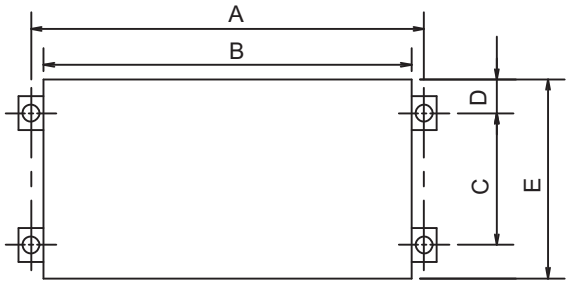

(unit:mm)

TYPE	A	B	C	D	E
S-36PN1E5A	840	780	523	64	650
S-45PN1E5A					
S-50PN1E5A					
S-60PN1E5A	1060	1000	523	64	650
S-71PN1E5A					
S-100PN1E5A	1260	1200	523	64	650
S-125PN1E5A					
S-140PN1E5A					

No.	NAME	QTY	NOTE
1	Pipe connection (gas)	1	O.D. □12.7 Flared
2	Pipe connection (liquid)	1	O.D. □6.35 Flared
3	Drain pipe connection	2	Female screw PT1"
4	Duct connection	2	
5	Hanger	4	
6	Control box	1	

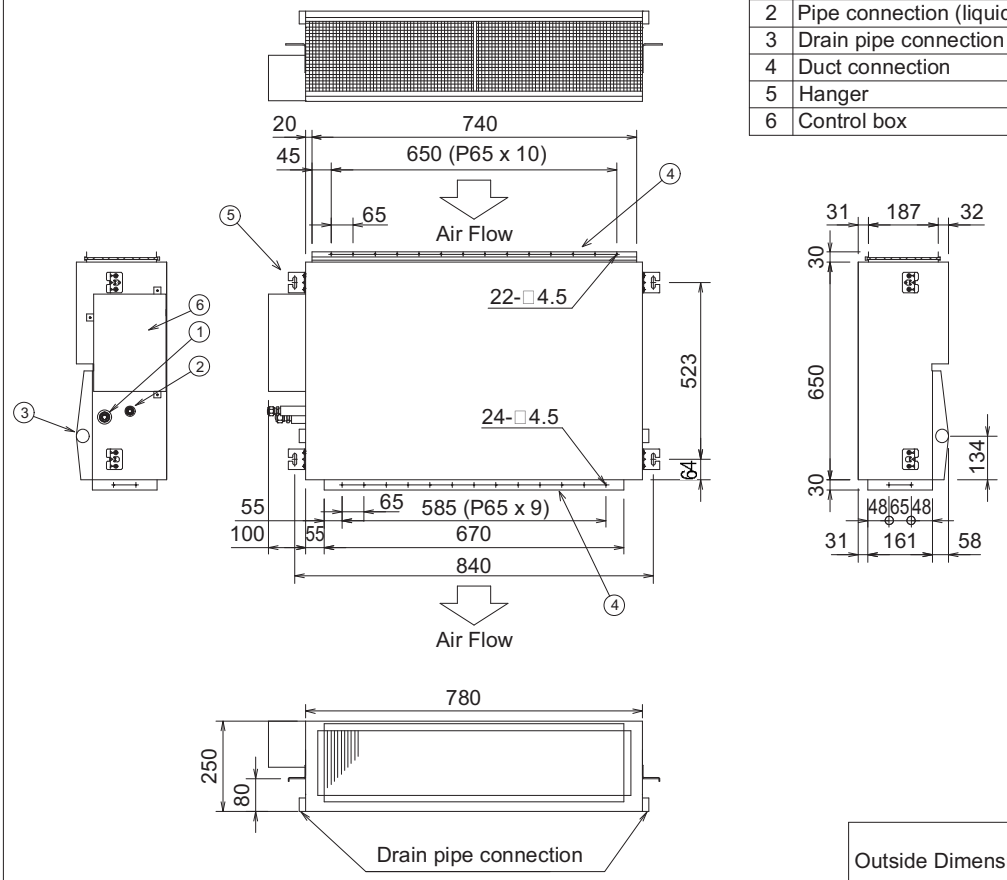

UNIT:mm

Outside Dimensions	MODEL NO.	S-36PN1E5A S-45PN1E5A S-50PN1E5A

1-2. Dimensional Data

(A) Indoor Units: S-60PN1E5A, S-71PN1E5A

NO.	NAME	QTY	NOTE
1	Pipe connection (gas)	1	O.D. □15.88 Flared
2	Pipe connection (liquid)	1	O.D. □9.52 Flared
3	Drain pipe connection	2	Female screw PT1"
4	Duct connection	2	
5	Hanger	4	
6	Control box	1	

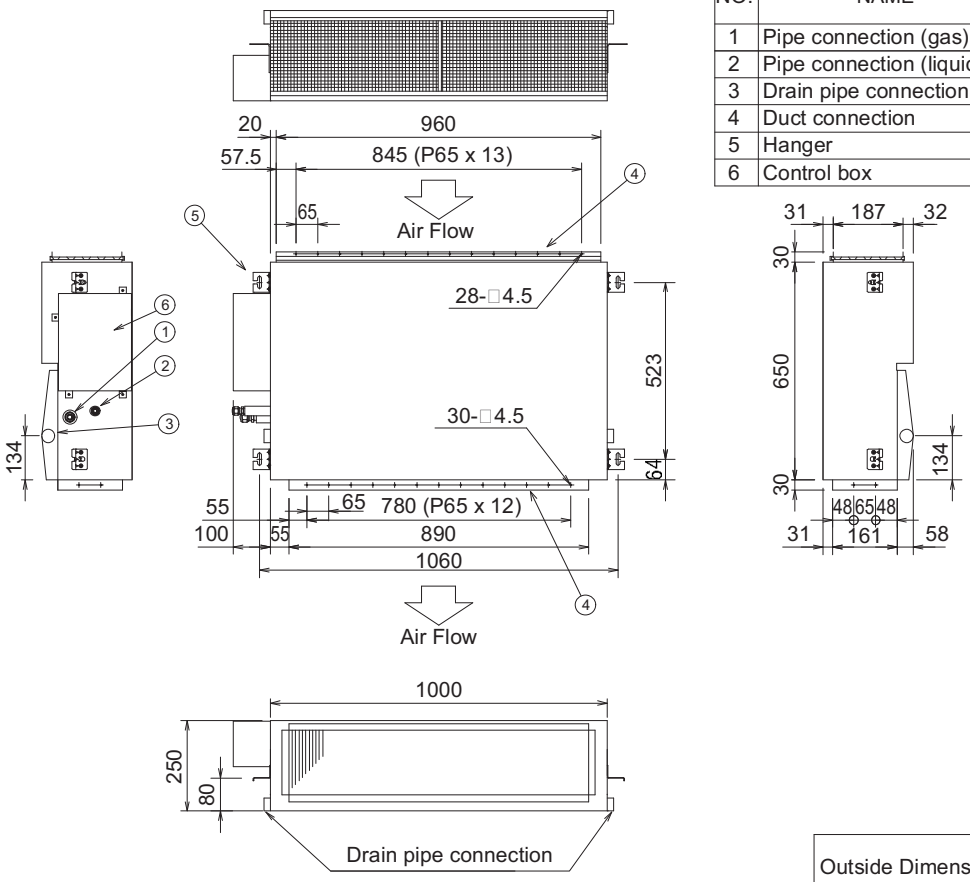

UNIT:mm

Outside Dimensions	MODEL NO.	S-60PN1E5A S-71PN1E5A

(A) Indoor Units: S-100PN1E5A, S-125PN1E5A, S-140PN1E5A

NO.	NAME	QTY	NOTE
1	Pipe connection (gas)	1	O.D. □15.88 Flared
2	Pipe connection (liquid)	1	O.D. □9.52 Flared
3	Drain pipe connection	2	Female screw PT1"
4	Duct connection	2	
5	Hanger	4	
6	Control box	1	

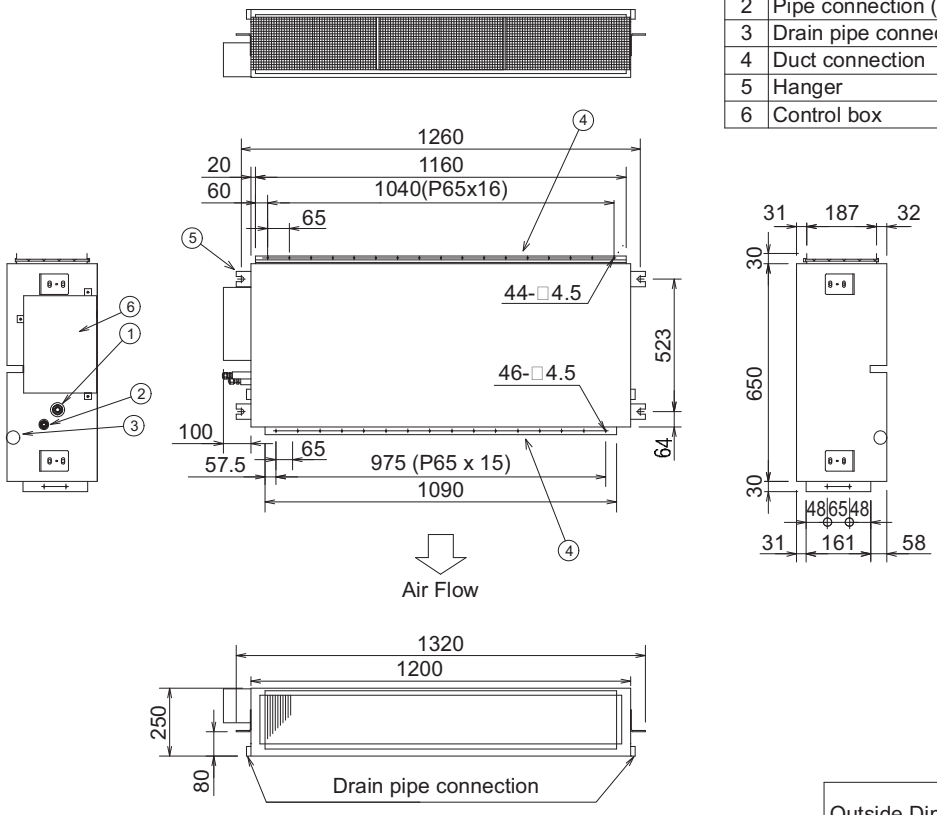

UNIT:mm

Outside Dimensions	MODEL NO.	S-100PN1E5A S-125PN1E5A S-140PN1E5A

1-2. Dimensional Data

(B) Outdoor Unit: U-50PE1E5
U-60PEY1E5 / U-71PEY1E5

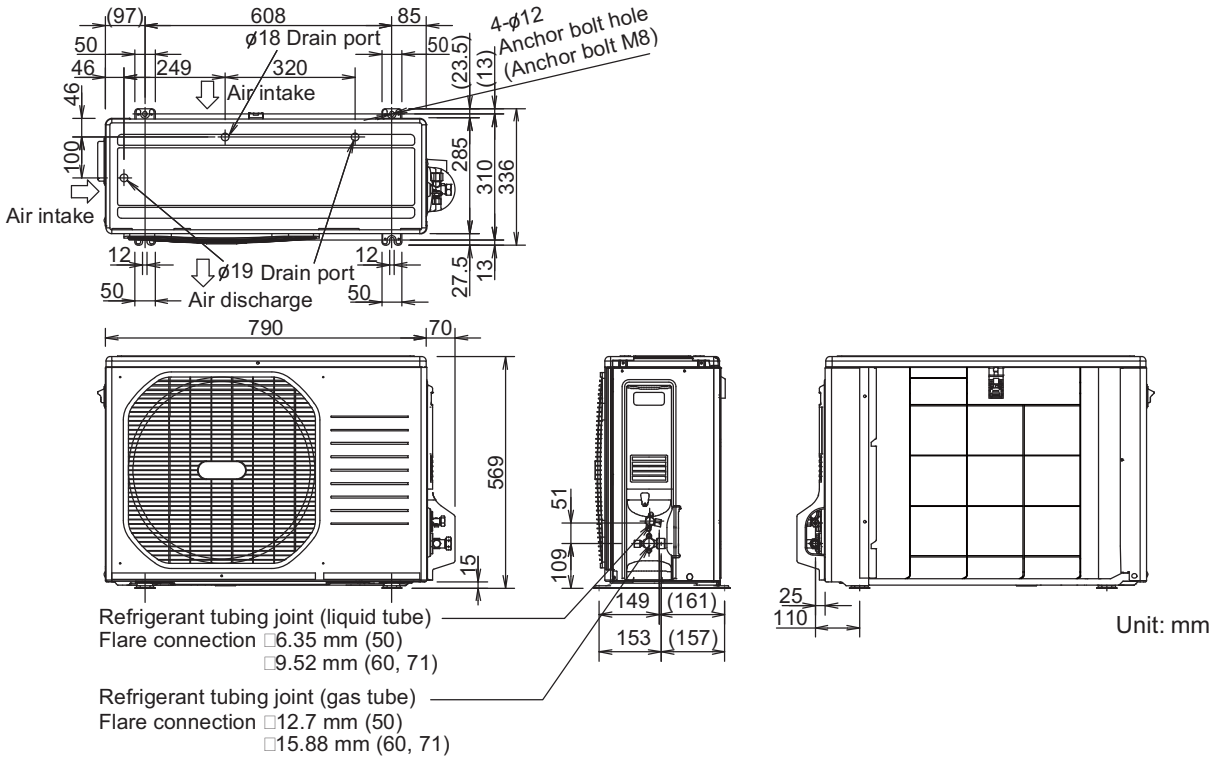

1-2. Dimensional Data

(B) Outdoor Units: U-60PE1E5A / U-71PE1E5A/ U-100PEY1E5/ U-125PEY1E5
U-71PE1E8A / U-100PEY1E8/ U-125PEY1E8

Unit:mm

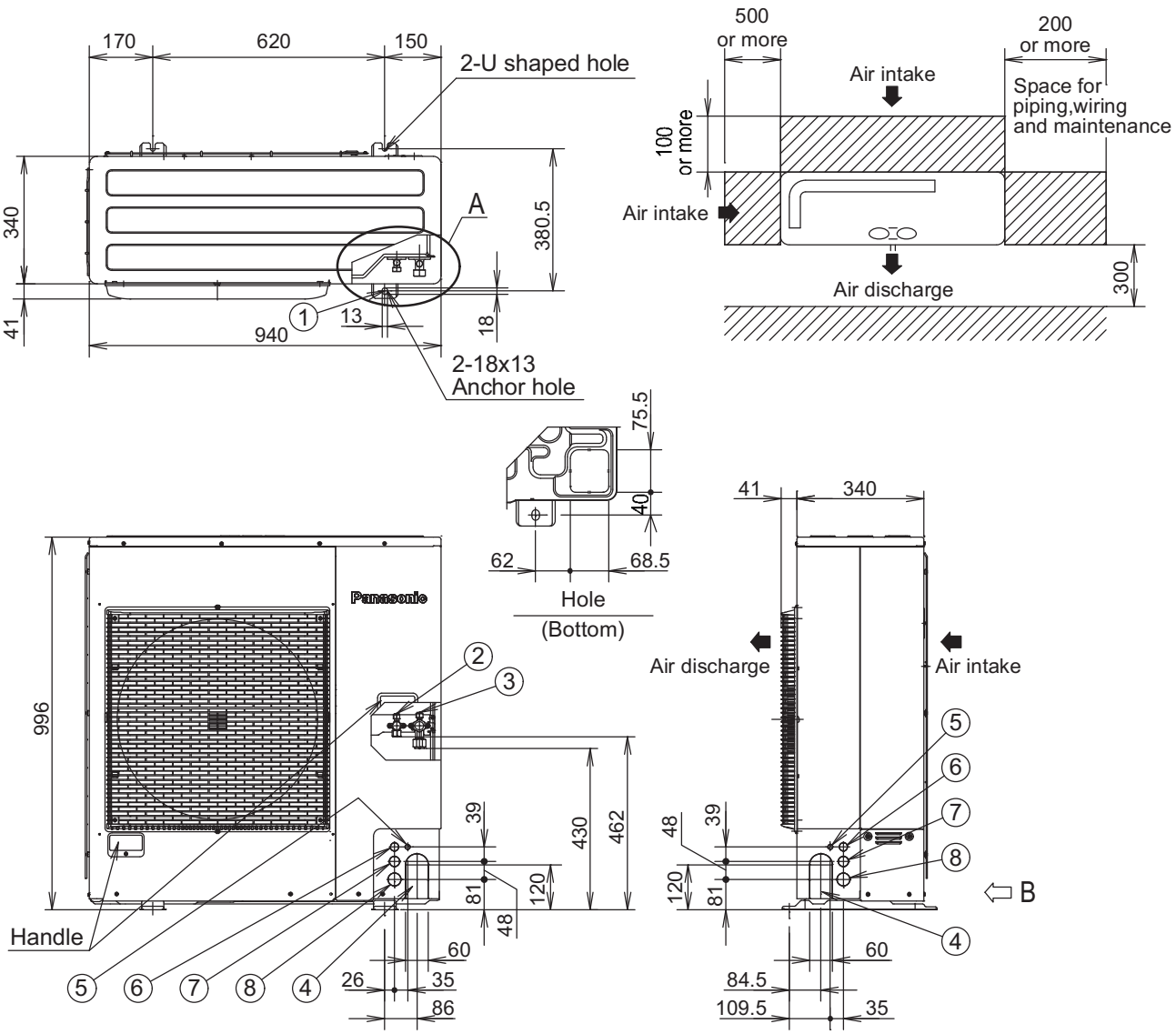

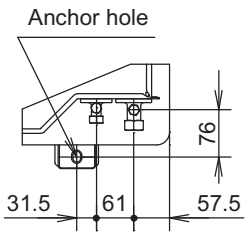

Enlarged view A

Refrigerant piping
end connection

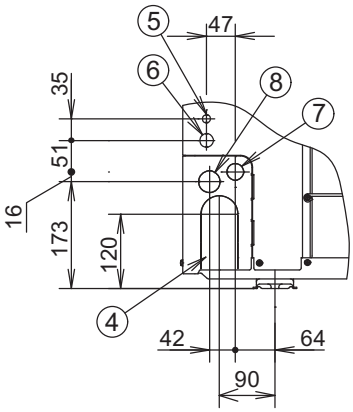

View B

unit: mm

①	Mounting hole, anchor bolt:M10
②	Refrigerant piping (liquid pipe), flared connection (□9.52)
③	Refrigerant piping (gas pipe), flared connection (□15.88)
④	Refrigerant piping hole
⑤	Electrical wiring port (□13)
⑥	Electrical wiring port (□22)
⑦	Electrical wiring port (□27)
⑧	Electrical wiring port (□35)

1-2. Dimensional Data

(B) Outdoor Units: U-100PE1E5A / U-125PE1E5A / U-140PE1E5A
U-100PE1E8A / U-125PE1E8A / U-140PE1E8A / U-140PEY1E8

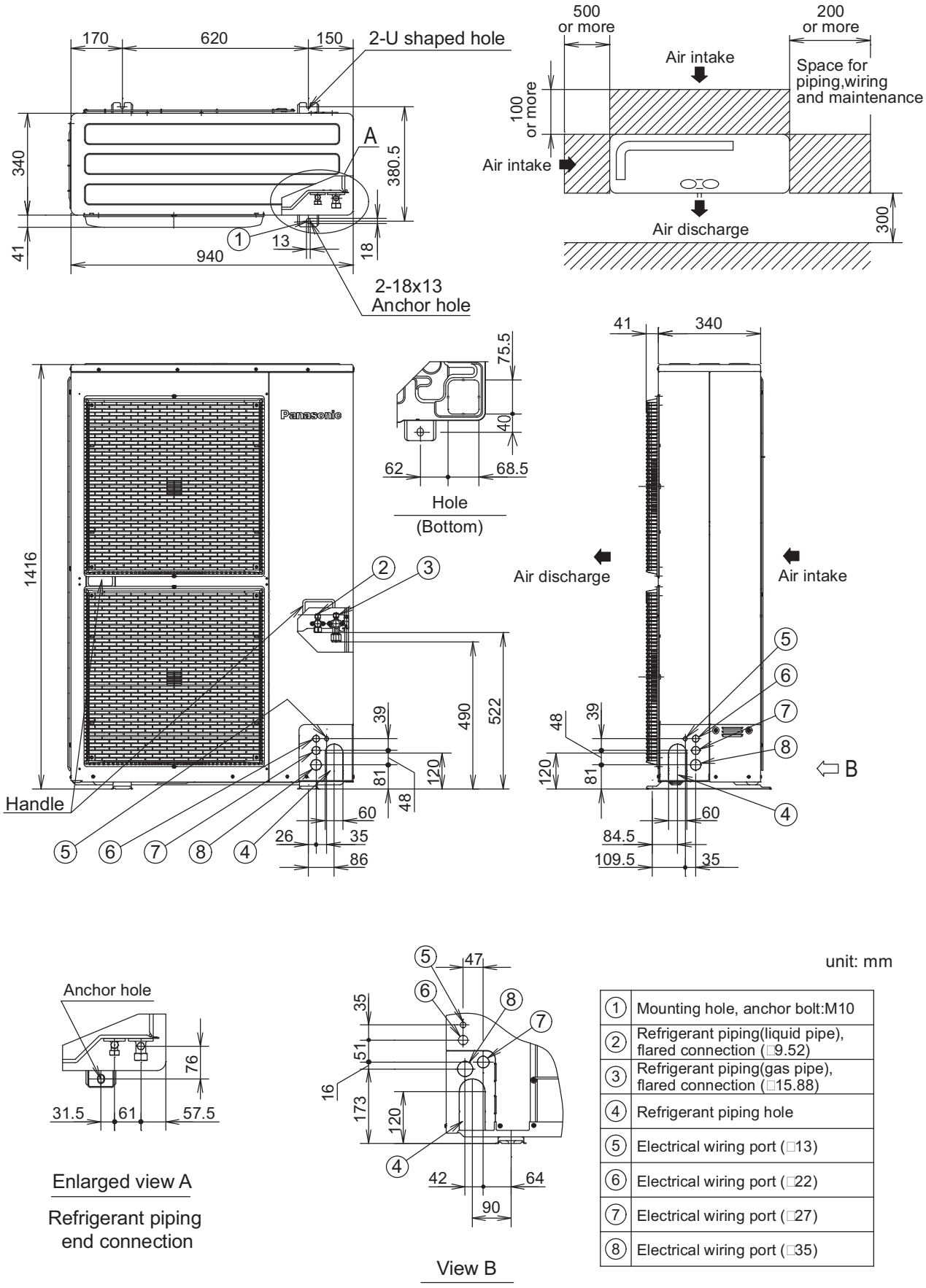

①	Mounting hole, anchor bolt:M10
②	Refrigerant piping(liquid pipe), flared connection (□9.52)
③	Refrigerant piping(gas pipe), flared connection (□15.88)
④	Refrigerant piping hole
⑤	Electrical wiring port (□13)
⑥	Electrical wiring port (□22)
⑦	Electrical wiring port (□27)
⑧	Electrical wiring port (□35)

1-3. Refrigerant Flow Diagram

Outdoor Unit: U-50PE1E5

Indoor Unit:

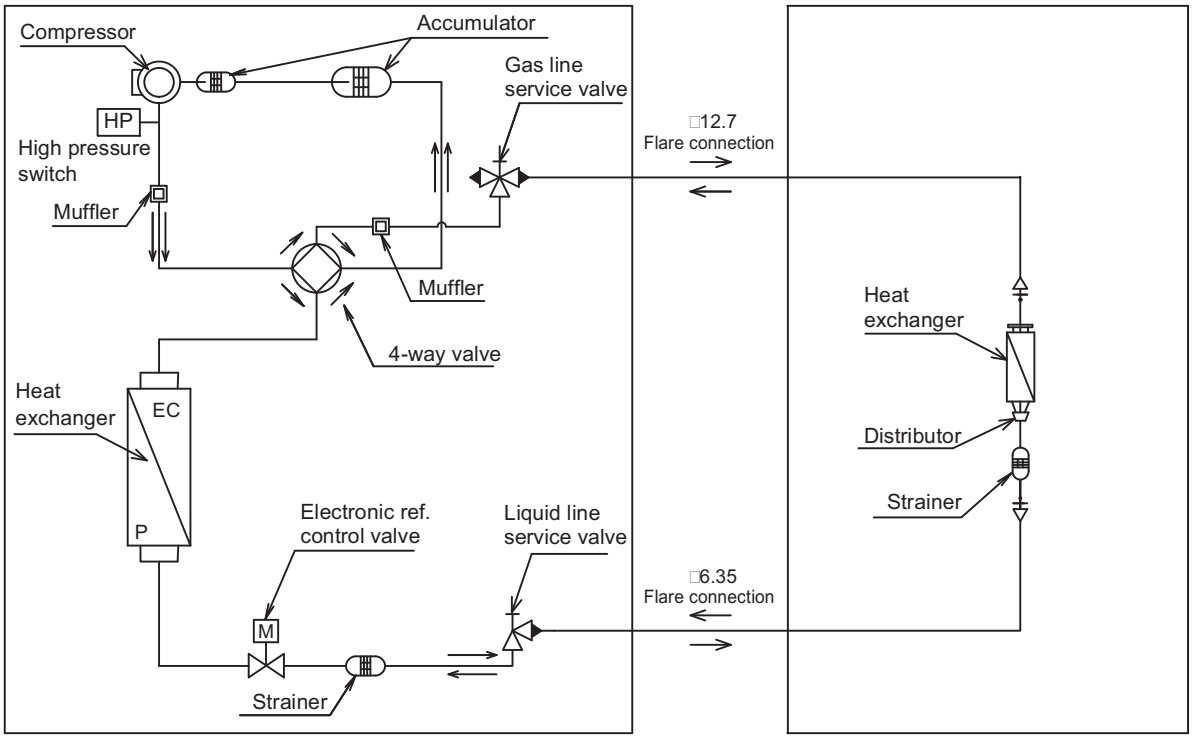

Cooling cycle
Heating cycle

Outdoor Unit : U-60PEY1E5
U-71PEY1E5

Indoor Unit:

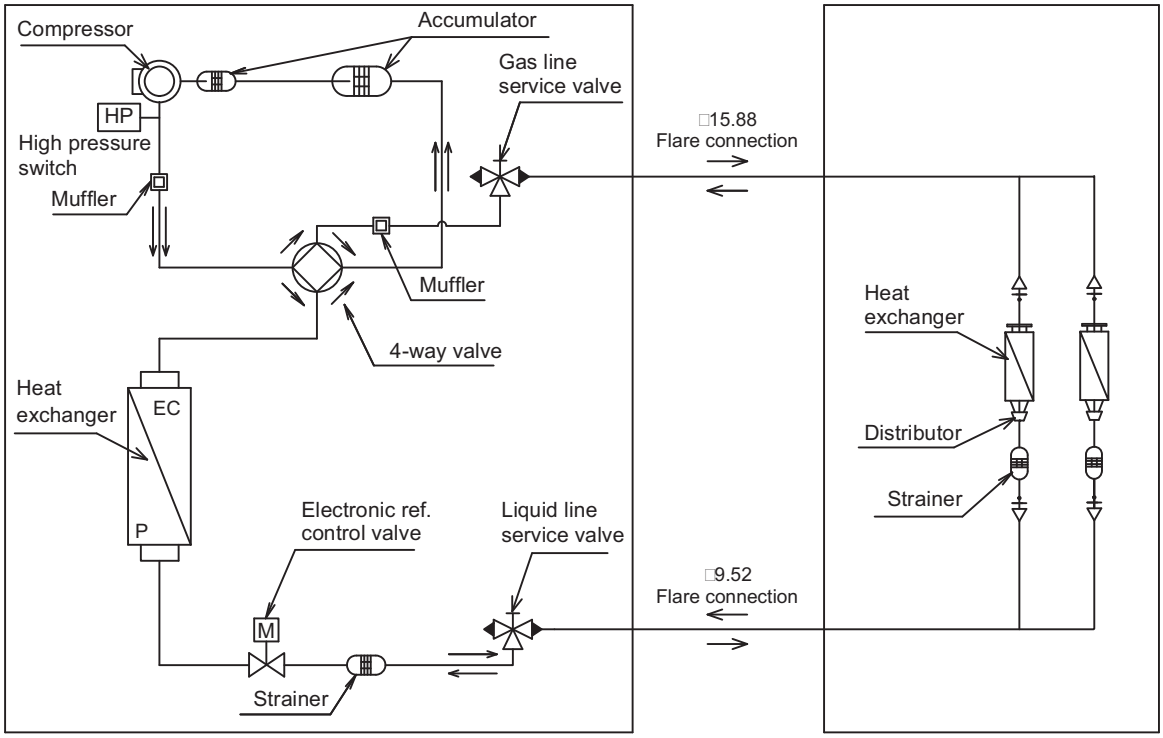

Cooling cycle
Heating cycle

1-3. Refrigerant Flow Diagram

Outdoor Units: U-60PE1E5A / U-71PE1E5A
U-71PE1E8A

Indoor Unit

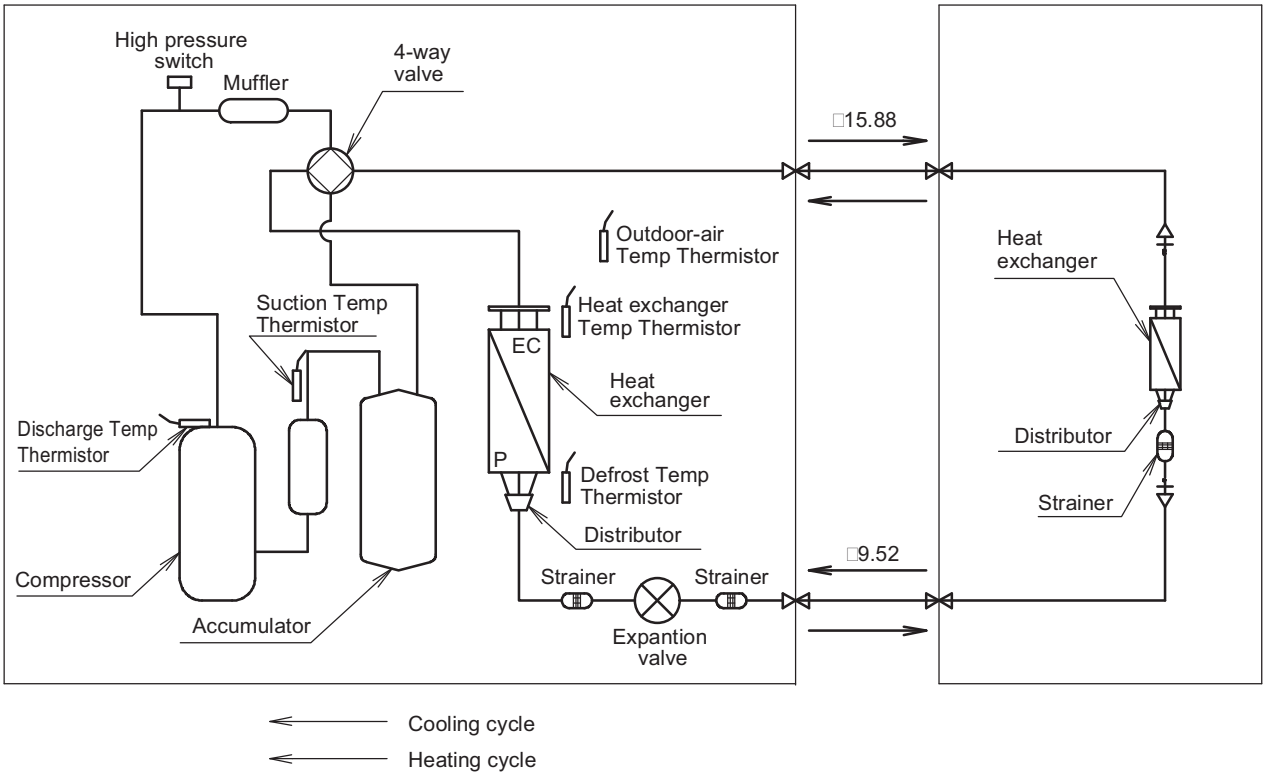

Outdoor Units: U-100PE1E5A / U-125PE1E5A / U-140PE1E5A
U-100PE1E8A / U-125PE1E8A / U-140PE1E8A / U-140PEY1E8

Indoor Unit

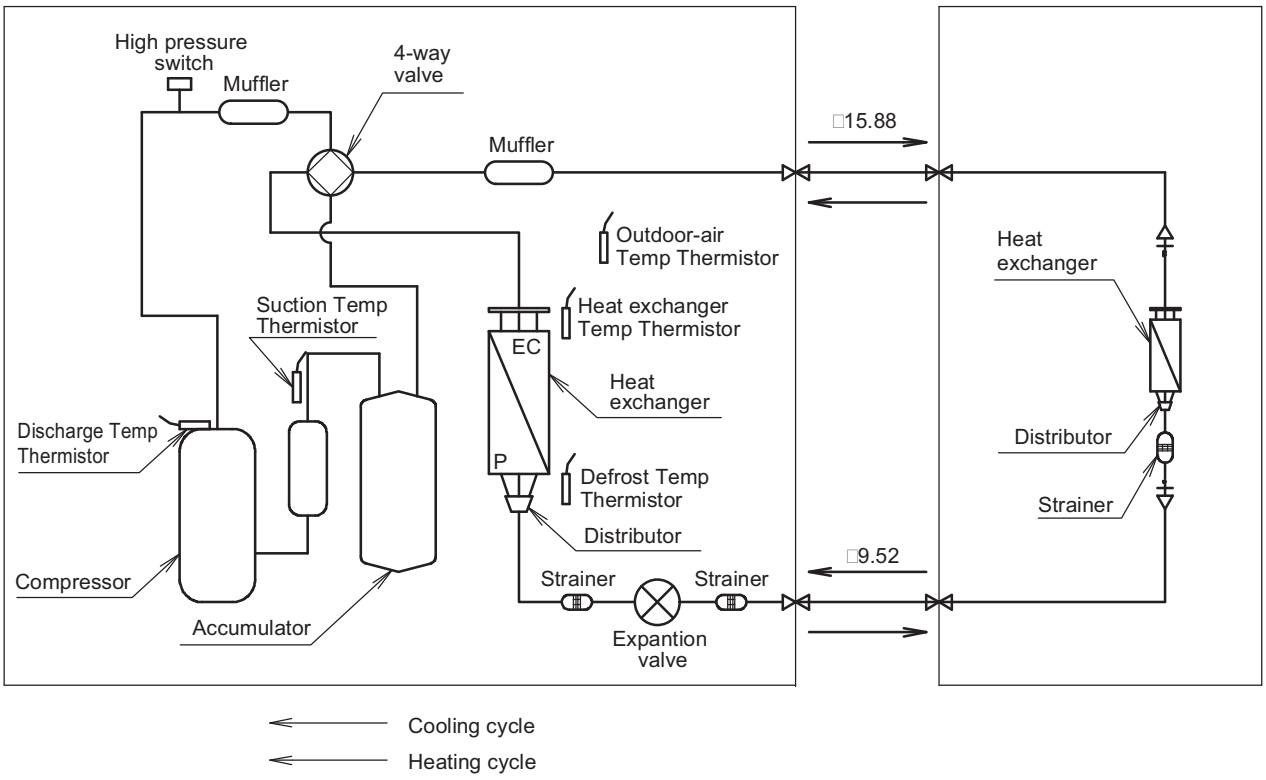

1-3. Refrigerant Flow Diagram

Outdoor Units: U-100PEY1E5 / U-100PEY1E8

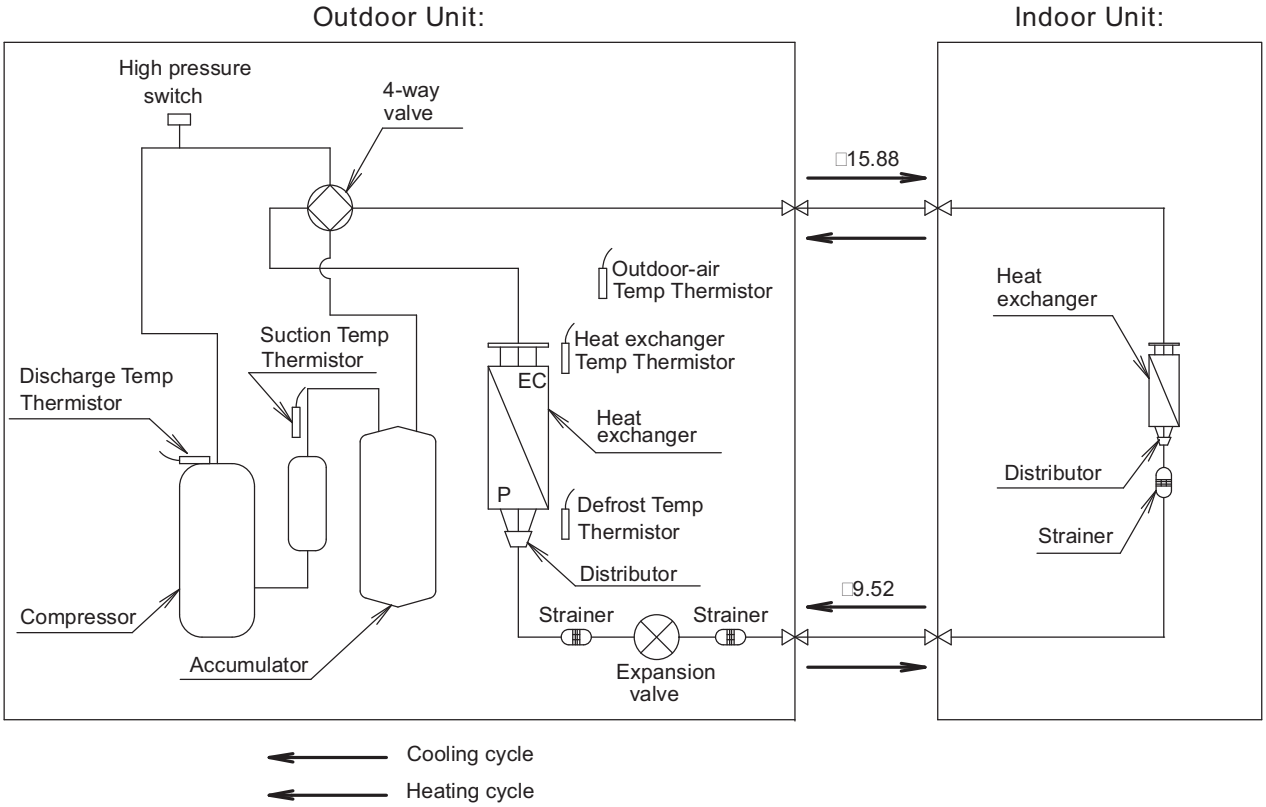

Outdoor Units: U-125PEY1E5 / U-125PEY1E8

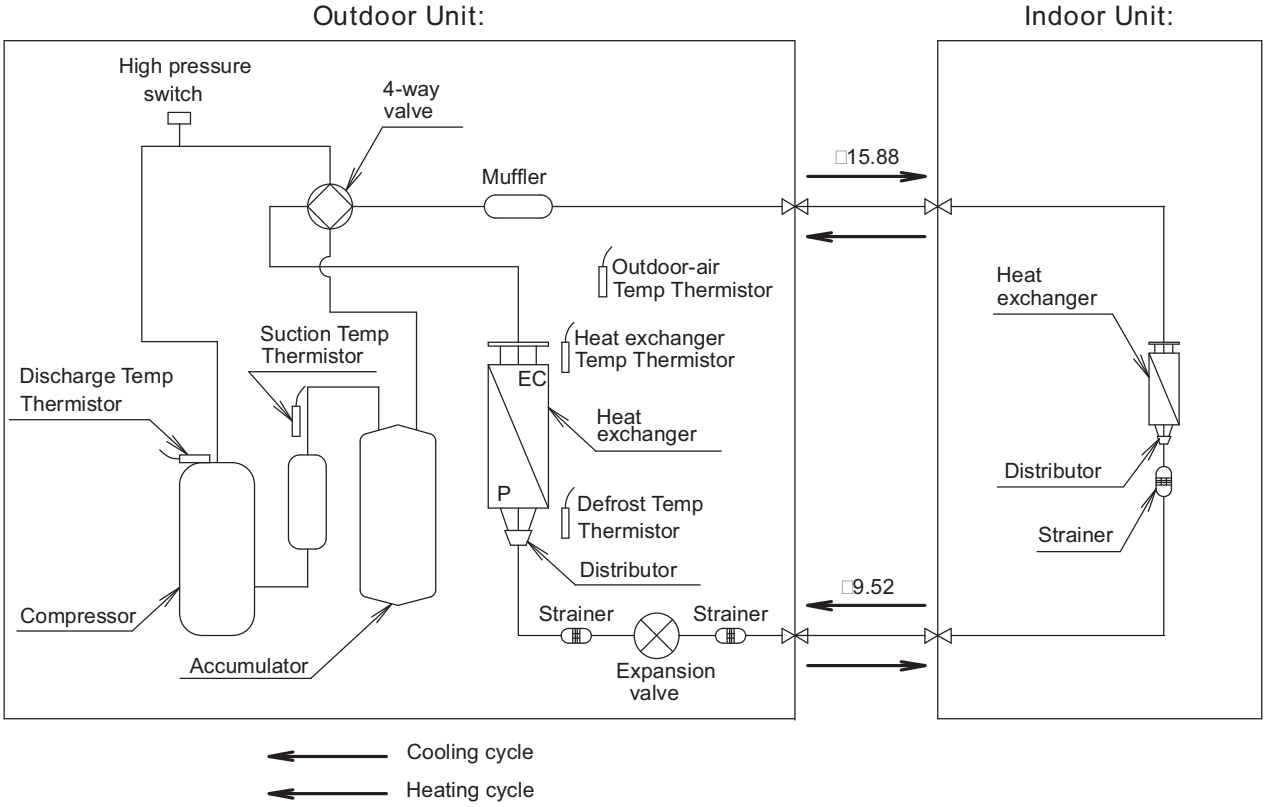

1-4. Operationg Range

Type PE1

	Temperature	Indoor air intake temp.	Outdoor air intake temp.
Cooling	Maximum	32°C DB / 25°C WB	46°C DB
	Minimum	18°C DB / 14°C WB	-15°C DB
Heating	Maximum	30°C DB / □WB	24°C DB/18°C WB
	Minimum	16°C DB / □WB	-20°C DB / -20°C WB

Type PEY1

	Temperature	Indoor air intake temp.	Outdoor air intake temp.
Cooling	Maximum	32°C DB / 25°C WB	43°C DB
	Minimum	18°C DB / 14°C WB	-10°C DB
Heating	Maximum	30°C DB / □WB	24°C DB/18°C WB
	Minimum	16°C DB / □WB	-15°C DB / -15°C WB

1-5. Capacity Correction Graph According to Temperature Condition

PE1

U-50PE1E5 (For 50 Hz)

Cooling capacity ratio (maximum capacity)

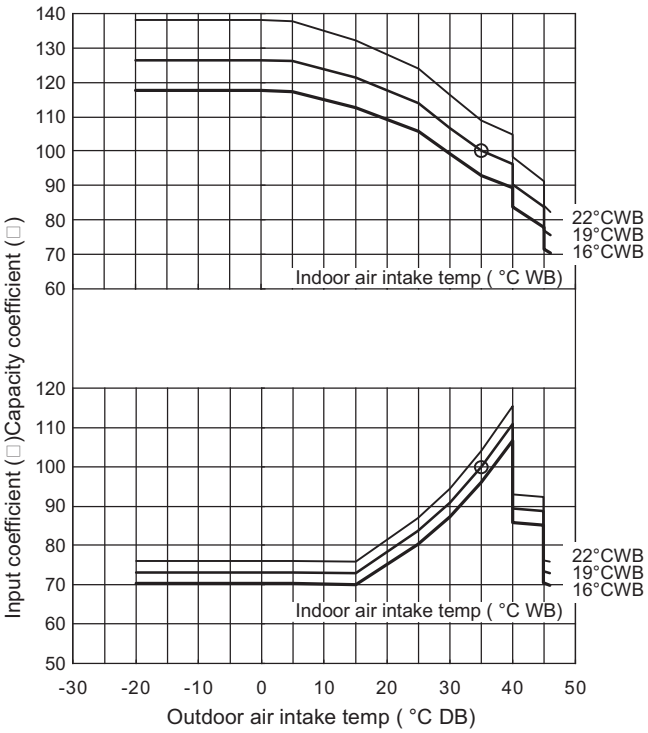

Heating capacity ratio (maximum capacity)

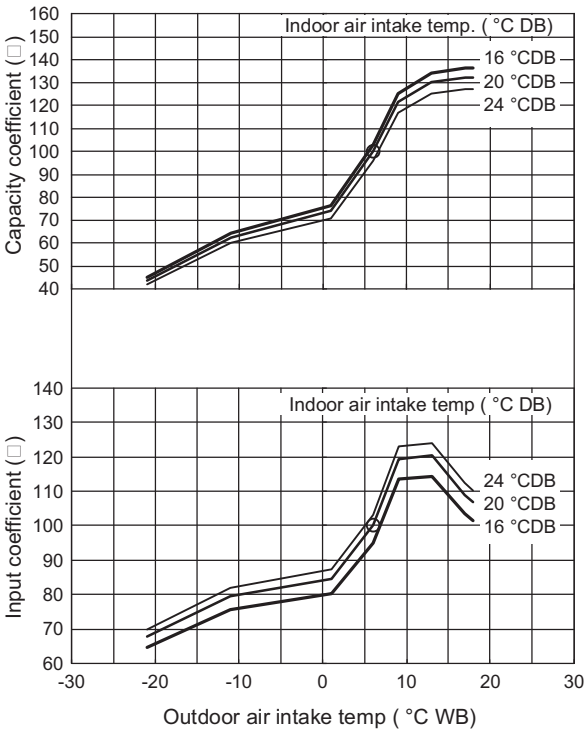

Cooling

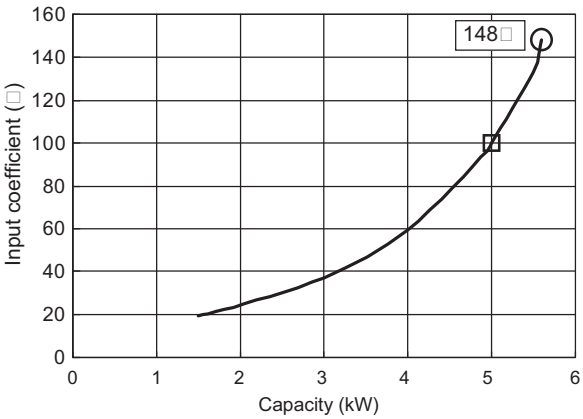

Heating

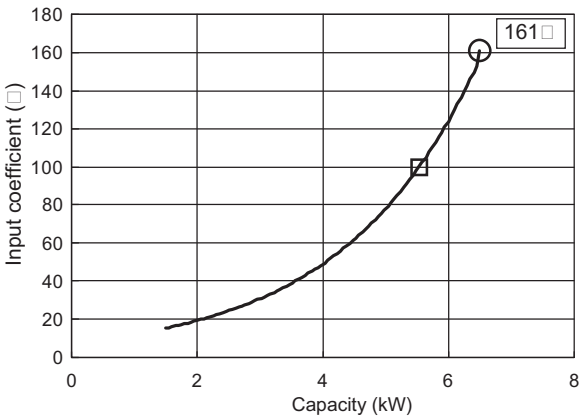

1-5. Capacity Correction Graph According to Temperature Condition

PE1

U-60PE1E5A (For 50 Hz)

Cooling capacity ratio (maximum capacity)

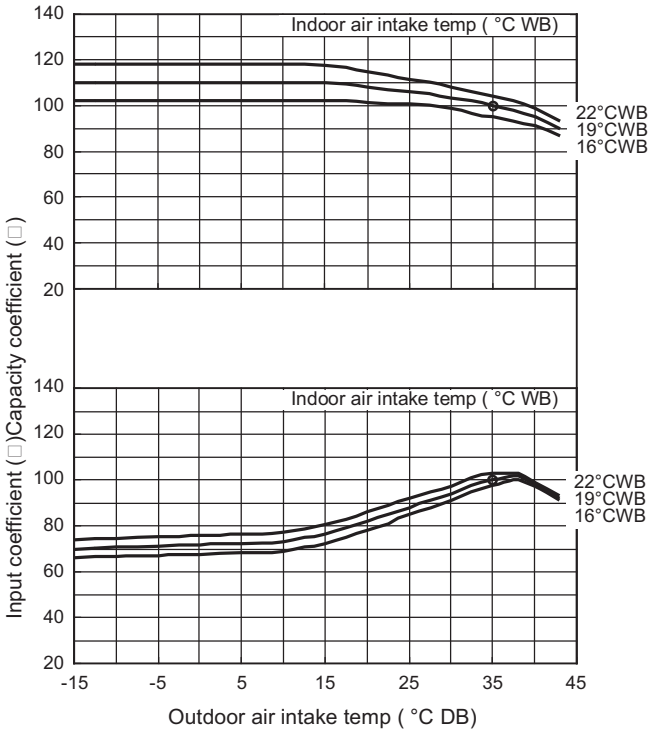

Heating capacity ratio (maximum capacity)

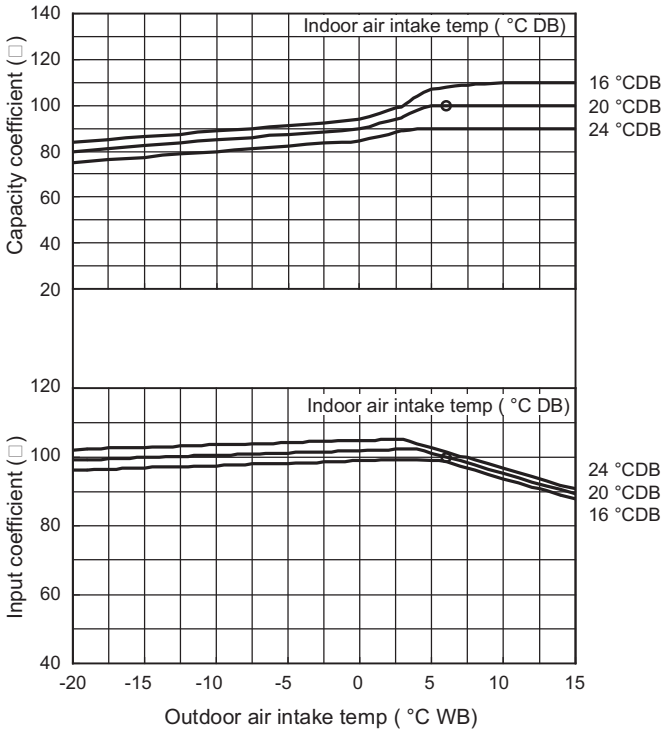

Cooling

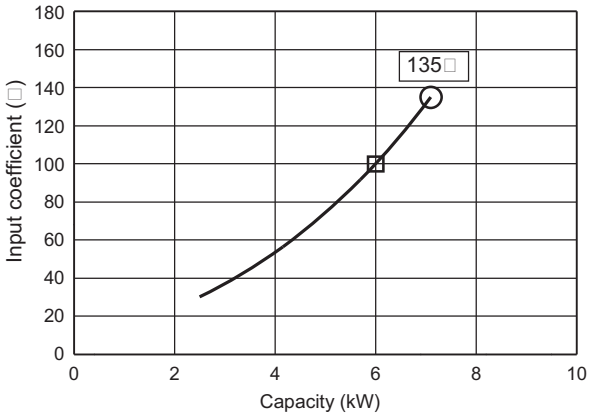

Heating

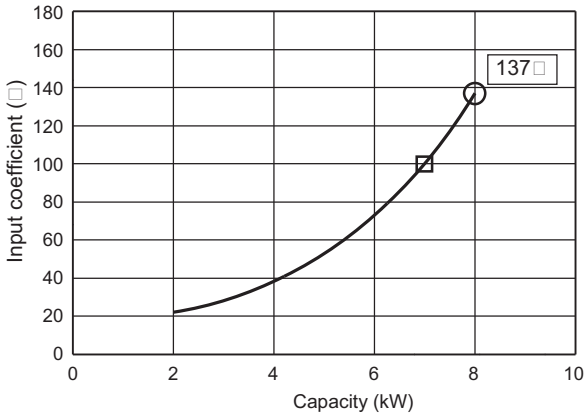

Outdoor unit heating capacity correction cofficient during of frosting/defrosting (RH approximately 85□)

Outdoor intake air temperature °C WB	-20	-15	-10	-9	-8	-7	-6	-5	-4	-3	-2	-1	0	1	2	3	4	5	6
Correction coefficient	1.0	1.0	0.97	0.96	0.96	0.95	0.94	0.91	0.89	0.88	0.87	0.87	0.87	0.88	0.89	0.91	0.92	0.95	1.0

To calculate the heating capacity with consideration for frosting/defrosting operation, multiply the heating capacity found from the capacity graph by the correction coefficient from the table above.

1-5. Capacity Correction Graph According to Temperature Condition

PE1

■ U-71PE1E5A (For 50 Hz) / U-71PE1E8A (For 50 Hz)

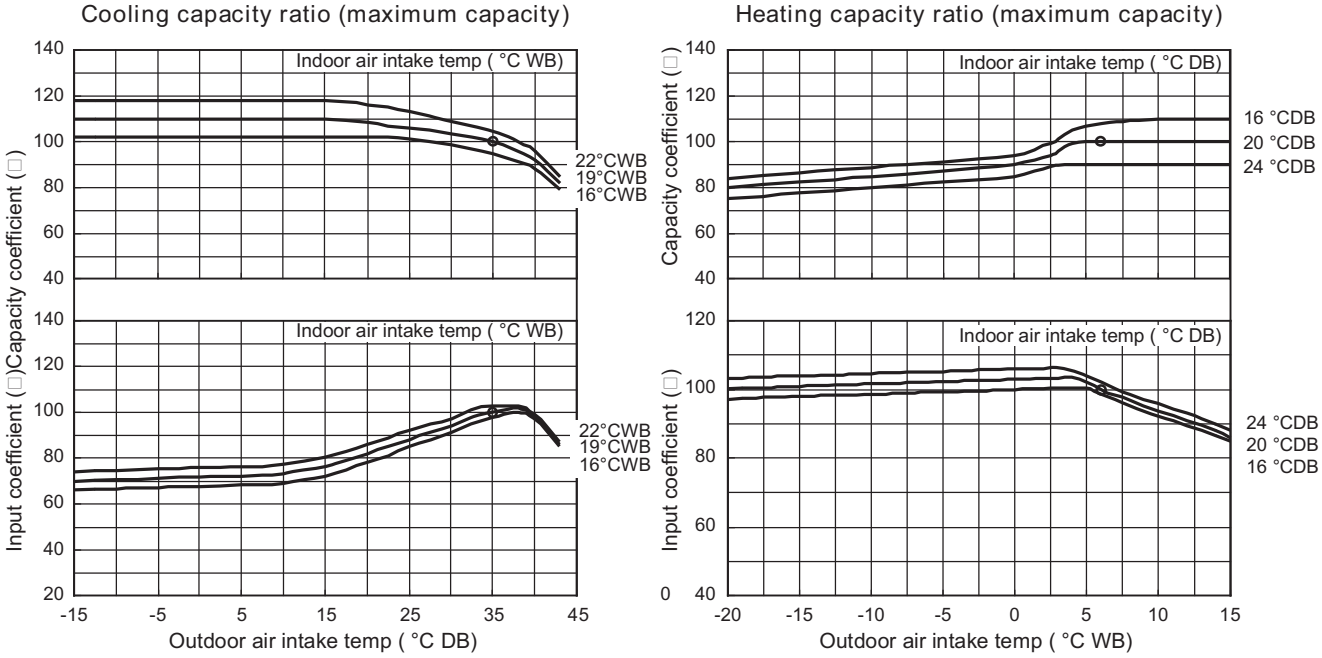

■ U-71PE1E5A (For 50 Hz)

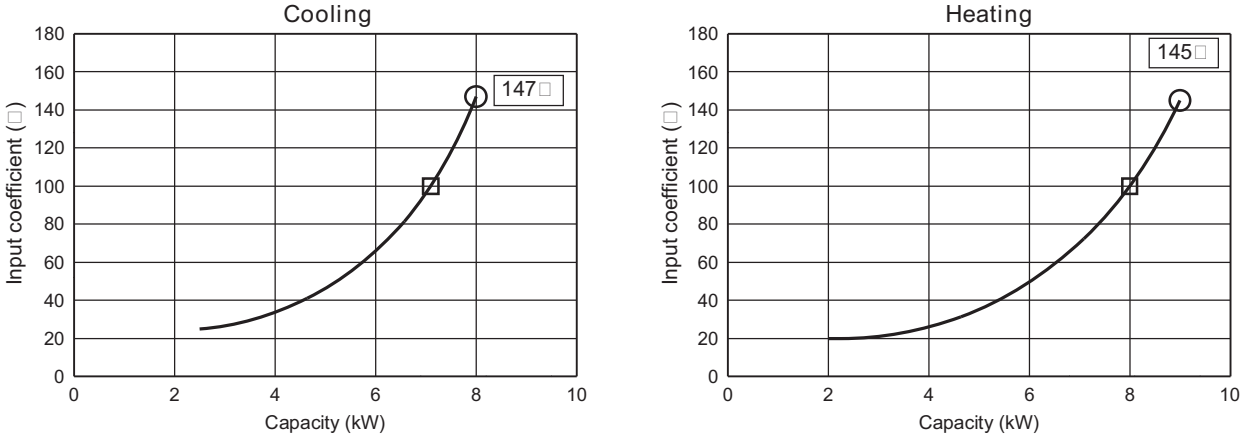

■ U-71PE1E8A (For 50 Hz)

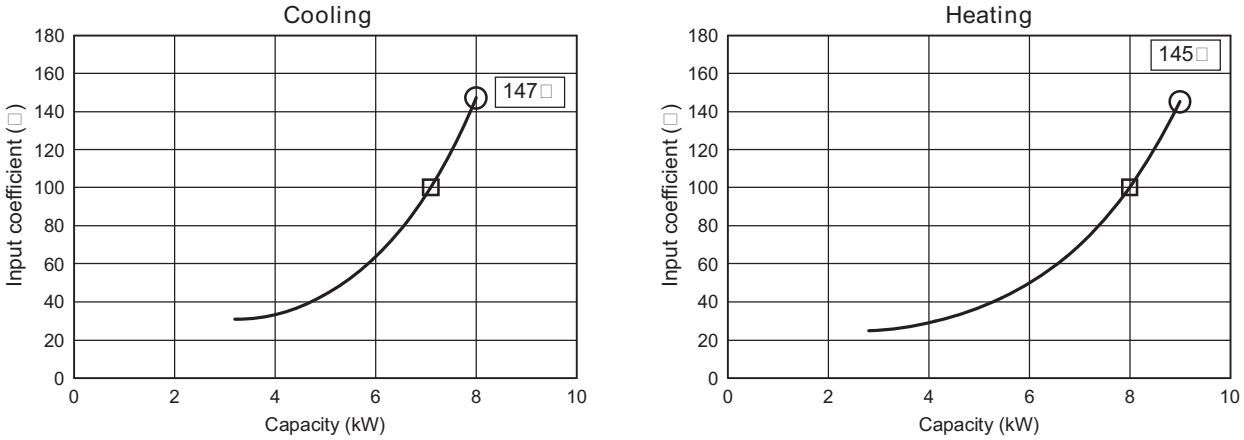

Outdoor unit heating capacity correction cofficient during of frosting/defrosting (RH approximately 85□)

Outdoor intake air temperature °C WB	-20	-15	-10	-9	-8	-7	-6	-5	-4	-3	-2	-1	0	1	2	3	4	5	6
Correction coefficient	1.0	1.0	0.97	0.96	0.96	0.95	0.94	0.91	0.89	0.88	0.87	0.87	0.87	0.88	0.89	0.91	0.92	0.95	1.0

To calculate the heating capacity with consideration for frosting/defrosting operation, multiply the heating capacity found from the capacity graph by the correction coefficient from the table above.

1-5. Capacity Correction Graph According to Temperature Condition

PE1

U-100PE1E5A (For 50 Hz) / U-100PE1E8A (For 50 Hz)

Cooling capacity ratio (maximum capacity)

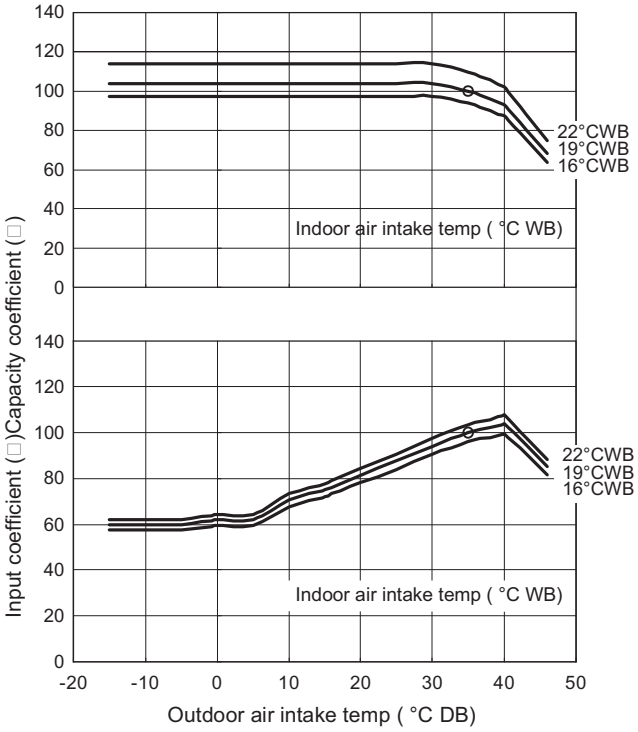

Heating capacity ratio (maximum capacity)

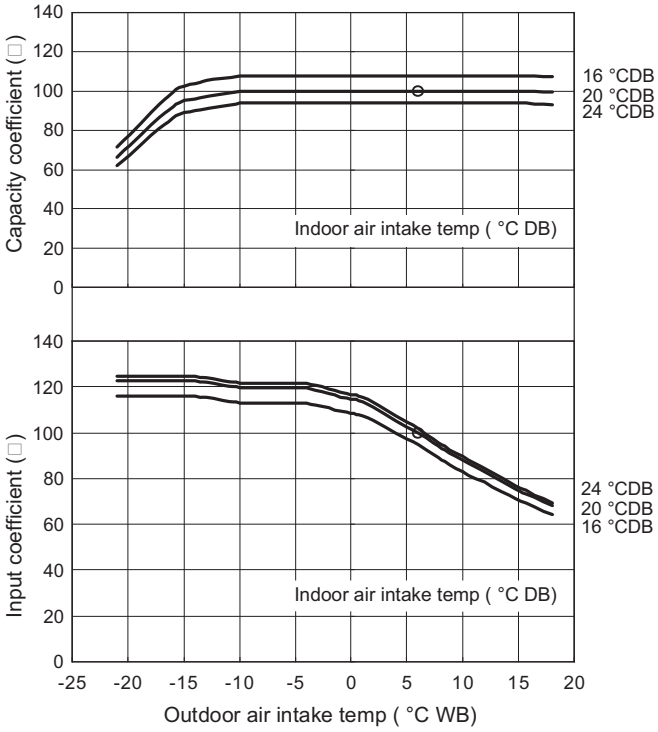

Cooling

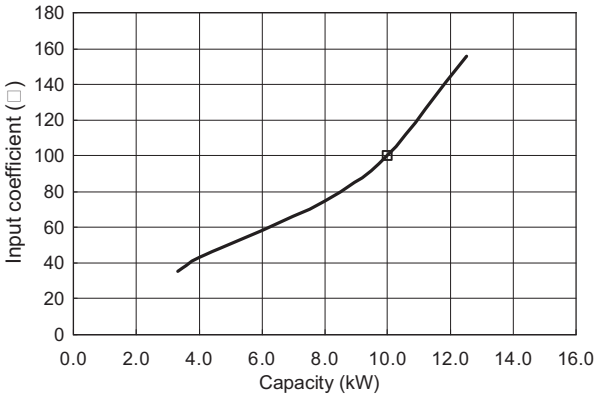

Heating

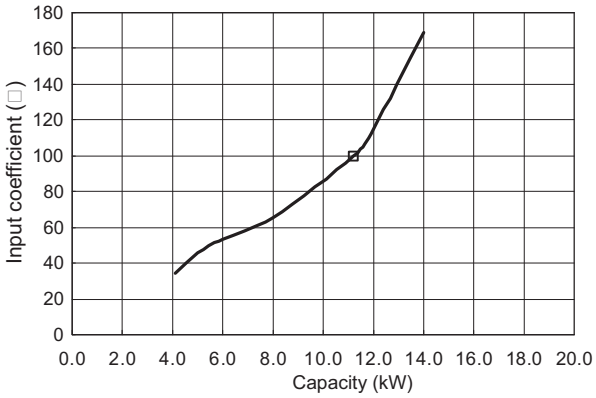

Outdoor unit heating capacity correction cofficient during of frosting/defrosting (RH approximately 85□)

Outdoor intake air temperature °C WB	-20	-15	-10	-9	-8	-7	-6	-5	-4	-3	-2	-1	0	1	2	3	4	5	6	7	8	9	10
Correction coefficient	0.86	0.86	0.86	0.86	0.86	0.86	0.86	0.86	0.86	0.86	0.86	0.84	0.84	0.82	0.8	0.8	0.82	0.84	0.86	0.88	0.88	1	1

To calculate the heating capacity with consideration for frosting/defrosting operation, multiply the heating capacity found from the capacity graph by the correction coefficient from the table above.

1-5. Capacity Correction Graph According to Temperature Condition

PE1

U-125PE1E5A (For 50 Hz) / U-125PE1E8A (For 50 Hz)

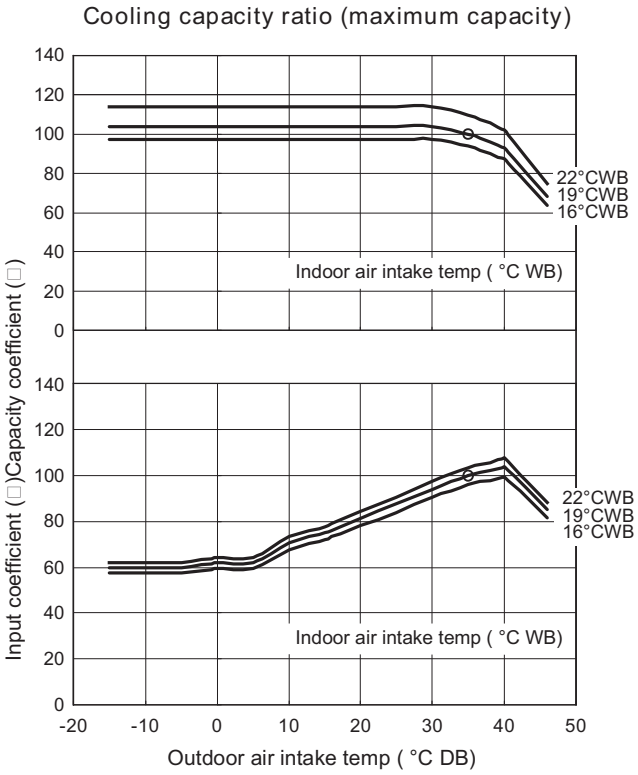

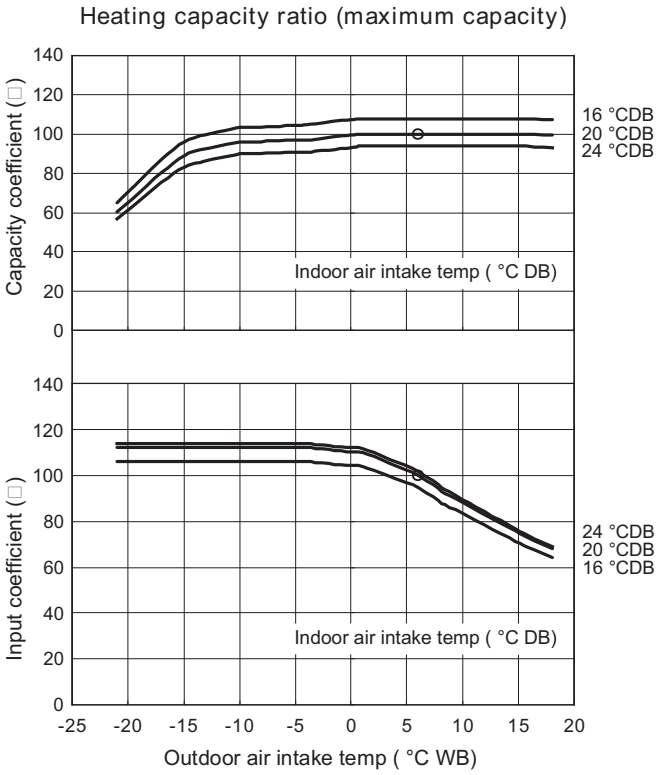

Cooling

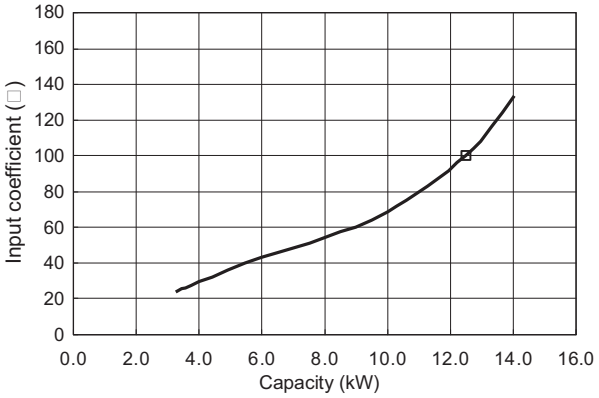

Heating

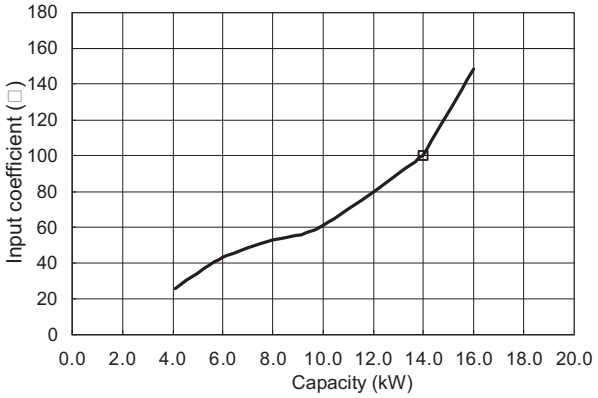

Outdoor unit heating capacity correction cofficient during of frosting/defrosting (RH approximately 85□)

Outdoor intake air temperature °C WB	-20	-15	-10	-9	-8	-7	-6	-5	-4	-3	-2	-1	0	1	2	3	4	5	6	7	8	9	10
Correction coefficient	0.86	0.86	0.86	0.86	0.86	0.86	0.86	0.86	0.86	0.86	0.86	0.84	0.84	0.82	0.8	0.8	0.82	0.84	0.86	0.88	0.88	1	1

To calculate the heating capacity with consideration for frosting/defrosting operation, multiply the heating capacity found from the capacity graph by the correction coefficient from the table above.

1-5. Capacity Correction Graph According to Temperature Condition

PE1

U-140PE1E5A (For 50 Hz) / U-140PE1E8A (For 50 Hz)

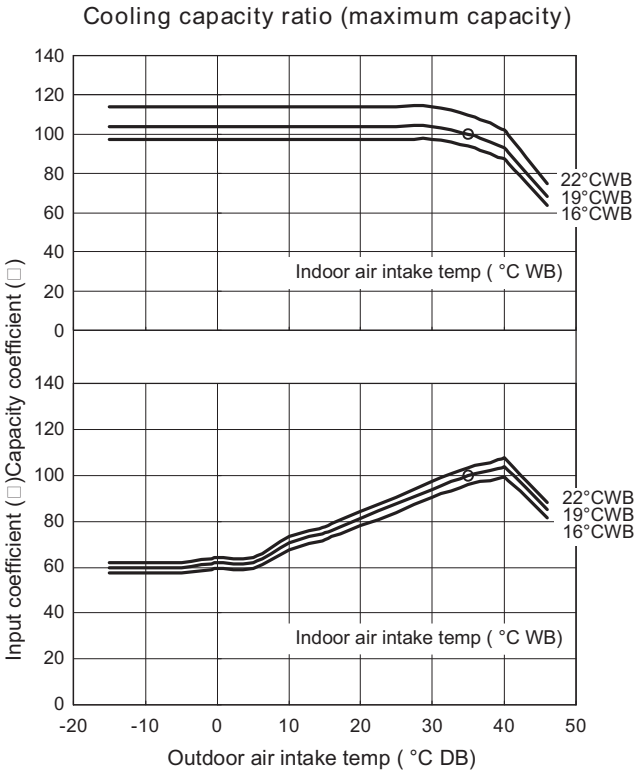

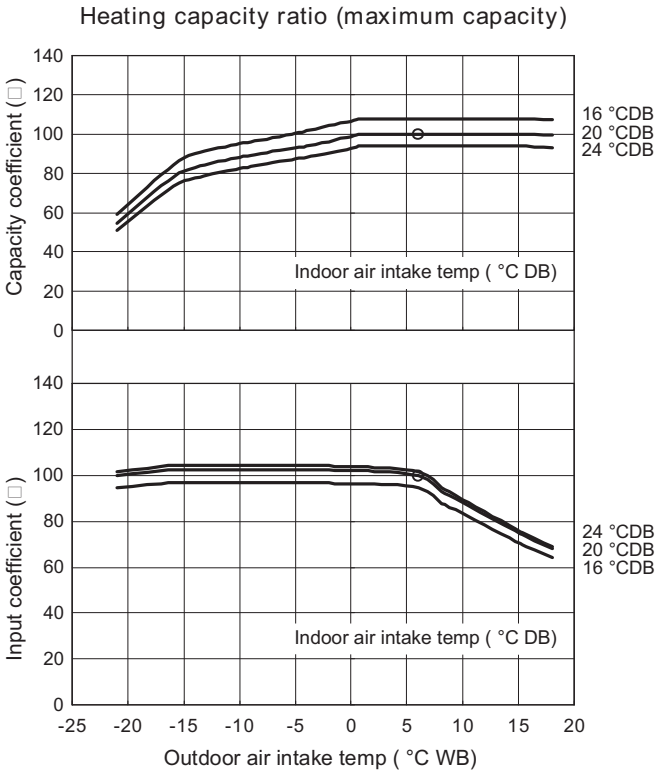

Cooling

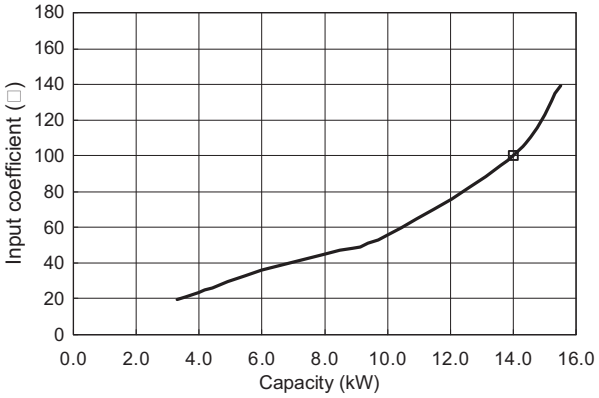

Heating

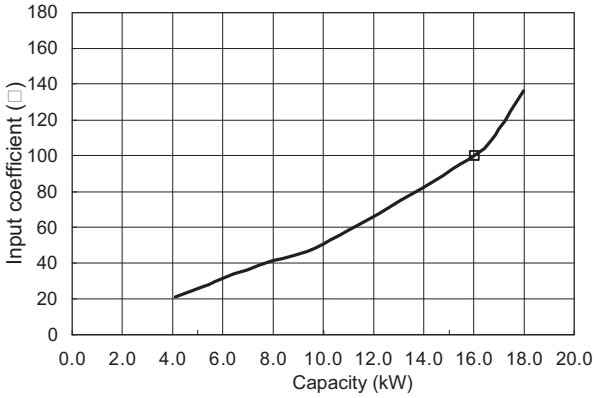

Outdoor unit heating capacity correction cofficient during of frosting/defrosting (RH approximately 85□)

Outdoor intake air temperature °C WB	-20	-15	-10	-9	-8	-7	-6	-5	-4	-3	-2	-1	0	1	2	3	4	5	6	7	8	9	10
Correction coefficient	0.86	0.86	0.86	0.86	0.86	0.86	0.86	0.86	0.86	0.86	0.86	0.84	0.84	0.82	0.8	0.8	0.82	0.84	0.86	0.88	0.88	1	1

To calculate the heating capacity with consideration for frosting/defrosting operation, multiply the heating capacity found from the capacity graph by the correction coefficient from the table above.

1-5. Capacity Correction Graph According to Temperature Condition

PEY1

U-60PEY1E5 (For 50 Hz)

Cooling capacity ratio (maximum capacity)

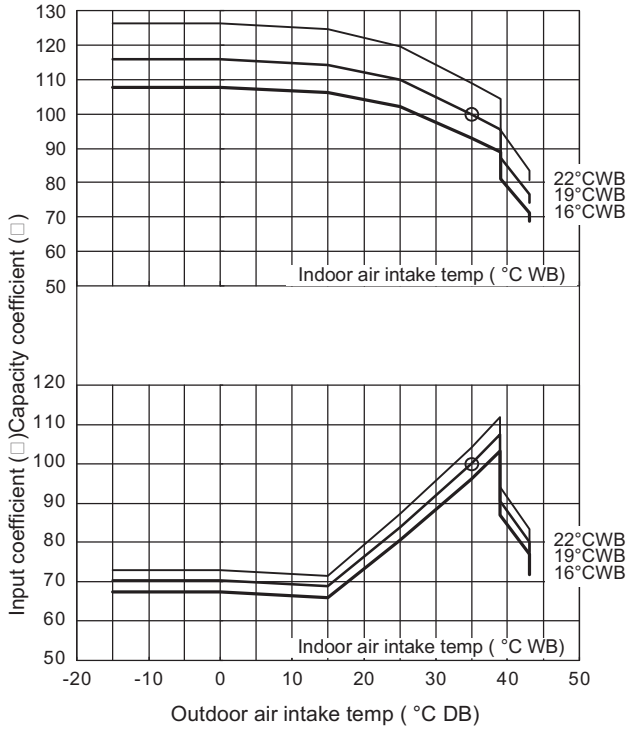

Heating capacity ratio (maximum capacity)

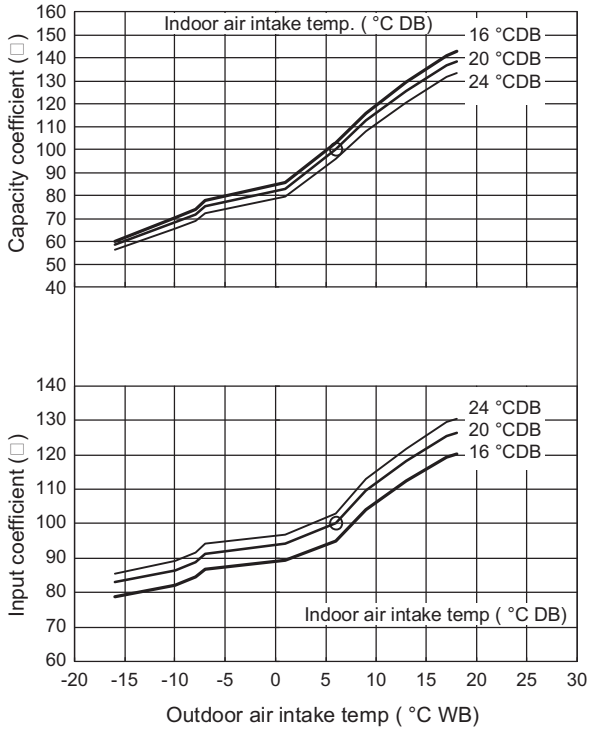

Cooling

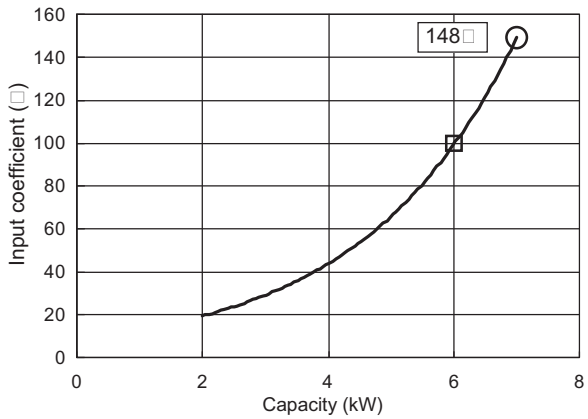

Heating

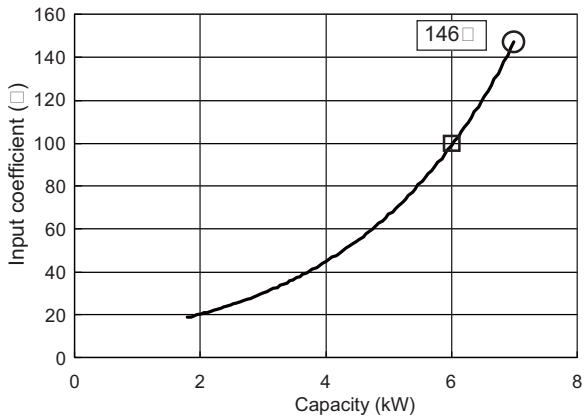

1-5. Capacity Correction Graph According to Temperature Condition

PEY1

U-71PEY1E5 (For 50 Hz)

Cooling capacity ratio (maximum capacity)

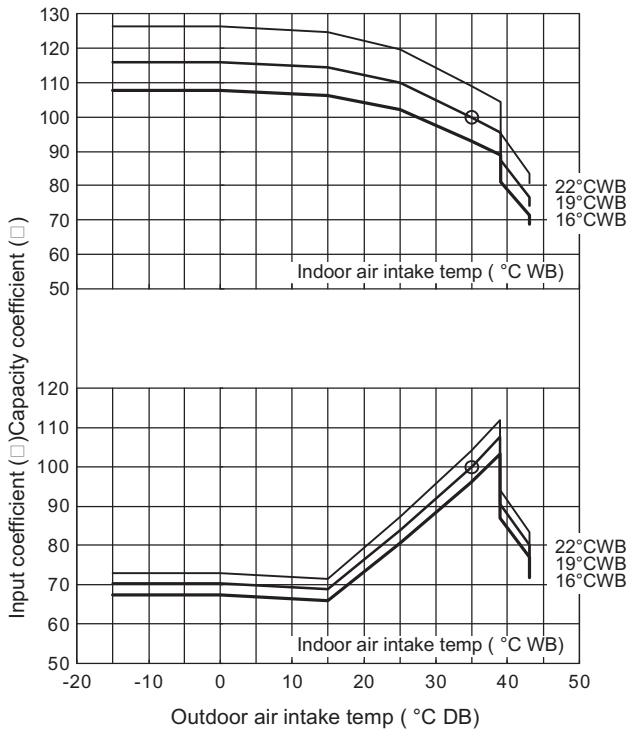

Heating capacity ratio (maximum capacity)

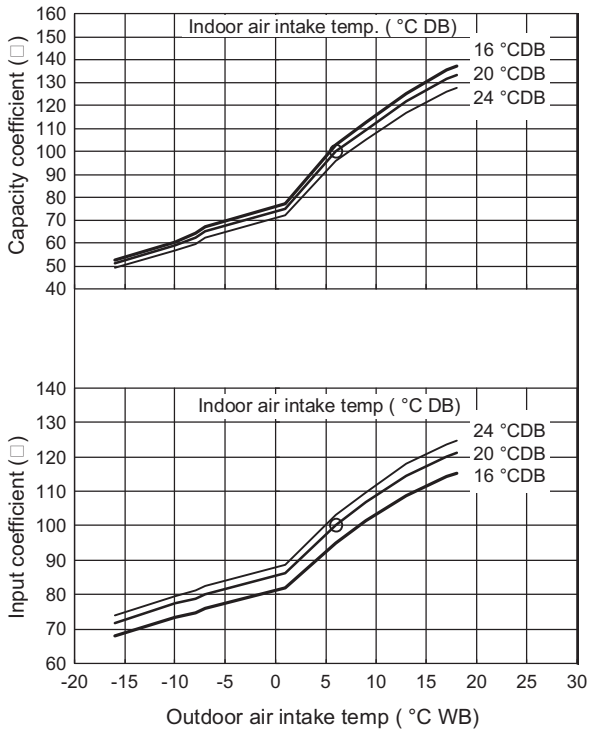

Cooling

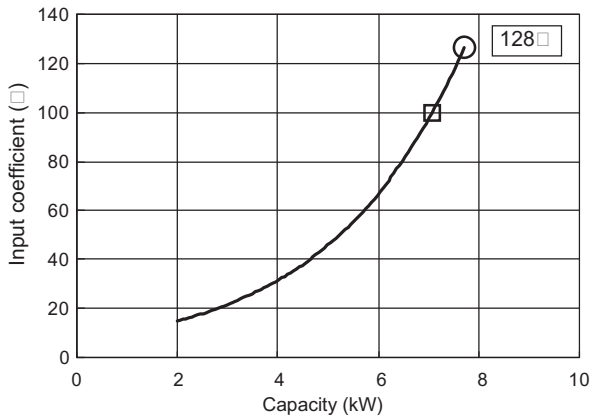

Heating

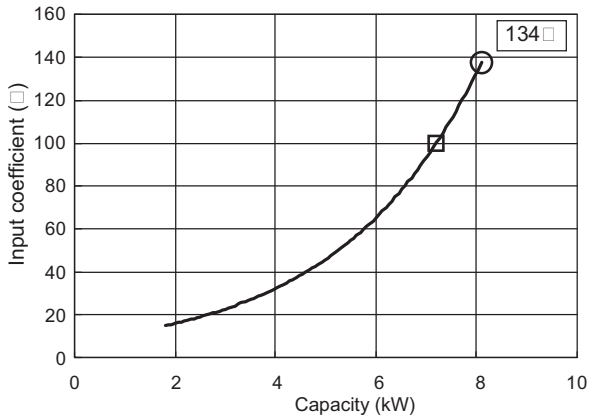

1-5. Capacity Correction Graph According to Temperature Condition

PEY1

U-100PEY1E5 (For 50 Hz) / U-100PEY1E8 (For 50 Hz)

Cooling capacity ratio (maximum capacity)

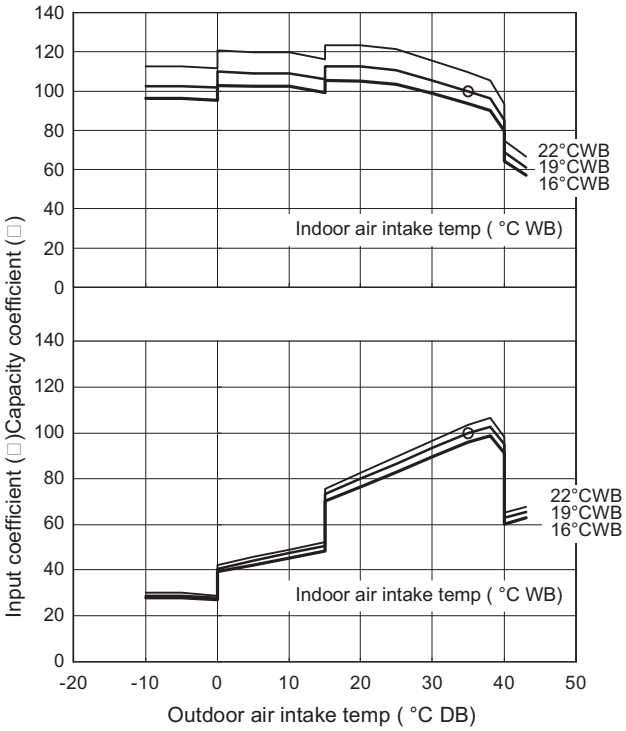

Heating capacity ratio (maximum capacity)

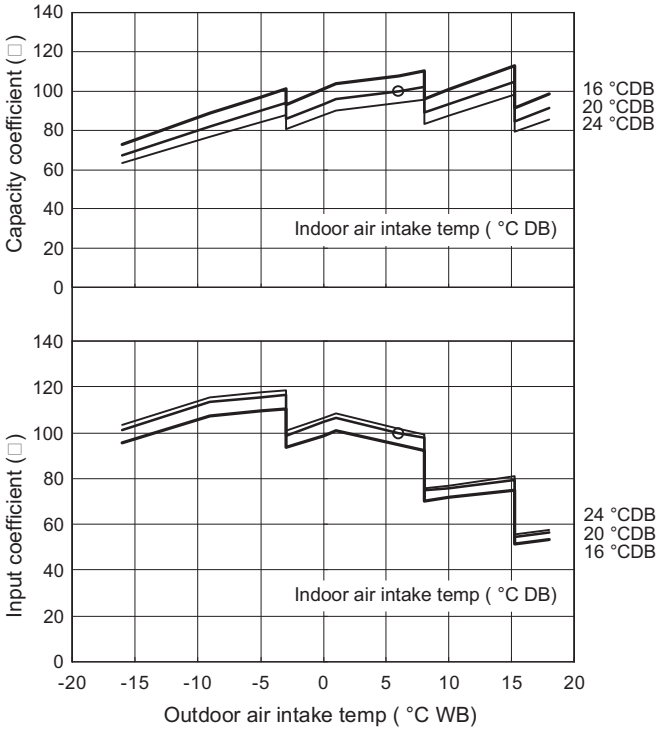

Cooling

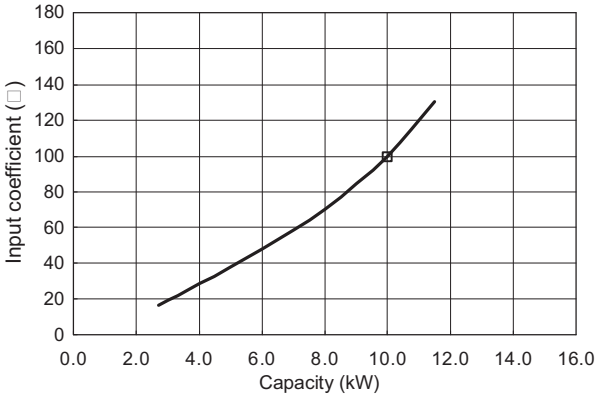

Heating

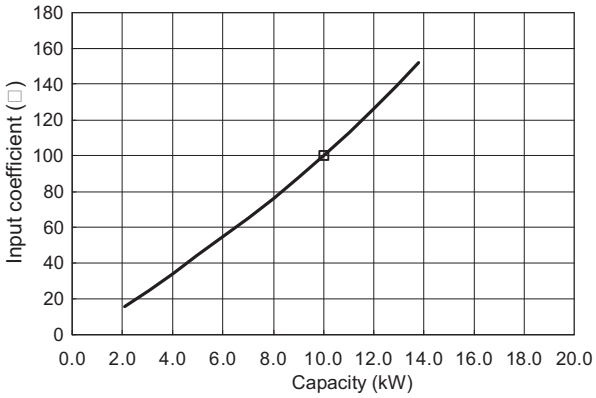

Outdoor unit heating capacity correction cofficient during of frosting/defrosting (RH approximately 85□)

Outdoor intake air temperature °C WB	-20	-15	-10	-9	-8	-7	-6	-5	-4	-3	-2	-1	0	1	2	3	4	5	6	7	8	9	10
Correction coefficient	0.86	0.86	0.86	0.86	0.86	0.86	0.86	0.86	0.86	0.86	0.86	0.84	0.84	0.82	0.8	0.8	0.82	0.84	0.86	0.88	0.88	1	1

To calculate the heating capacity with consideration for frosting/defrosting operation, multiply the heating capacity found from the capacity graph by the correction coefficient from the table above.

1-5. Capacity Correction Graph According to Temperature Condition

PEY1

U-125PEY1E5 (For 50 Hz) / U-125PEY1E8 (For 50 Hz)

Cooling capacity ratio (maximum capacity)

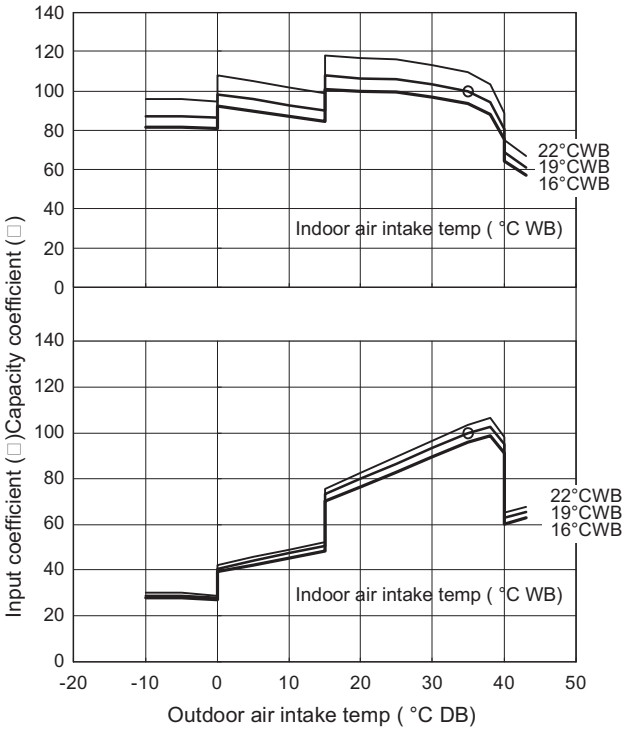

Heating capacity ratio (maximum capacity)

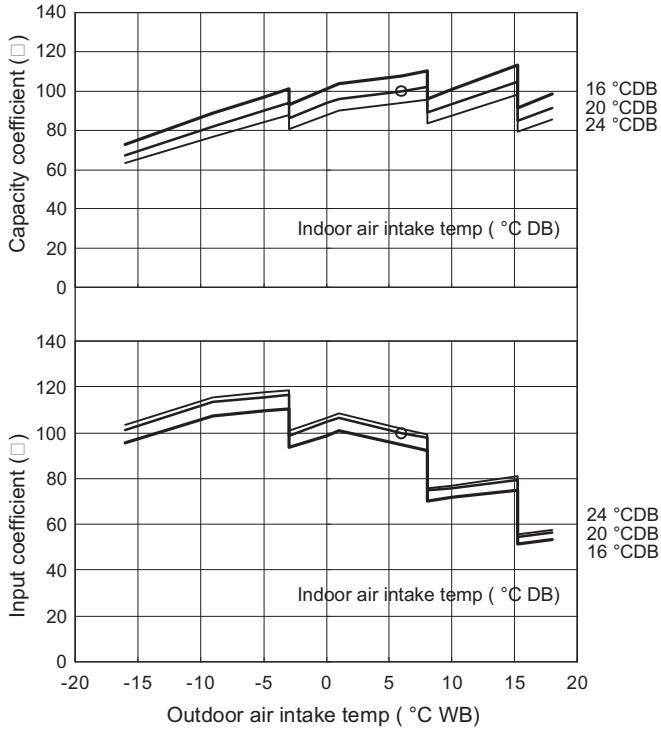

Cooling

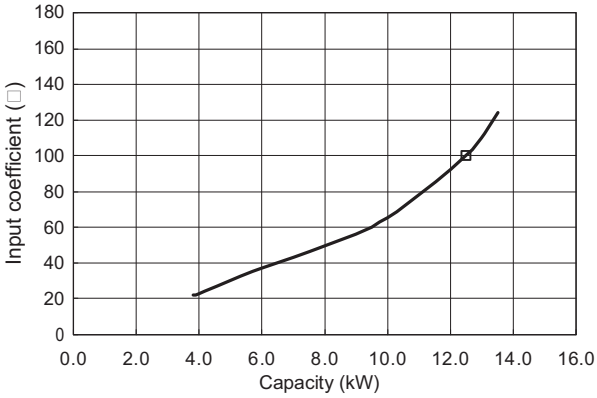

Heating

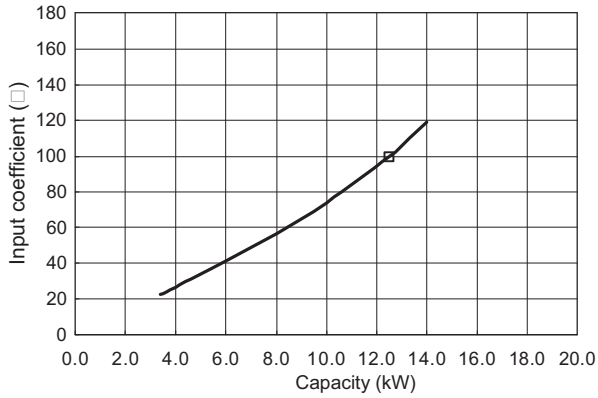

Outdoor unit heating capacity correction cofficient during of frosting/defrosting (RH approximately 85□)

Outdoor intake air temperature °C WB	-20	-15	-10	-9	-8	-7	-6	-5	-4	-3	-2	-1	0	1	2	3	4	5	6	7	8	9	10
Correction coefficient	0.86	0.86	0.86	0.86	0.86	0.86	0.86	0.86	0.86	0.86	0.86	0.84	0.84	0.82	0.8	0.8	0.82	0.84	0.86	0.88	0.88	1	1

To calculate the heating capacity with consideration for frosting/defrosting operation, multiply the heating capacity found from the capacity graph by the correction coefficient from the table above.

1-5. Capacity Correction Graph According to Temperature Condition

PEY1

U-140PEY1E8 (For 50 Hz)

Cooling capacity ratio (maximum capacity)

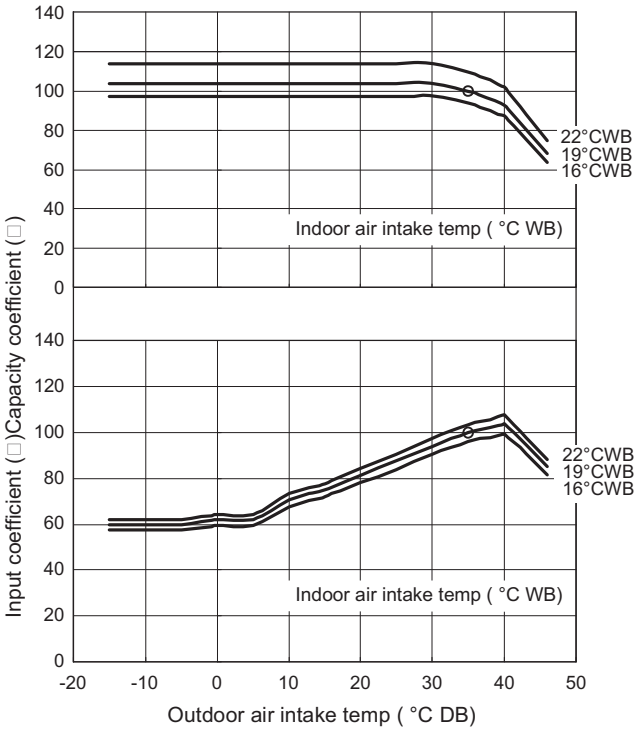

Heating capacity ratio (maximum capacity)

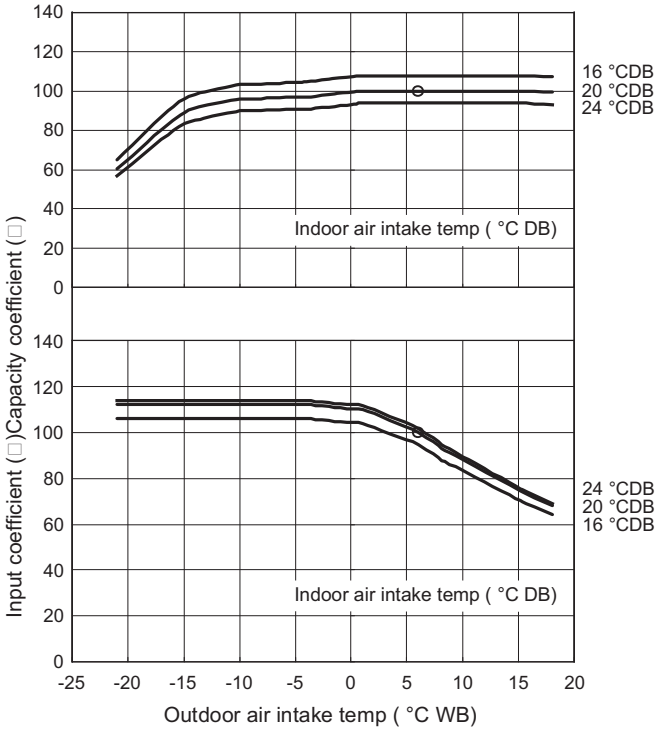

Cooling

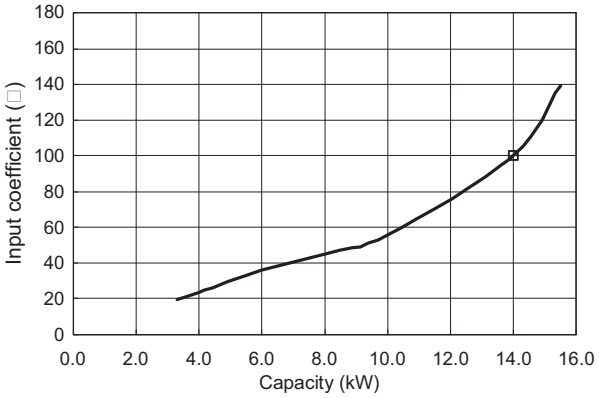

Heating

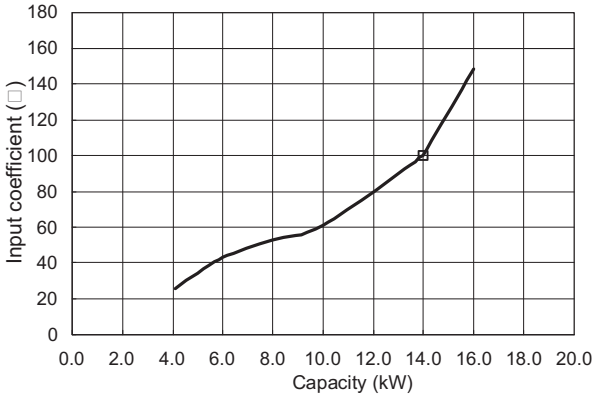

Outdoor unit heating capacity correction cofficient during of frosting/defrosting (RH approximately 85□)

Outdoor intake air temperature °C WB	-20	-15	-10	-9	-8	-7	-6	-5	-4	-3	-2	-1	0	1	2	3	4	5	6	7	8	9	10
Correction coefficient	0.86	0.86	0.86	0.86	0.86	0.86	0.86	0.86	0.86	0.86	0.86	0.84	0.84	0.82	0.8	0.8	0.82	0.84	0.86	0.88	0.88	1	1

To calculate the heating capacity with consideration for frosting/defrosting operation, multiply the heating capacity found from the capacity graph by the correction coefficient from the table above.

1-6. Noise Criterion Curves

(A) Indoor Units:

4 WAY Cassette Type

High
Low

MODEL	: S-36PU1E5A
SOUND LEVEL	: High 30 dB(A)
	Low 27 dB(A)
CONDITION	: Under the unit 1.5m
SOURCE	: 220-230-240V, 1 phase, 50Hz

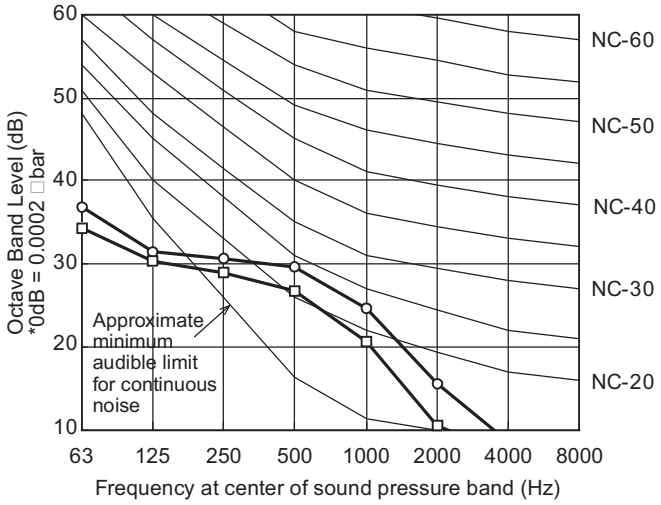

MODEL	: S-45PU1E5A
SOUND LEVEL	: High 31 dB(A)
	Low 27 dB(A)
CONDITION	: Under the unit 1.5m
SOURCE	: 220-230-240V, 1 phase, 50Hz

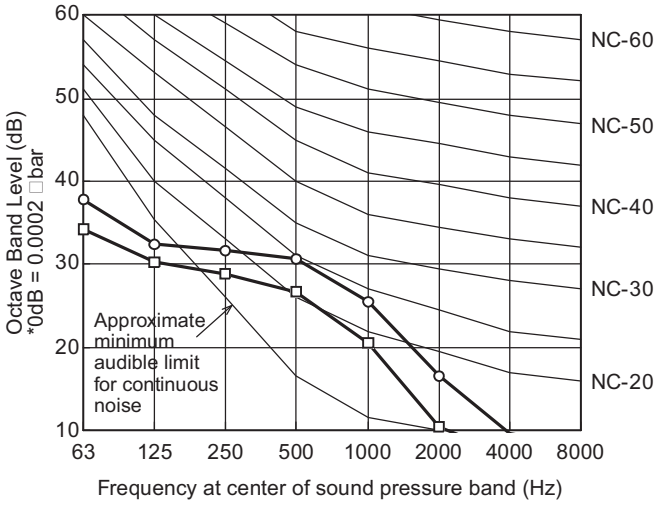

MODEL	: S-50PU1E5A
SOUND LEVEL	: High 32 dB(A)
	Low 27 dB(A)
CONDITION	: Under the unit 1.5m
SOURCE	: 220-230-240V, 1 phase, 50Hz

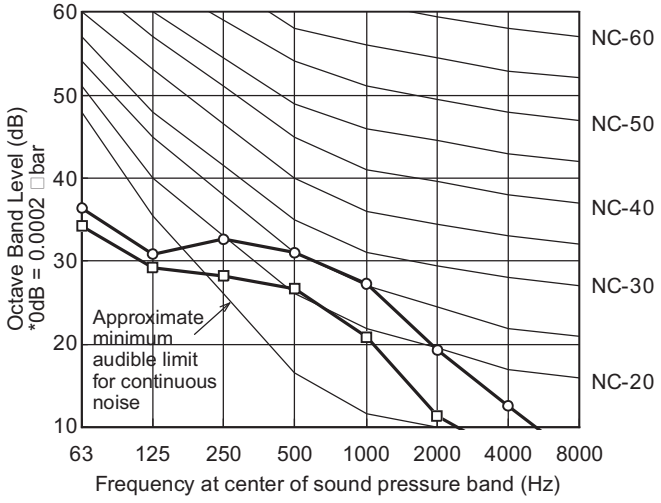

MODEL	: S-60PU1E5A
SOUND LEVEL	: High 36 dB(A)
	Low 28 dB(A)
CONDITION	: Under the unit 1.5m
SOURCE	: 220-230-240V, 1 phase, 50Hz

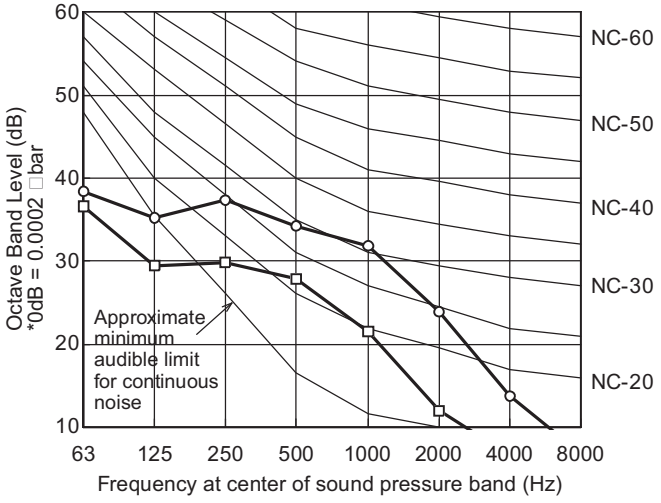

1-6. Noise Criterion Curves

(A) Indoor Units:

4 WAY Cassette Type

High
Low

MODEL	: S-71PU1E5A
SOUND LEVEL	: High 37 dB(A)
	Low 28 dB(A)
CONDITION	: Under the unit 1.5m
SOURCE	: 220-230-240V, 1 phase, 50Hz

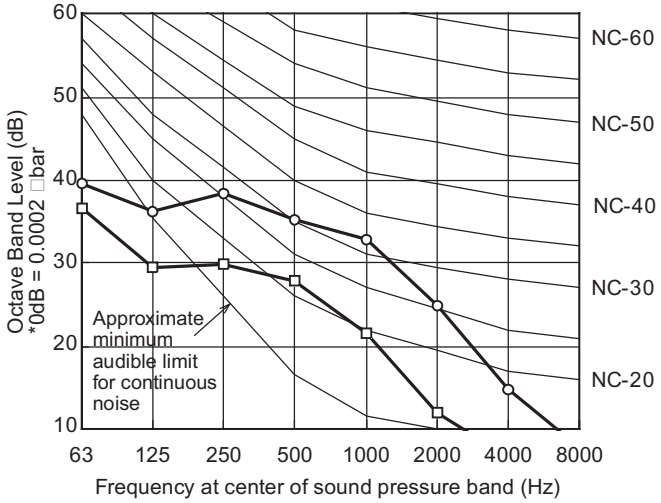

MODEL	: S-100PU1E5A
SOUND LEVEL	: High 44 dB(A)
	Low 32 dB(A)
CONDITION	: Under the unit 1.5m
SOURCE	: 220-230-240V, 1 phase, 50Hz

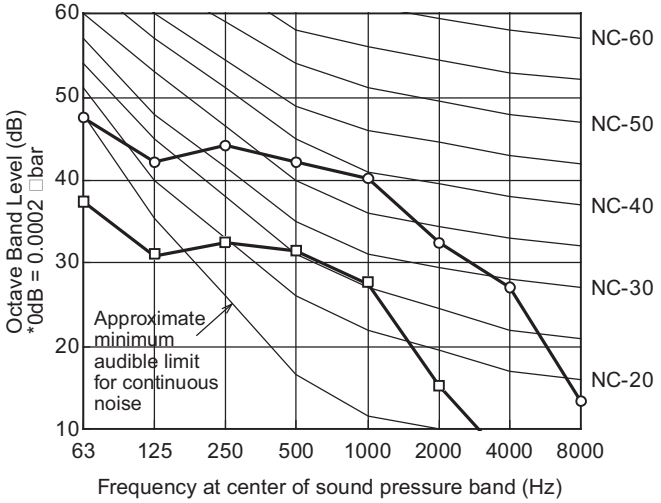

MODEL	: S-125PU1E5A
SOUND LEVEL	: High 45 dB(A)
	Low 33 dB(A)
CONDITION	: Under the unit 1.5m
SOURCE	: 220-230-240V, 1 phase, 50Hz

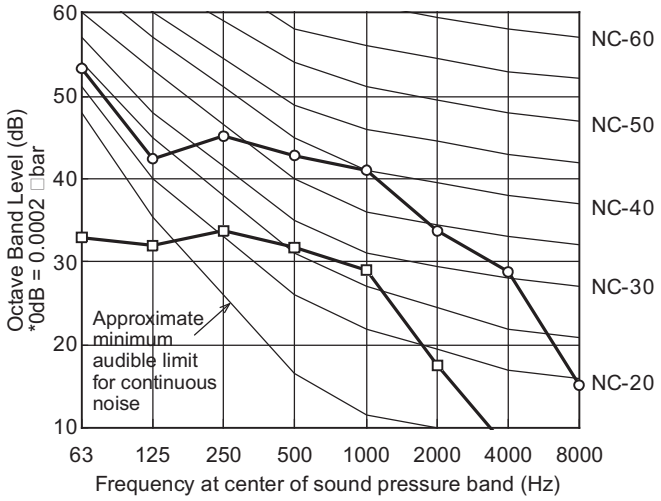

MODEL	: S-140PU1E5A
SOUND LEVEL	: High 46 dB(A)
	Low 34 dB(A)
CONDITION	: Under the unit 1.5m
SOURCE	: 220-230-240V, 1 phase, 50Hz

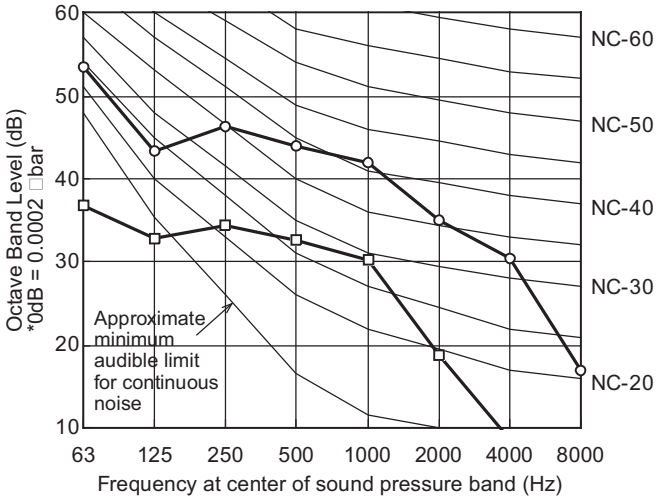

REMARKS:

1. Value obtained in the actual place where the unit is installed may be slightly higher than the values shown in this graph because of the conditions of operation, the structure of the building, the background noise and other factors.
2. The test results were obtained from an anechoic room.

NOTE

To evaluate □Noise level□the maximum number of the measured OCTAVE BAND SOUND PRESSURE LEVEL is used.
Read the number on each BAND CENTER FREQUENCIES (horizontal axis) ranging from 63 Hz to 8000 Hz and select the maximum value (vertical axis) among them.

1-6. Noise Criterion Curves

(A) Indoor Units:

Ceiling Type

—○— High
—□— Low

MODEL : S-36PT2E5A

SOUND LEVEL : High 36 dB(A)
Low 29 dB(A)

CONDITION : 1 m from front of outlet at height of 1 m

SOURCE : 220-230-240V, 1 phase, 50Hz

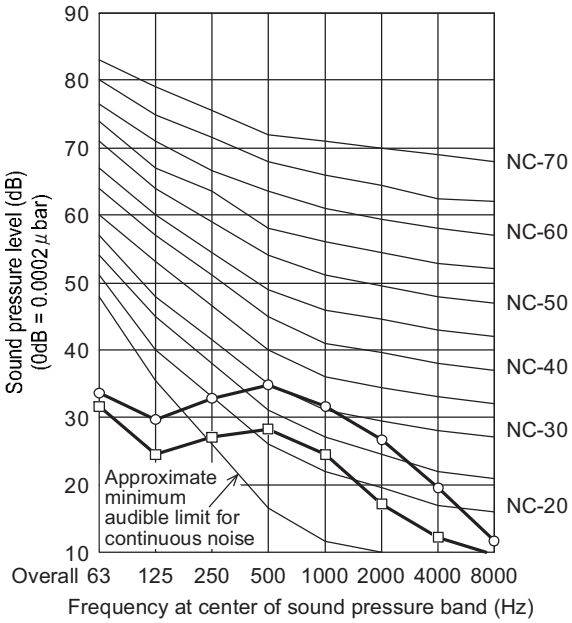

MODEL : S-45PT2E5A
S-50PT2E5A

SOUND LEVEL : High 37 dB(A)
Low 29 dB(A)

CONDITION : 1 m from front of outlet at height of 1 m

SOURCE : 220-230-240V, 1 phase, 50Hz

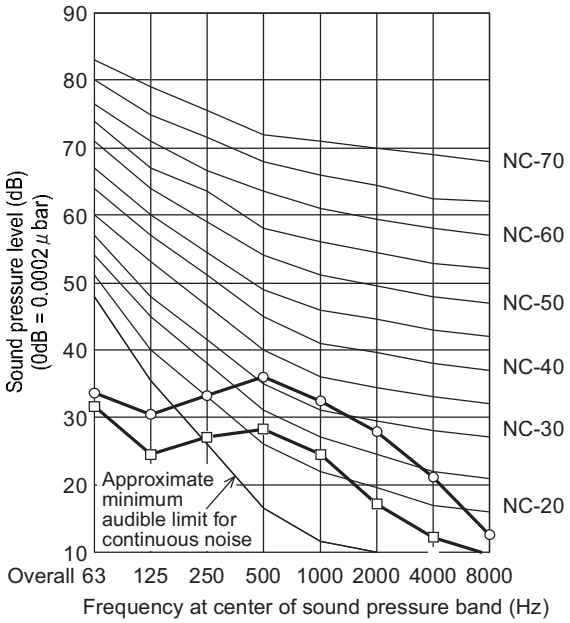

MODEL : S-60PT2E5A

SOUND LEVEL : High 38 dB(A)
Low 30 dB(A)

CONDITION : 1 m from front of outlet at height of 1 m

SOURCE : 220-230-240V, 1 phase, 50Hz

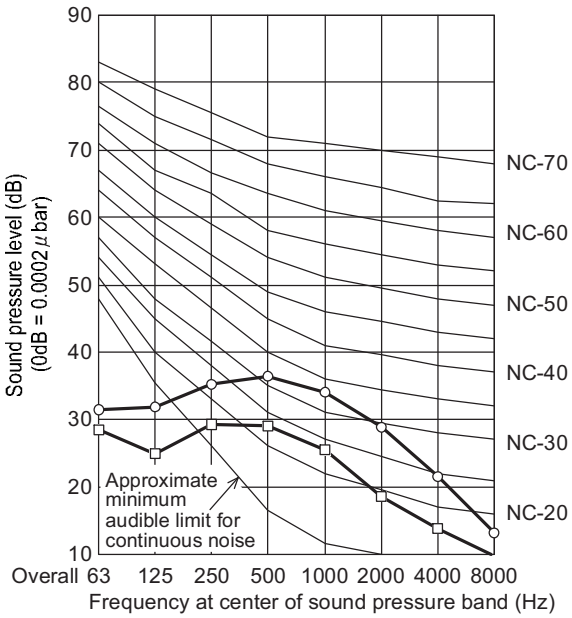

MODEL : S-71PT2E5A

SOUND LEVEL : High 39 dB(A)
Low 31 dB(A)

CONDITION : 1 m from front of outlet at height of 1 m

SOURCE : 220-230-240V, 1 phase, 50Hz

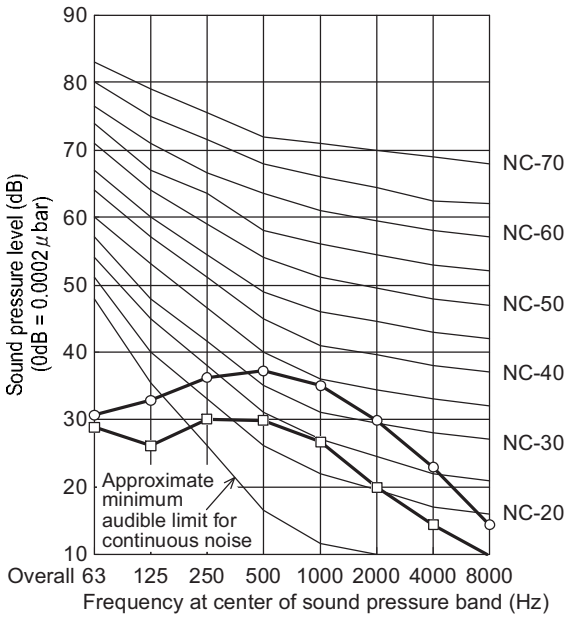

1-6. Noise Criterion Curves

(A) Indoor Units:

Ceiling Type

High
Low

MODEL : S-100PT2E5A

SOUND LEVEL :	High	42 dB(A)
	Low	35 dB(A)
CONDITION	: 1 m from front of outlet at height of 1 m	
SOURCE	: 220-230-240V, 1 phase, 50Hz	

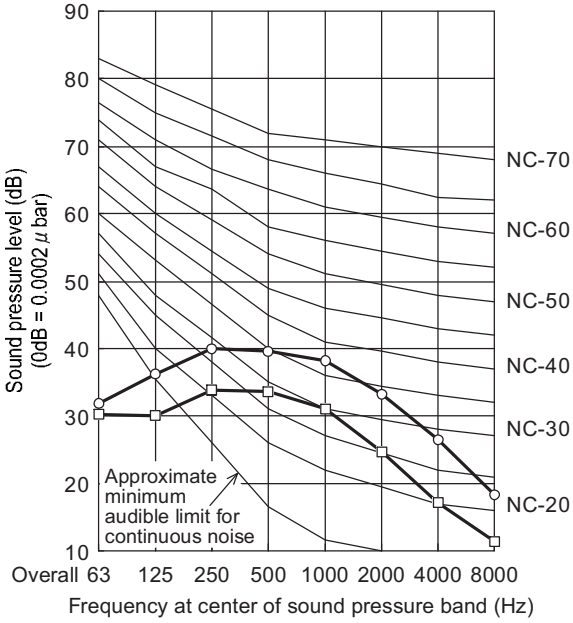

MODEL : S-125PT2E5A

SOUND LEVEL :	High	46 dB(A)
	Low	36 dB(A)
CONDITION	: 1 m from front of outlet at height of 1 m	
SOURCE	: 220-230-240V, 1 phase, 50Hz	

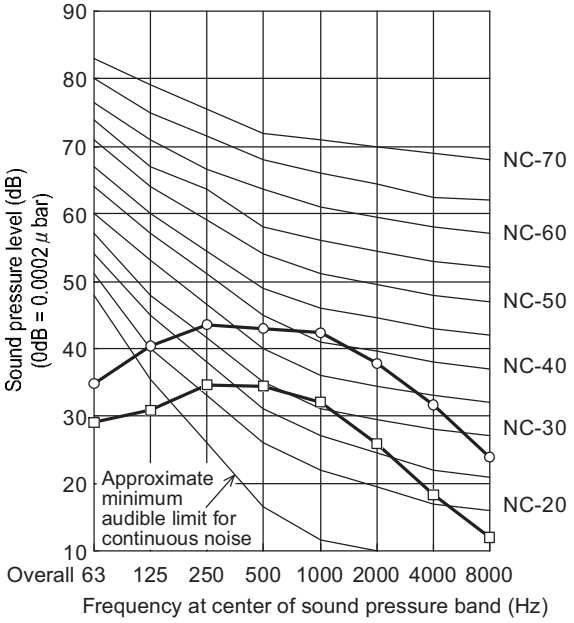

MODEL : S-140PT2E5A

SOUND LEVEL :	High	47 dB(A)
	Low	37 dB(A)
CONDITION	: 1 m from front of outlet at height of 1 m	
SOURCE	: 220-230-240V, 1 phase, 50Hz	

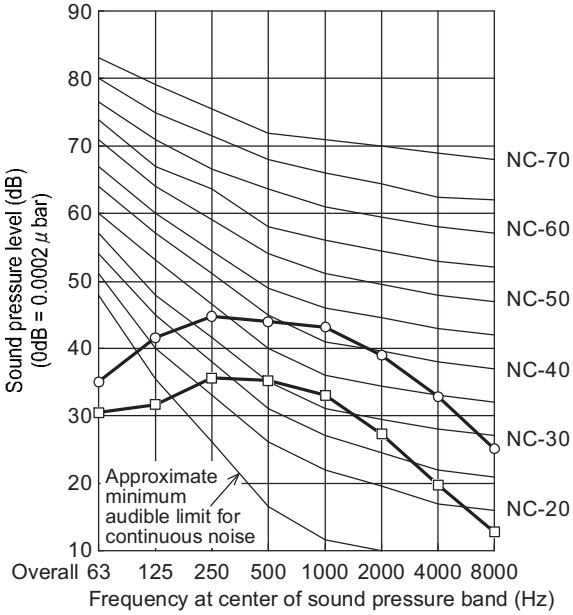

1-6. Noise Criterion Curves

(A) Indoor Units:

Wall Mounted Type

Strong
Weak

MODEL	: S-36PK1E5A	
SOUND LEVEL	: STRONG	35 dB(A)
	High	31 dB(A)
	Low	27 dB(A)
CONDITION	: 1m in front of air discharge and then 1m below	

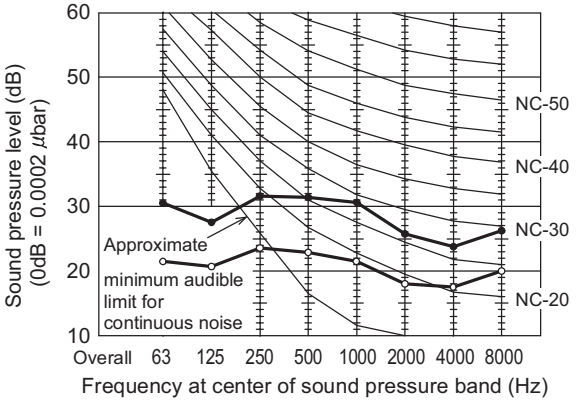

MODEL	: S-45PK1E5A	
SOUND LEVEL	: STRONG	38 dB(A)
	High	34 dB(A)
	Low	30 dB(A)
CONDITION	: 1m in front of air discharge and then 1m below	

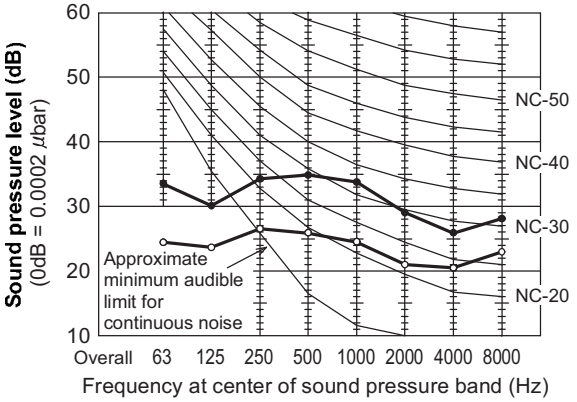

MODEL	: S-50PK1E5A	
SOUND LEVEL	: STRONG	40 dB(A)
	High	36 dB(A)
	Low	32 dB(A)
CONDITION	: 1m in front of air discharge and then 1m below	

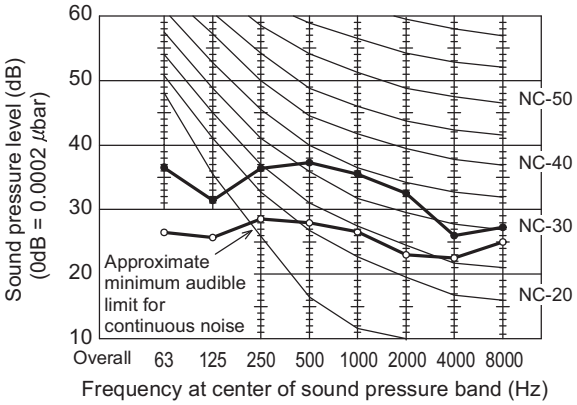

MODEL	: S-60PK1E5A, S-71PK1E5A	
SOUND LEVEL	: STRONG	47 dB(A)
	High	44 dB(A)
	Low	40 dB(A)
CONDITION	: 1m in front of air discharge and then 1m below	

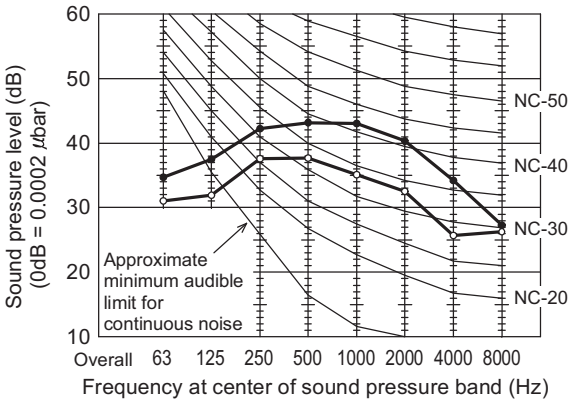

MODEL	: S-100PK1E5A	
SOUND LEVEL	: STRONG	49 dB(A)
	High	45 dB(A)
	Low	41 dB(A)
CONDITION	: 1m in front of air discharge and then 1m below	

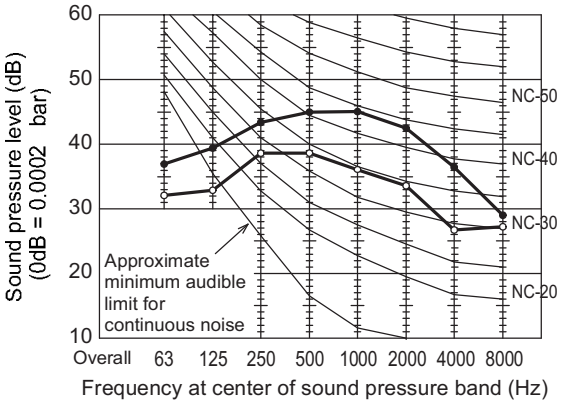

1-6. Noise Criterion Curves

(A) Indoor Units

Low Silhouette Ducted Type

High
Low

MODEL	: S-36PF1E5A
SOUND LEVEL	: High 33 dB(A)
	Low 25 dB(A)
CONDITION	: Under the unit 1.5m
SOURCE	: 220-230-240V, 1 phase, 50Hz

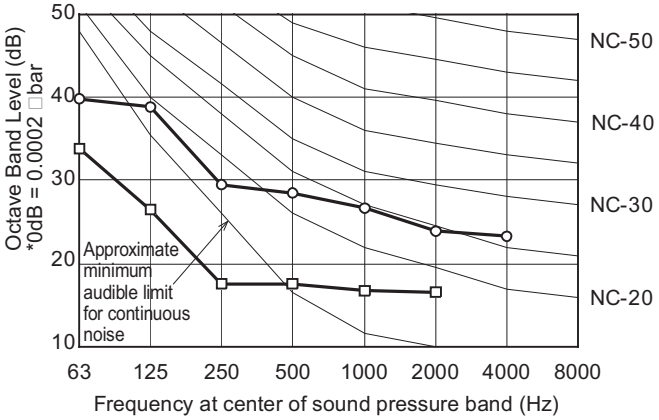

MODEL	: S-45PF1E5A
SOUND LEVEL	: High 33 dB(A)
	Low 25 dB(A)
CONDITION	: Under the unit 1.5m
SOURCE	: 220-230-240V, 1 phase, 50Hz

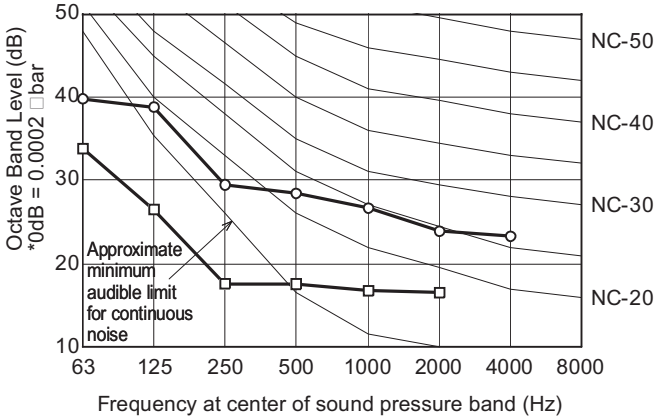

MODEL	: S-50PF1E5A
SOUND LEVEL	: High 34 dB(A)
	Low 26 dB(A)
CONDITION	: Under the unit 1.5m
SOURCE	: 220-230-240V, 1 phase, 50Hz

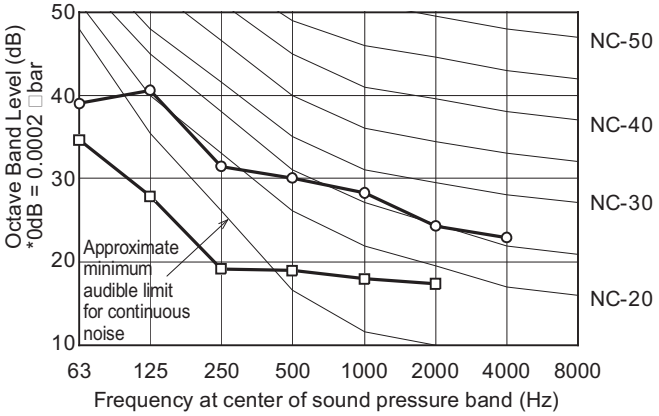

MODEL	: S-60PF1E5A
SOUND LEVEL	: High 35 dB(A)
	Low 26 dB(A)
CONDITION	: Under the unit 1.5m
SOURCE	: 220-230-240V, 1 phase, 50Hz

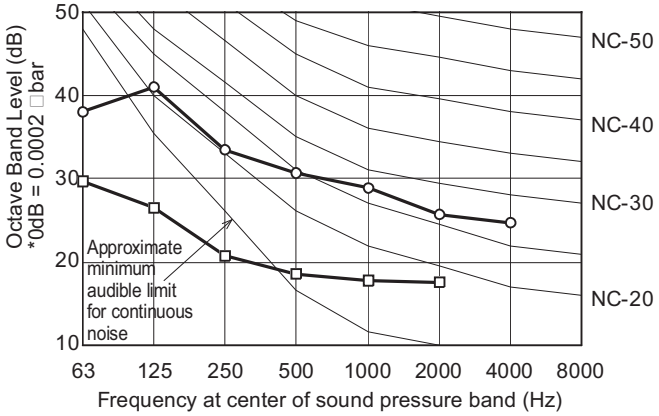

MODEL	: S-71PF1E5A
SOUND LEVEL	: High 35 dB(A)
	Low 26 dB(A)
CONDITION	: Under the unit 1.5m
SOURCE	: 220-230-240V, 1 phase, 50Hz

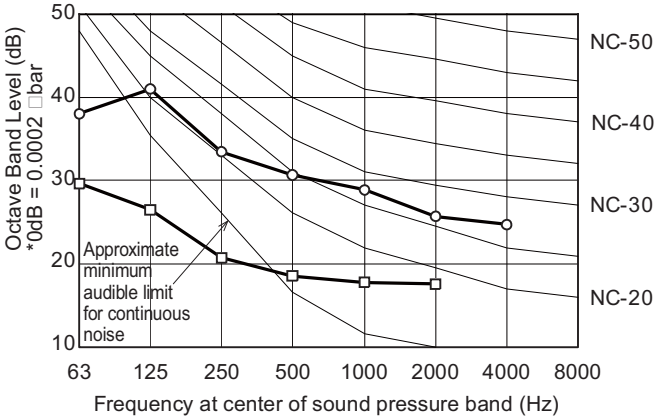

1-6. Noise Criterion Curves

(A) Indoor Units

Low Silhouette Ducted Type

High
Low

MODEL	: S-100PF1E5A	
SOUND LEVEL	: High	38 dB(A)
	Low	31 dB(A)
CONDITION	: Under the unit 1.5m	
SOURCE	: 220-230-240V, 1 phase, 50Hz	

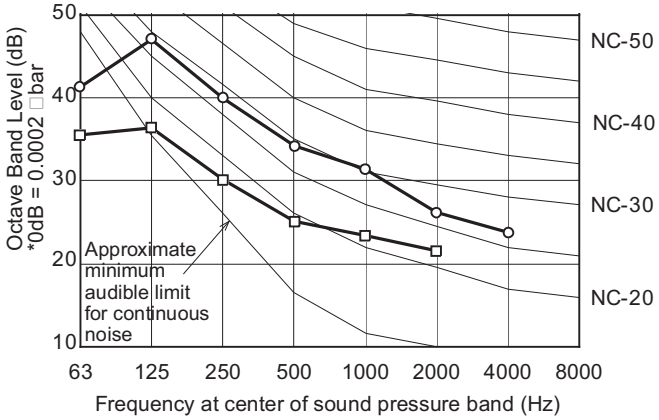

MODEL	: S-125PF1E5A	
SOUND LEVEL	: High	39 dB(A)
	Low	32 dB(A)
CONDITION	: Under the unit 1.5m	
SOURCE	: 220-230-240V, 1 phase, 50Hz	

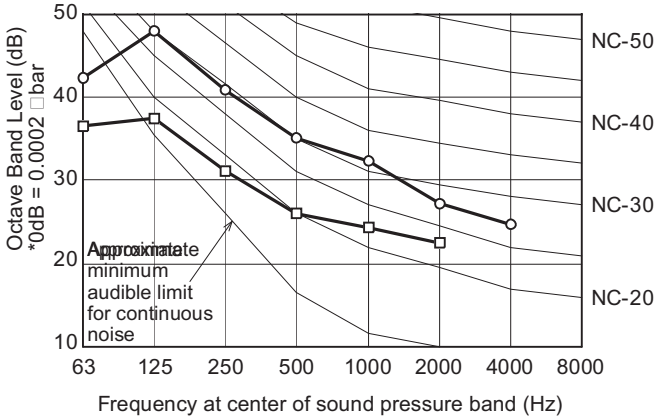

MODEL	: S-140PF1E5A	
SOUND LEVEL	: High	40 dB(A)
	Low	33 dB(A)
CONDITION	: Under the unit 1.5m	
SOURCE	: 220-230-240V, 1 phase, 50Hz	

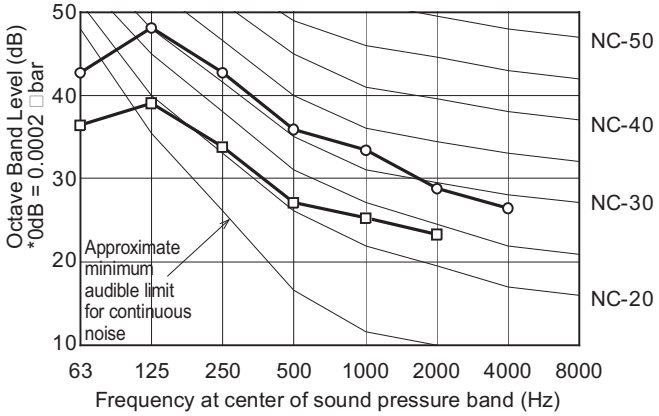

1-6. Noise Criterion Curves

(A) Indoor Units

Ducted Type

High
Low

MODEL : S-36PN1E5A

SOUND LEVEL	: HIGH	40 dB(A)
	LOW	35 dB(A)
CONDITION	: Under the unit 1.5m	
SOURCE	: 220-230-240V , Single Phase , 50Hz	

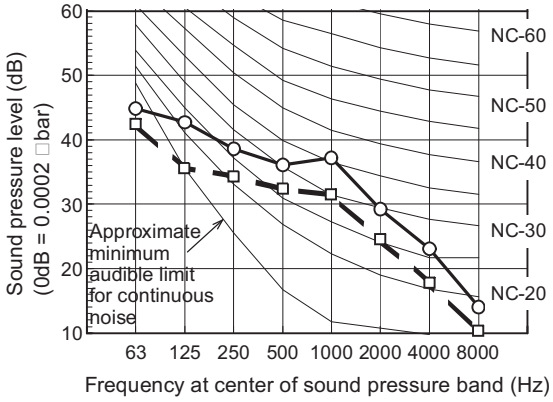

MODEL : S-45PN1E5A
S-50PN1E5A

SOUND LEVEL	: HIGH	41 dB(A)
	LOW	35 dB(A)
CONDITION	: Under the unit 1.5m	
SOURCE	: 220-230-240V , Single Phase , 50Hz	

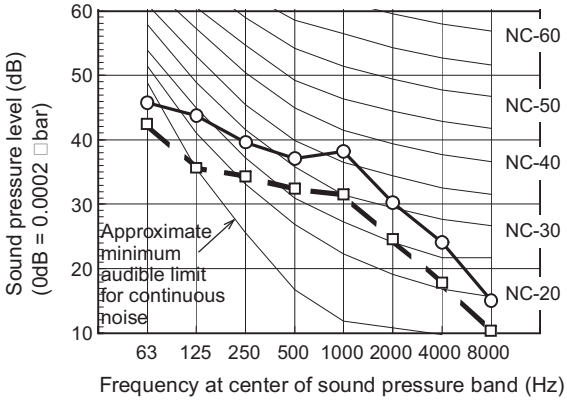

MODEL : S-60PN1E5A
S-71PN1E5A

SOUND LEVEL	: HIGH	43 dB(A)
	LOW	36 dB(A)
CONDITION	: Under the unit 1.5m	
SOURCE	: 220-230-240V , Single Phase , 50Hz	

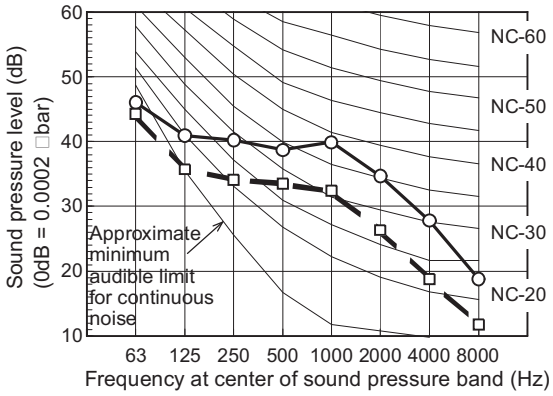

MODEL : S-100PN1E5A

SOUND LEVEL	: HIGH	44 dB(A)
	LOW	37 dB(A)
CONDITION	: Under the unit 1.5m	
SOURCE	: 220-230-240V , Single Phase , 50Hz	

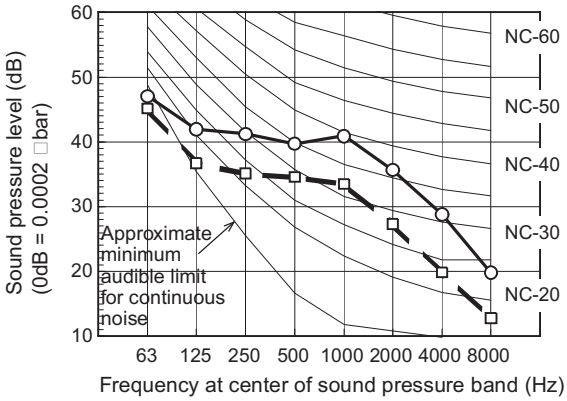

MODEL : S-125PN1E5A

SOUND LEVEL	: HIGH	45 dB(A)
	LOW	38 dB(A)
CONDITION	: Under the unit 1.5m	
SOURCE	: 220-230-240V , Single Phase , 50Hz	

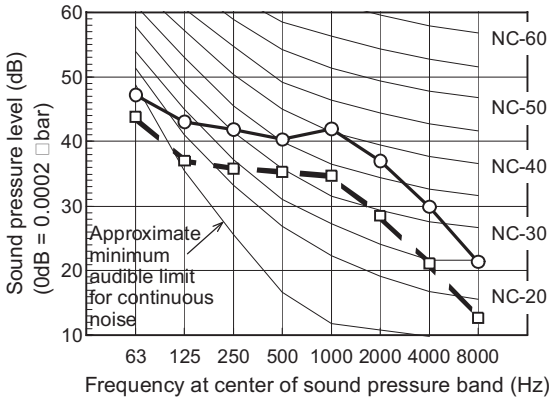

MODEL : S-140PN1E5A

SOUND LEVEL	: HIGH	46 dB(A)
	LOW	39 dB(A)
CONDITION	: Under the unit 1.5m	
SOURCE	: 220-230-240V , Single Phase , 50Hz	

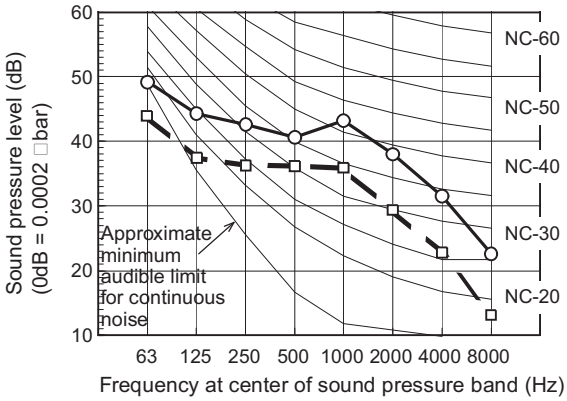

1-6. Noise Criterion Curves

(B) Outdoor Unit

MODEL	: U-50PE1E5
SOUND LEVEL	: Cooling 46 dB(A)
CONDITION	: 1 m in front at height of 1.5 m
SOURCE	: 220-230-240V, 1 phase, 50Hz

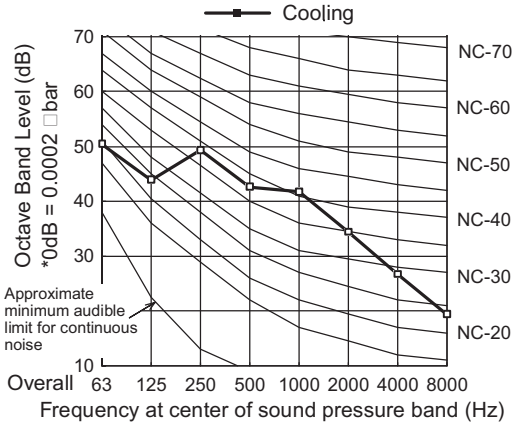

MODEL	: U-50PE1E5
SOUND LEVEL	: Heating 50 dB(A)
CONDITION	: 1 m in front at height of 1.5 m
SOURCE	: 220-230-240V, 1 phase, 50Hz

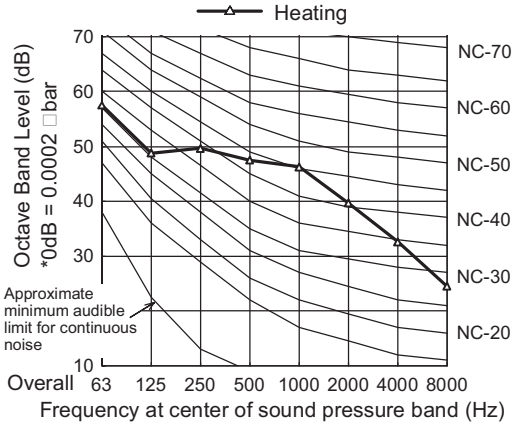

1-6. Noise Criterion Curves

(B) Outdoor Unit

MODEL	: U-60PE1E5A
SOUND LEVEL	: Cooling 48 dB(A)
CONDITION	: 1 m in front at height of 1.5 m
SOURCE	: 220-230-240V, 1 phase, 50Hz

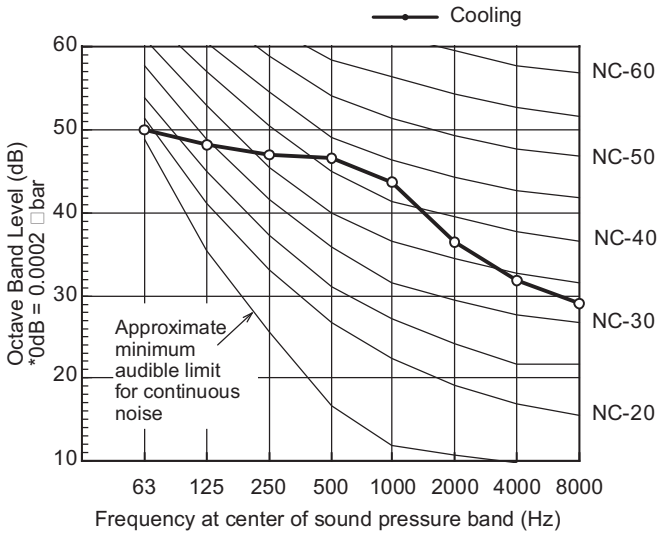

MODEL	: U-60PE1E5A
SOUND LEVEL	: Heating 50 dB(A)
CONDITION	: 1 m in front at height of 1.5 m
SOURCE	: 220-230-240V, 1 phase, 50Hz

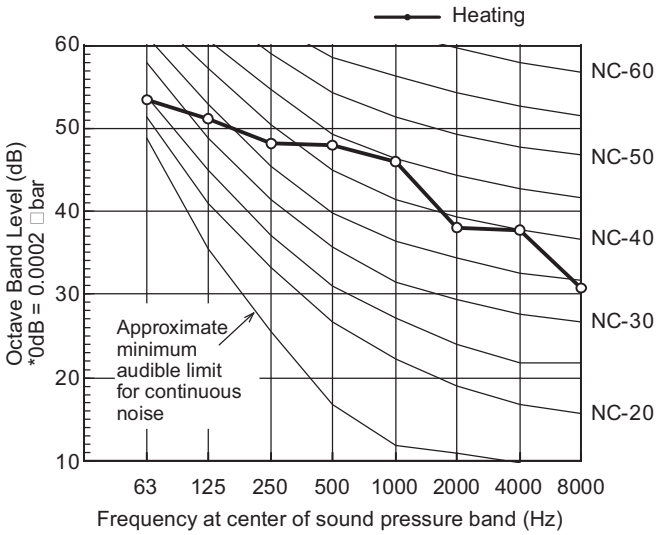

MODEL		: U-71PE1E5A, U-71PE1E8A
SOUND LEVEL		: Cooling 48 dB(A)
CONDITION		: 1 m in front at height of 1.5 m
SOURCE	1 phase model	: 220-230-240V, 1 phase, 50Hz
	3 phase model	: 380-400-415V, 3 phase, 50Hz

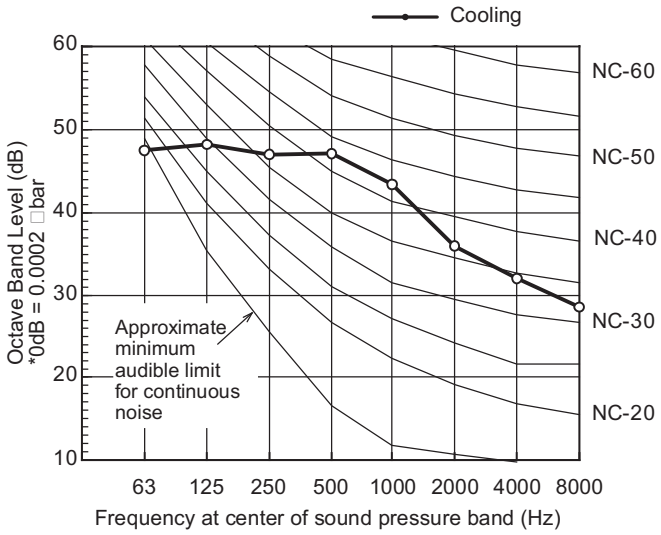

MODEL		: U-71PE1E5A, U-71PE1E8A
SOUND LEVEL		: Heating 50 dB(A)
CONDITION		: 1 m in front at height of 1.5 m
SOURCE	1 phase model	: 220-230-240V, 1 phase, 50Hz
	3 phase model	: 380-400-415V, 3 phase, 50Hz

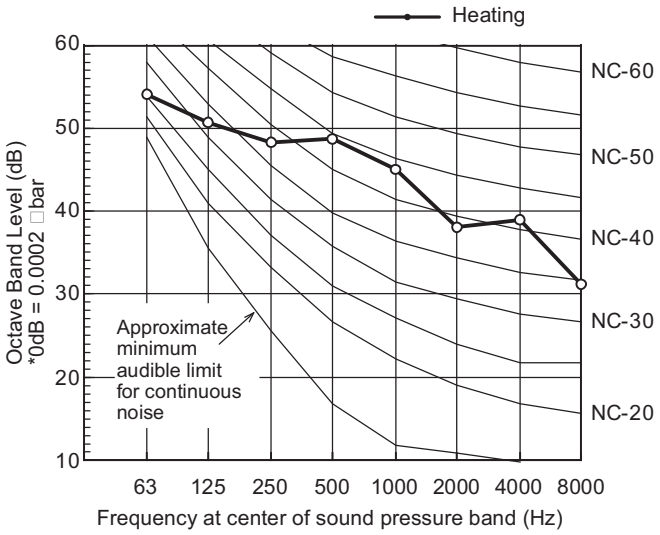

1-6. Noise Criterion Curves

(B) Outdoor Unit

MODEL	: U-100PE1E5A, U-100PE1E8A
SOUND LEVEL	: Cooling 52 dB(A)
CONDITION	: 1 m in front at height of 1.5 m
SOURCE	1 phase model : 220-230-240V, 1 phase, 50Hz
	3 phase model : 380-400-415V, 3 phase, 50Hz

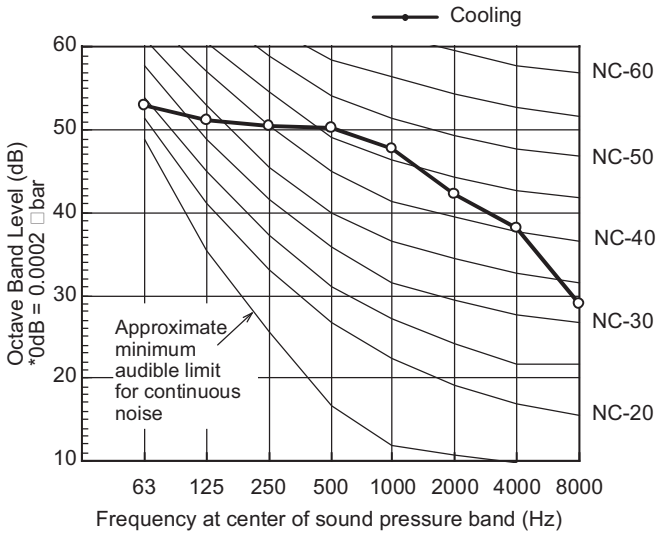

MODEL	: U-100PE1E5A, U-100PE1E8A
SOUND LEVEL	: Heating 52 dB(A)
CONDITION	: 1 m in front at height of 1.5 m
SOURCE	1 phase model : 220-230-240V, 1 phase, 50Hz
	3 phase model : 380-400-415V, 3 phase, 50Hz

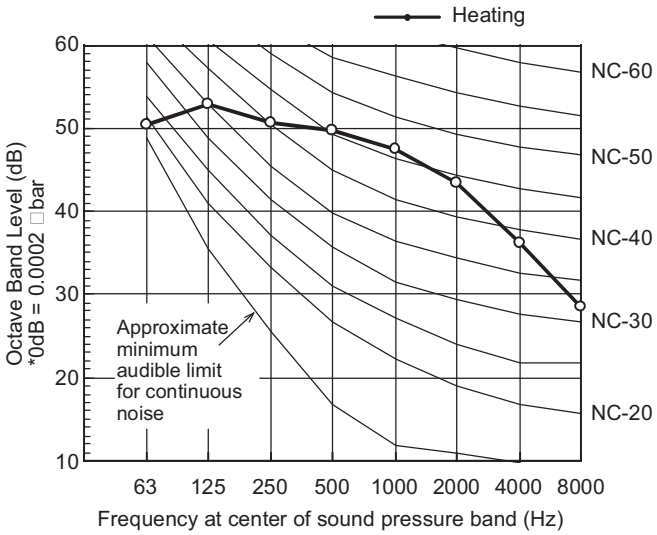

MODEL	: U-125PE1E5A,U-125PE1E8A
SOUND LEVEL	: Cooling 53 dB(A)
CONDITION	: 1 m in front at height of 1.5 m
SOURCE	1 phase model : 220-230-240V, 1 phase, 50Hz
	3 phase model : 380-400-415V, 3 phase, 50Hz

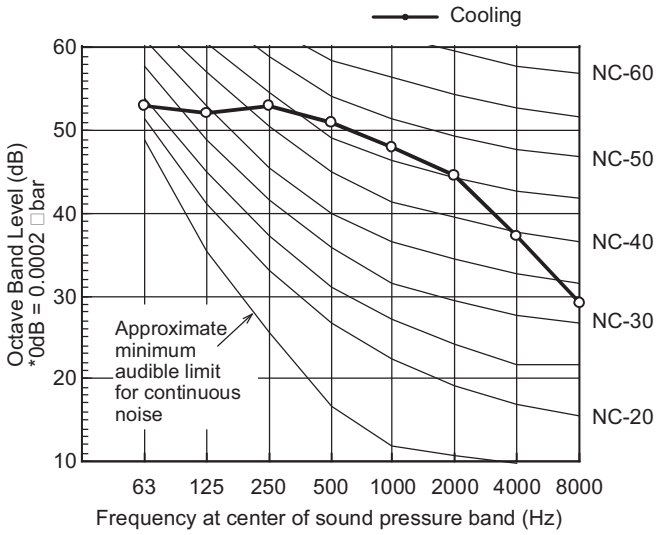

MODEL	: U-125PE1E5A, U-125PE1E8A
SOUND LEVEL	: Heating 53 dB(A)
CONDITION	: 1 m in front at height of 1.5 m
SOURCE	1 phase model : 220-230-240V, 1 phase, 50Hz
	3 phase model : 380-400-415V, 3 phase, 50Hz

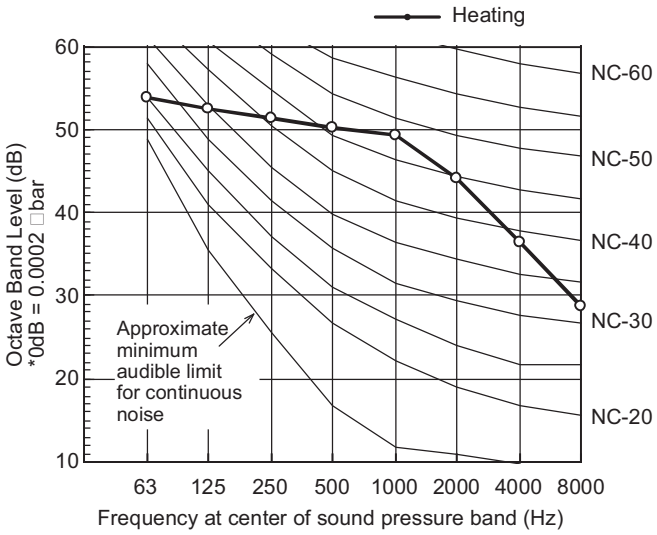

1-6. Noise Criterion Curves

(B) Outdoor Unit

MODEL	: U-140PE1E5A, U-140PE1E8A
SOUND LEVEL	: Cooling 54 dB(A)
CONDITION	: 1 m in front at height of 1.5 m
SOURCE 1 phase model	: 220-230-240V, 1 phase, 50Hz
3 phase model	: 380-400-415V, 3 phase, 50Hz

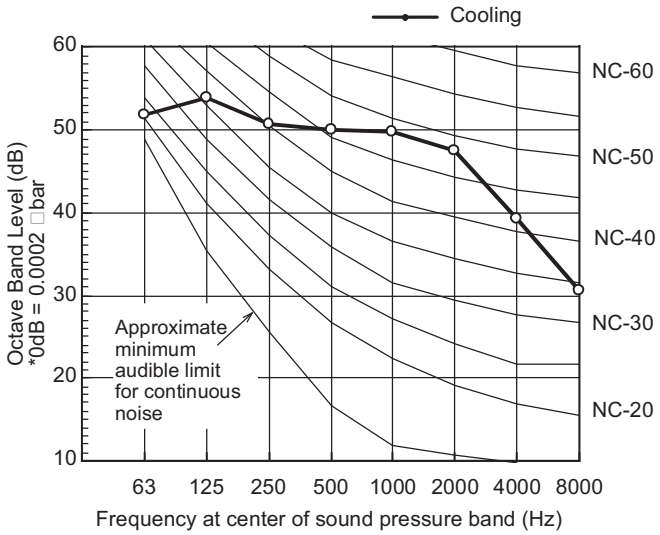

MODEL	: U-140PE1E5A, U-140PE1E8A
SOUND LEVEL	: Heating 55 dB(A)
CONDITION	: 1 m in front at height of 1.5 m
SOURCE 1 phase model	: 220-230-240V, 1 phase, 50Hz
3 phase model	: 380-400-415V, 3 phase, 50Hz

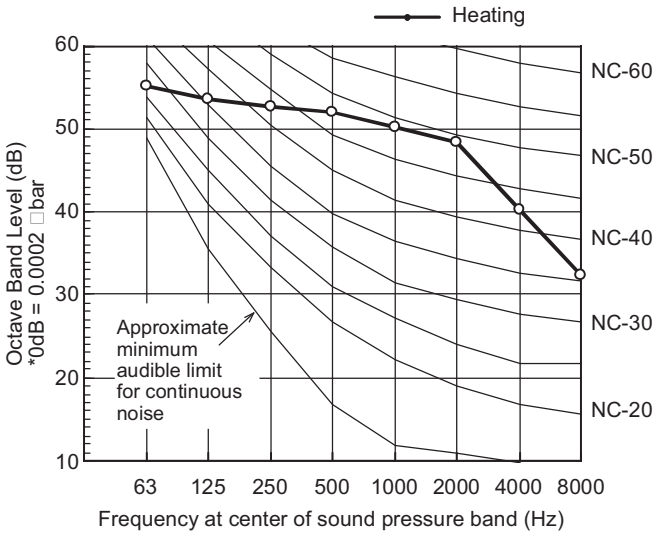

1-6. Noise Criterion Curves

(B) Outdoor Unit

MODEL	: U-60PEY1E5
SOUND LEVEL	: Cooling 46 dB(A)
CONDITION	: 1 m in front at height of 1.5 m
SOURCE	: 220-230-240V, 1 phase, 50Hz

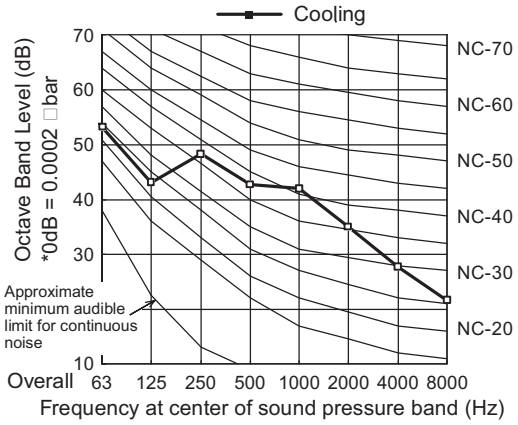

MODEL	: U-60PEY1E5
SOUND LEVEL	: Heating 50 dB(A)
CONDITION	: 1 m in front at height of 1.5 m
SOURCE	: 220-230-240V, 1 phase, 50Hz

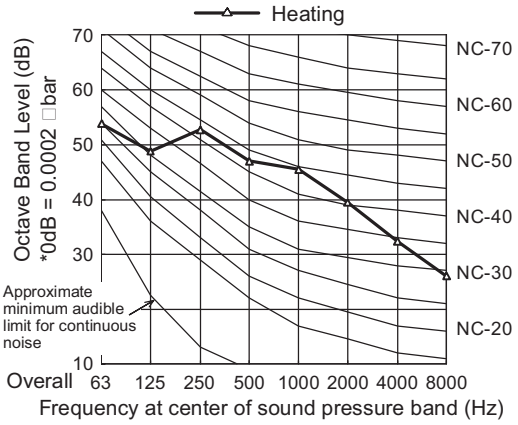

MODEL	: U-71PEY1E5
SOUND LEVEL	: Cooling 50 dB(A)
CONDITION	: 1 m in front at height of 1.5 m
SOURCE	: 220-230-240V, 1 phase, 50Hz

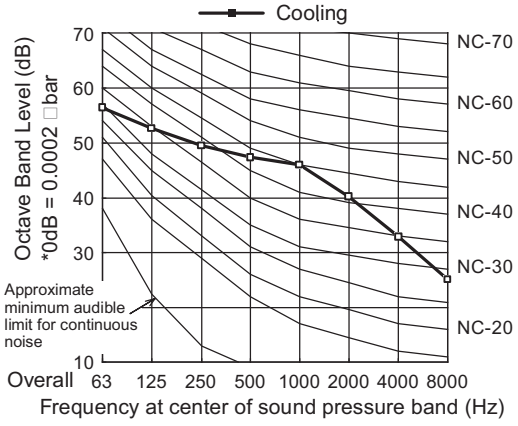

MODEL	: U-71PEY1E5
SOUND LEVEL	: Heating 52 dB(A)
CONDITION	: 1 m in front at height of 1.5 m
SOURCE	: 220-230-240V, 1 phase, 50Hz

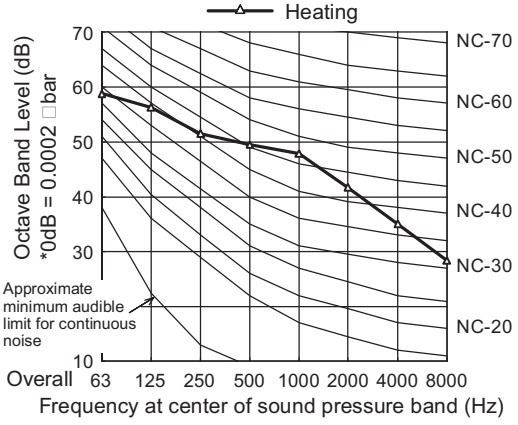

1-6. Noise Criterion Curves

(B) Outdoor Unit

MODEL	: U-100PEY1E5, U-100PEY1E8
SOUND LEVEL	: Cooling 54 dB(A)
CONDITION	: 1 m in front at height of 1.5 m
SOURCE	1 phase model : 220-230-240V, 1 phase, 50Hz
	3 phase model : 380-400-415V, 3 phase, 50Hz

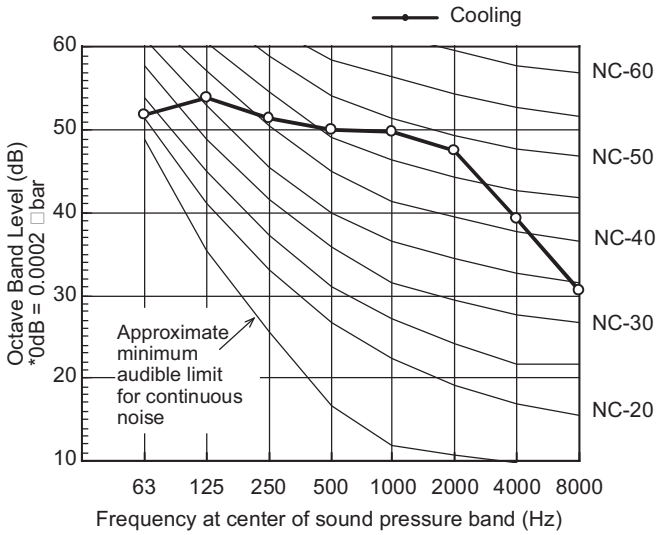

MODEL	: U-100PEY1E5, U-100PEY1E8
SOUND LEVEL	: Heating 54 dB(A)
CONDITION	: 1 m in front at height of 1.5 m
SOURCE	1 phase model : 220-230-240V, 1 phase, 50Hz
	3 phase model : 380-400-415V, 3 phase, 50Hz

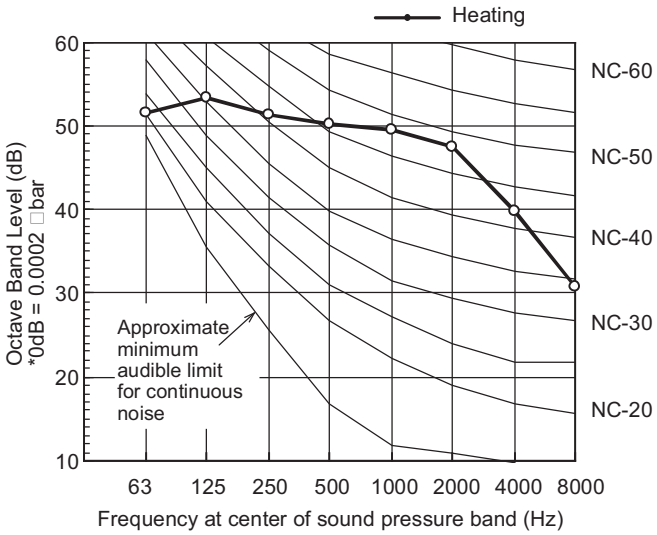

MODEL	: U-125PEY1E5, U-125PEY1E8
SOUND LEVEL	: Cooling 56 dB(A)
CONDITION	: 1 m in front at height of 1.5 m
SOURCE	1 phase model : 220-230-240V, 1 phase, 50Hz
	3 phase model : 380-400-415V, 3 phase, 50Hz

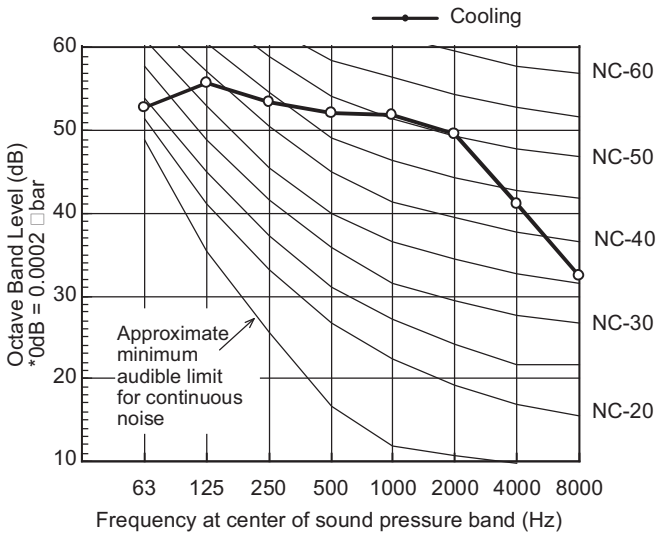

MODEL	: U-125PEY1E5, U-125PEY1E8
SOUND LEVEL	: Heating 56 dB(A)
CONDITION	: 1 m in front at height of 1.5 m
SOURCE	1 phase model : 220-230-240V, 1 phase, 50Hz
	3 phase model : 380-400-415V, 3 phase, 50Hz

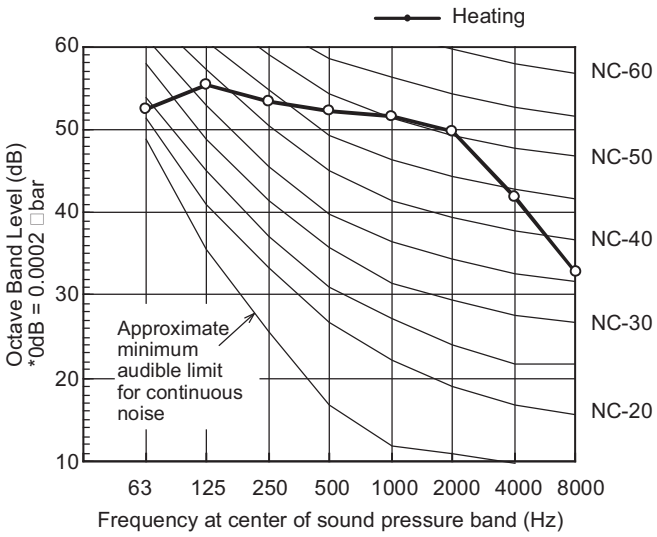

1-6. Noise Criterion Curves

(B) Outdoor Unit

MODEL	: U-140PEY1E8
SOUND LEVEL	: Cooling 54 dB(A)
CONDITION	: 1 m in front at height of 1.5 m
SOURCE	: 380-400-415V, 3 phase, 50Hz

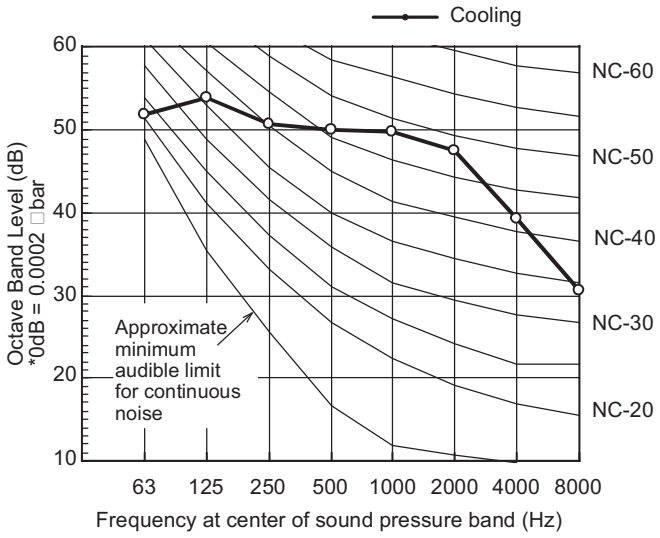

MODEL	: U-140PEY1E8
SOUND LEVEL	: Heating 53 dB(A)
CONDITION	: 1 m in front at height of 1.5 m
SOURCE	: 380-400-415V, 3 phase, 50Hz

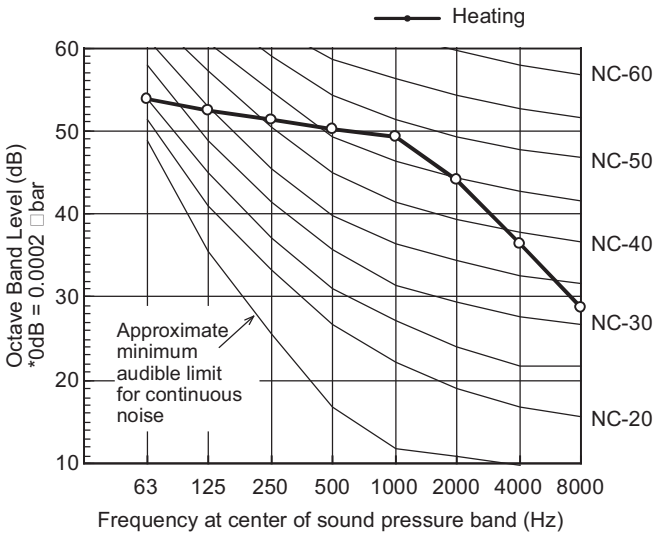

1-7. Indoor Fan Performance

External Static Pressure Setting for AC Fan Motor Model
To apply to following models
■S-36PN1E5A , S-45PN1E5A , S-50PN1E5A
There are two tap connector located in indoor unit control box can be selected.
The "blue connector" is standard tap ,use-as-is at shipment.
For high static pressure duct ,switch Fan Motor connector to plug in boost tap
"white connector" to elevate air volume.

S-36PN1E5A P-Q CURVE

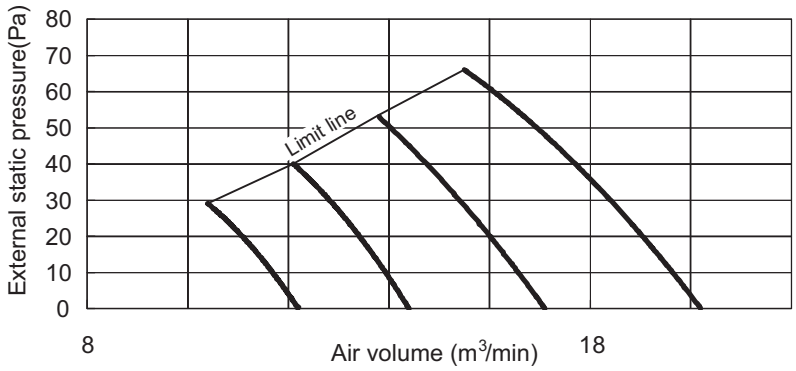

S-45PN1E5A, S-50PN1E5A P-Q CURVE

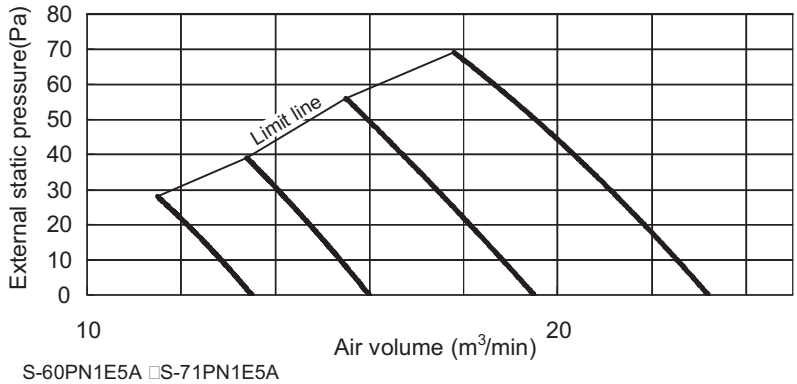

S-60PN1E5A □S-71PN1E5A

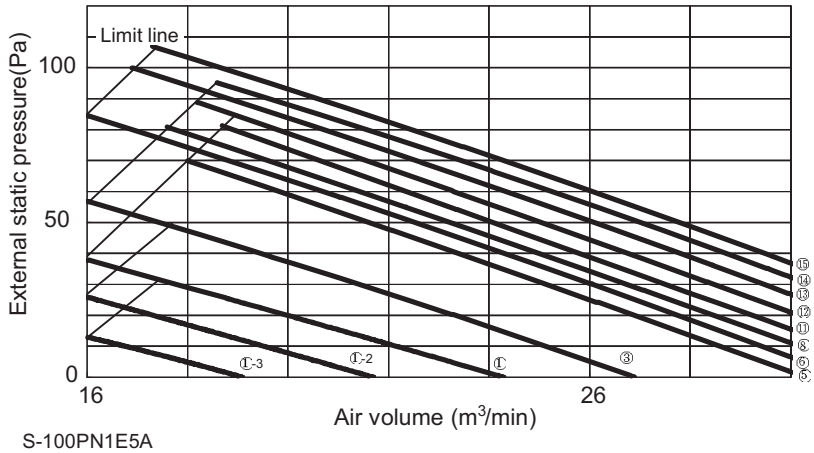

S-100PN1E5A

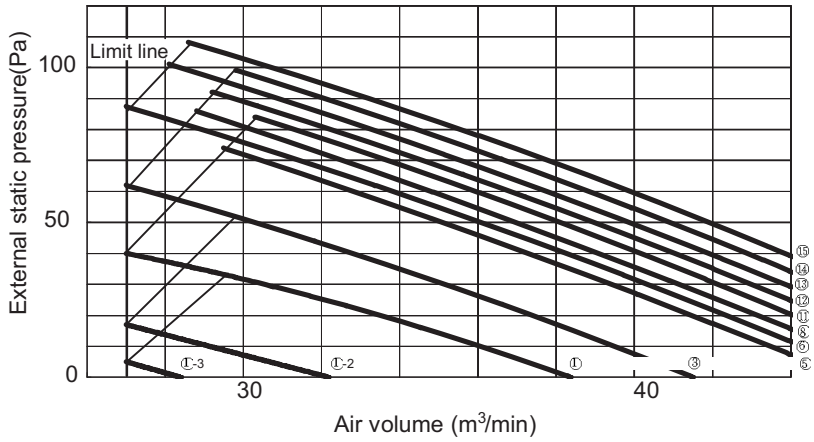

1-8. Airflow Distance Chart

4-Way Cassette (U1 type)

S-36PU1E5A/45PU1E5A/50PU1E5A

Heating : Distribution of wind velocity

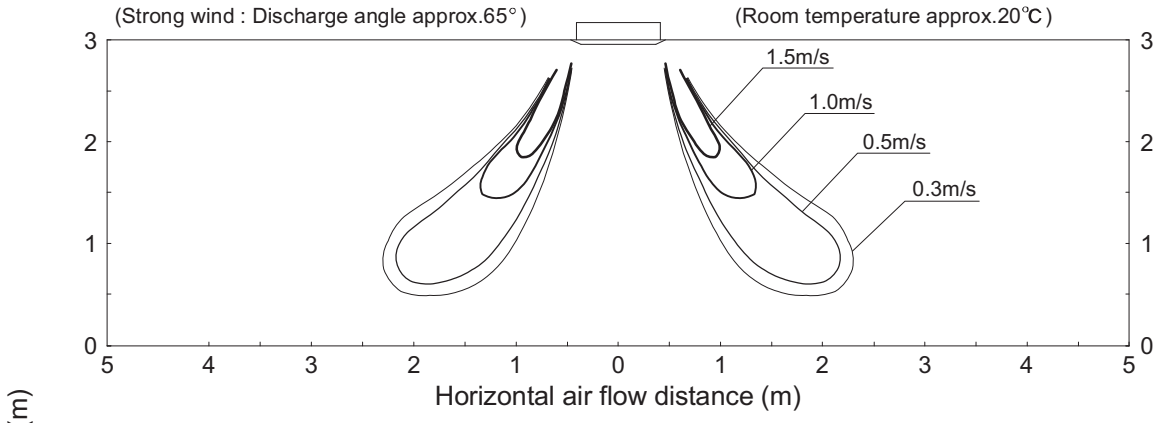

Heating : Distribution of temperature

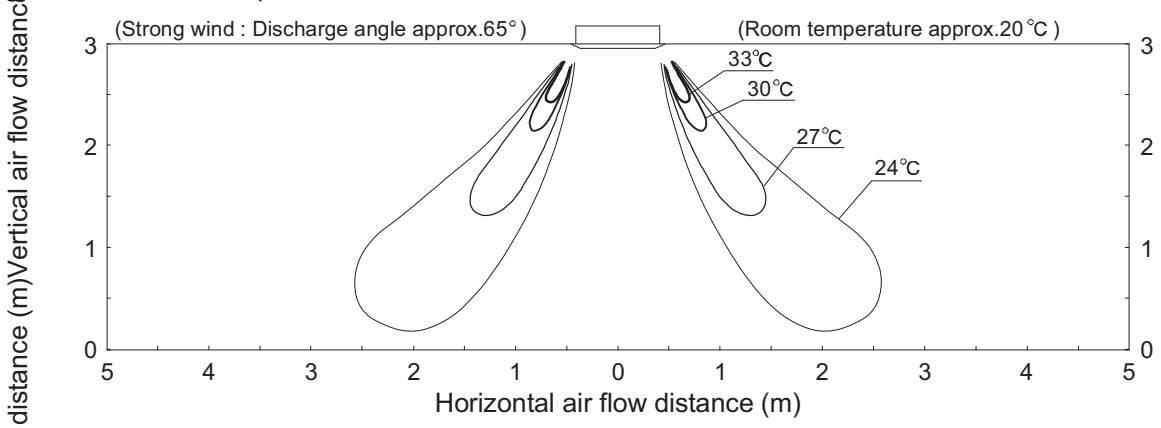

Cooling : Distribution of wind velocity

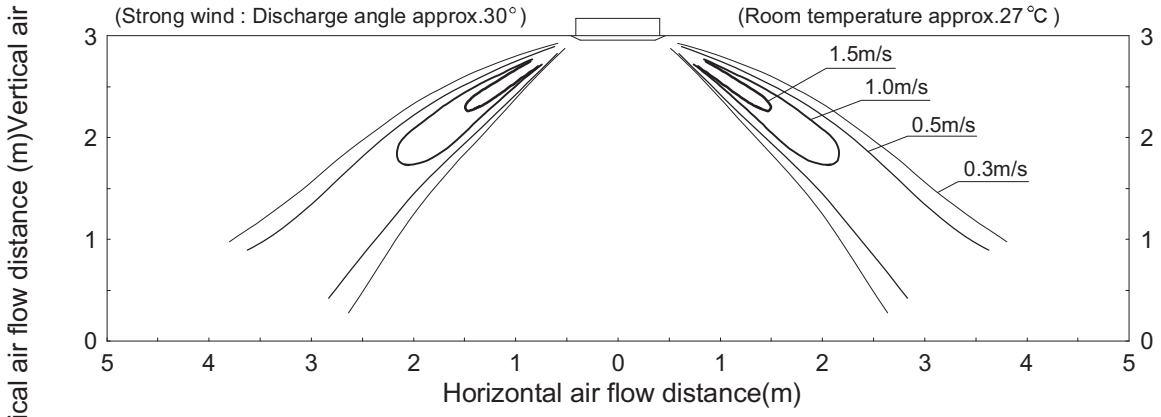

Cooling : Distribution of temperature

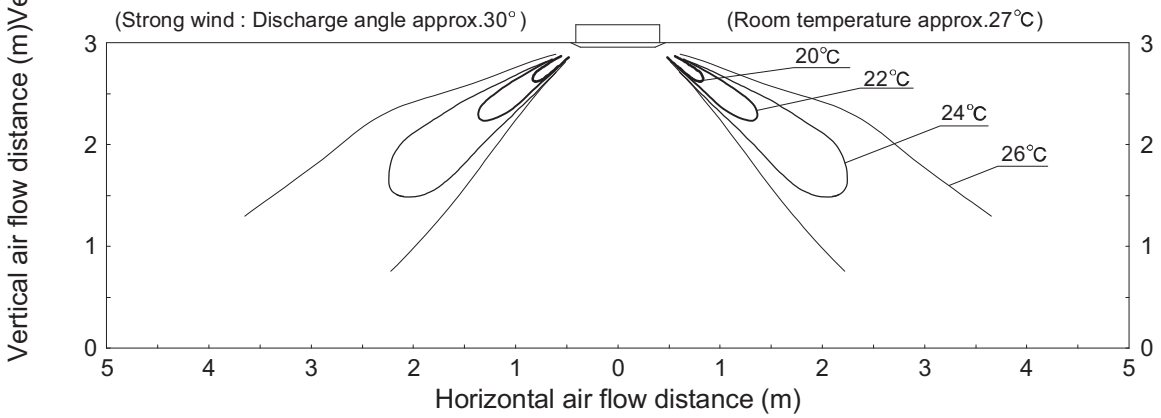

Vertical air flow distance (m)

4-Way Cassette (U1 type)

S-60PU1E5A / 71PU1E5A

Heating : Distribution of wind velocity

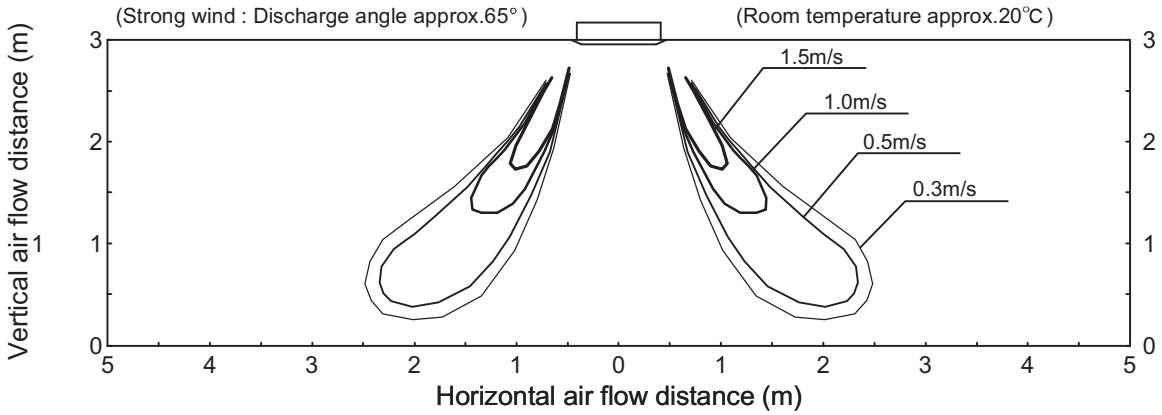

Heating : Distribution of temperature

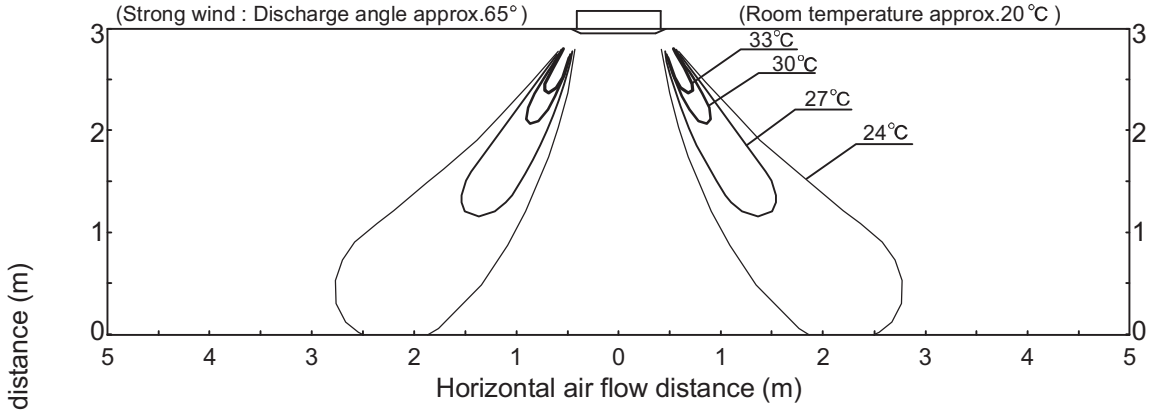

Cooling : Distribution of wind velocity

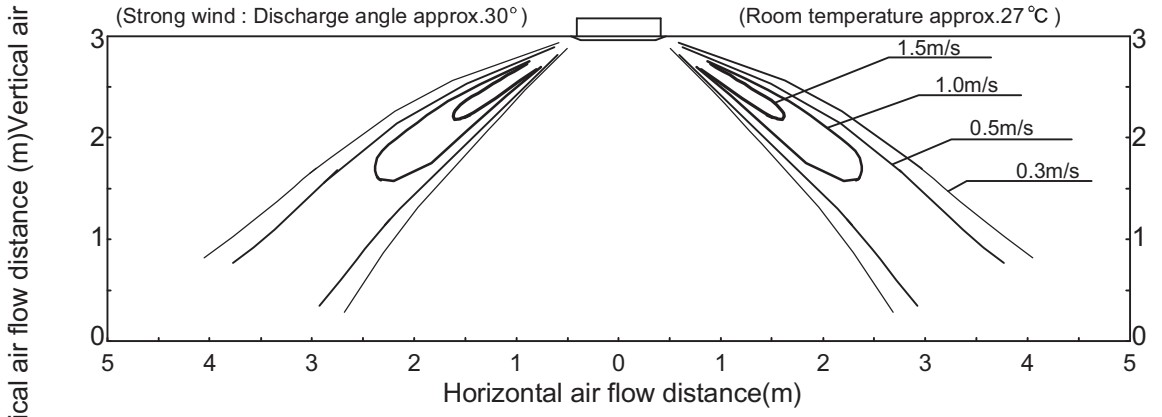

Cooling : Distribution of temperature

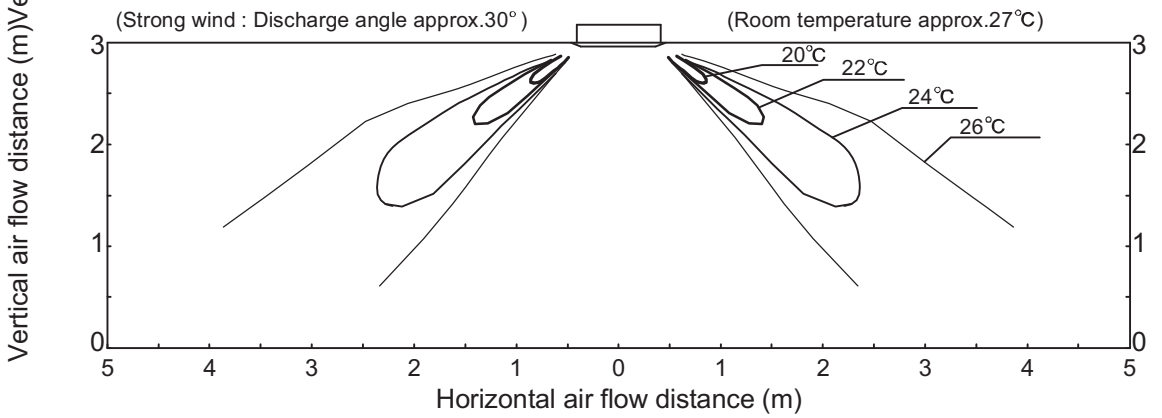

4-Way Cassette (U1 type)

S-100PU1E5A / 125PU1E5A / 140PU1E5A

Heating : Distribution of wind velocity

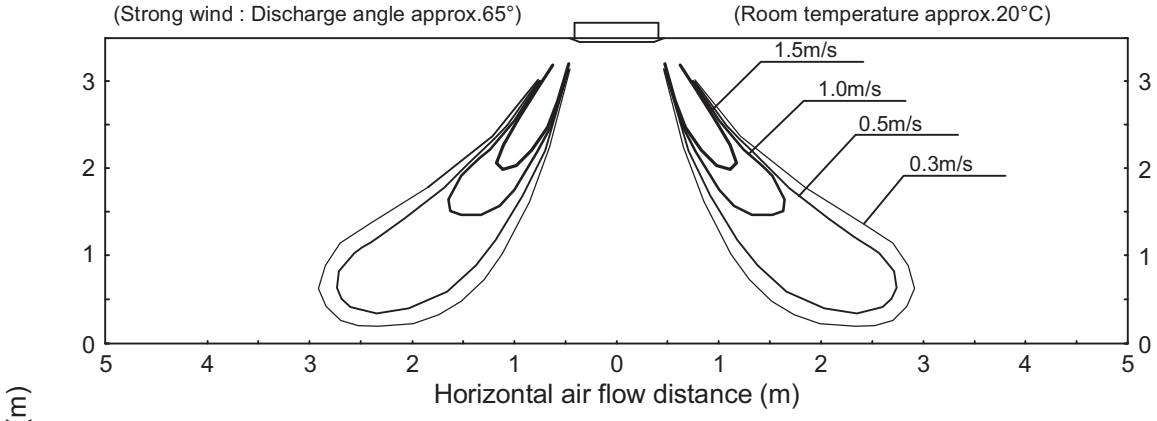

Heating : Distribution of temperature

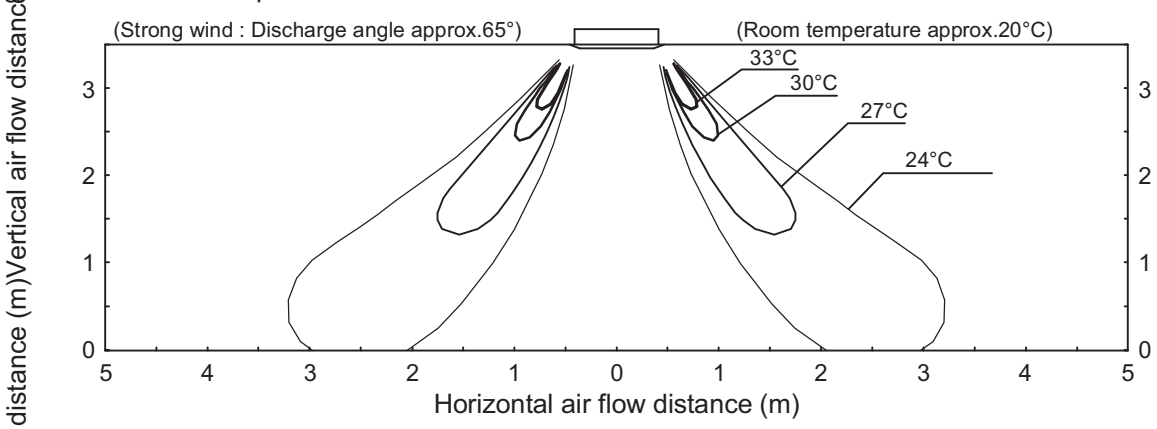

Cooling : Distribution of wind velocity

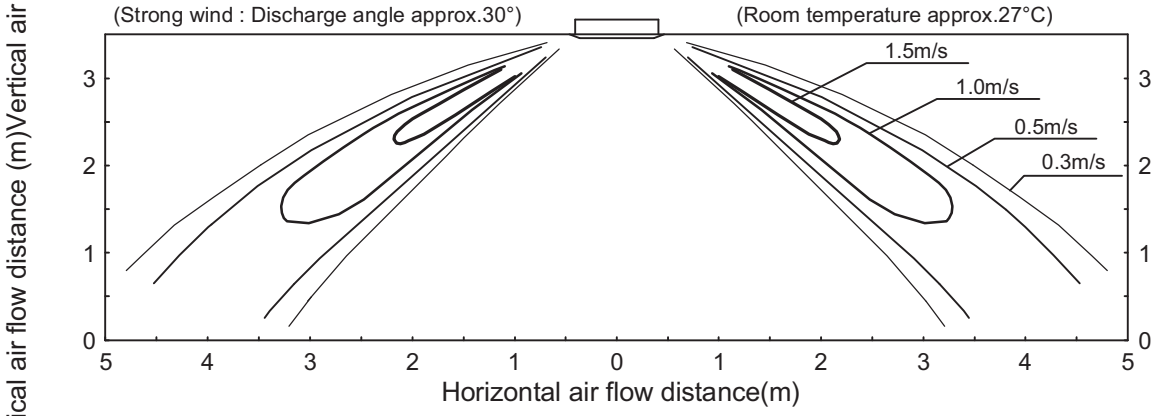

Cooling : Distribution of temperature

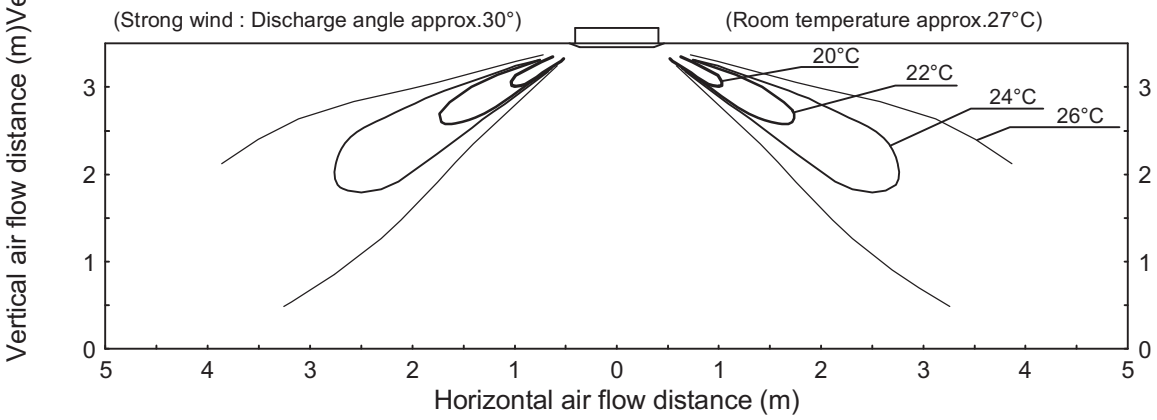

Vertical air flow distance (m)

Ceiling (T2 Type)

S-36PT2E5A / 45PT2E5A / 50PT2E5A

Heating : Distribution of wind velocity

(Strong wind : Discharge angle approx.54°) (Room temperature approx.20°C)

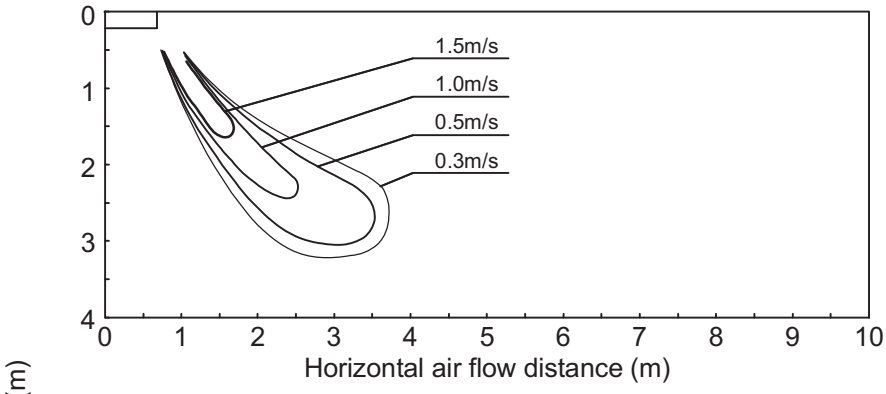

Heating : Distribution of temperature

(Strong wind : Discharge angle approx.54°) (Room temperature approx.20°C)

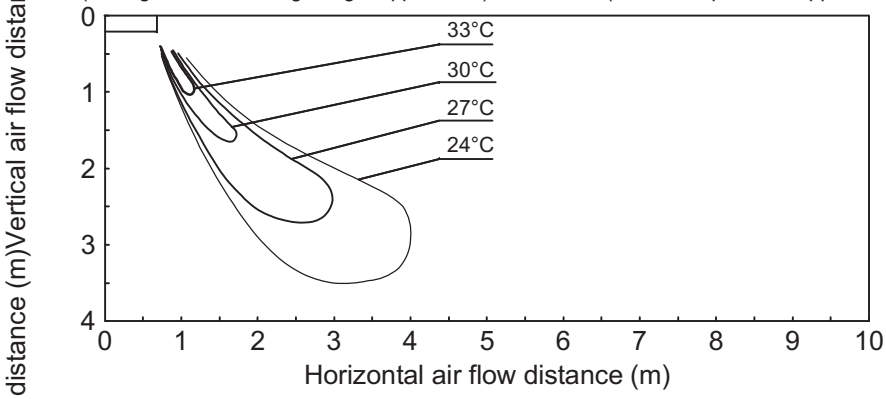

Cooling : Distribution of wind velocity

(Strong wind : Discharge angle approx. -7°) (Room temperature approx.27°C)

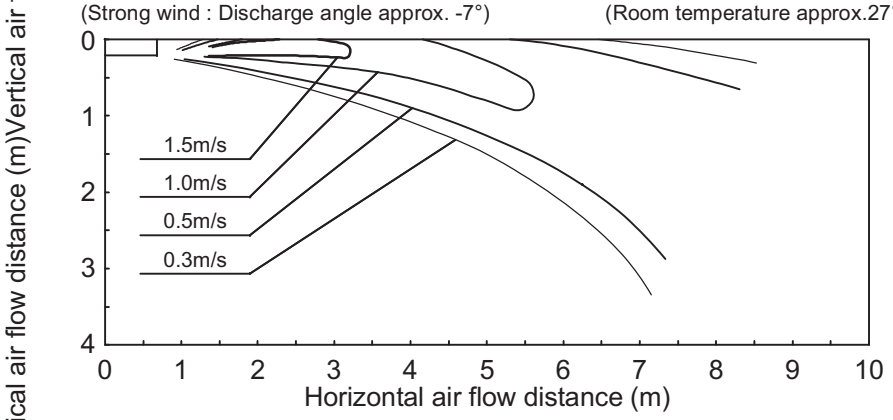

Cooling : Distribution of temperature

(Strong wind : Discharge angle approx. -7°) (Room temperature approx.27°C)

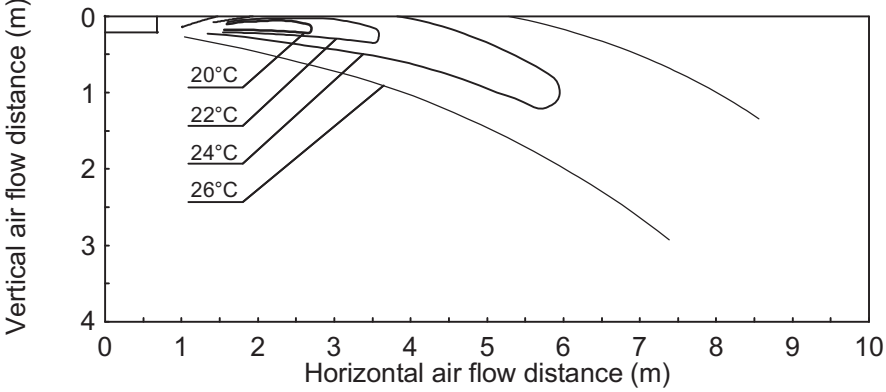

Vertical air flow distance (m)

Ceiling (T2 Type)

S-60PT2E5A / 71PT2E5A

Heating : Distribution of wind velocity

(Strong wind : Discharge angle approx.54°) (Room temperature approx.20°C)

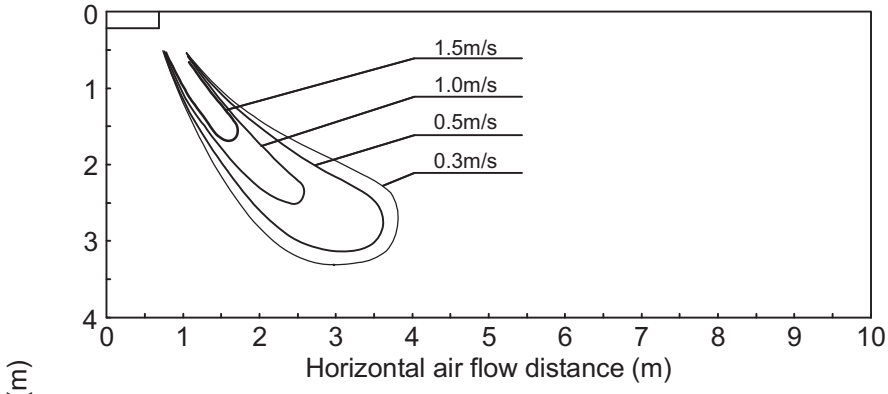

Heating : Distribution of temperature

(Strong wind : Discharge angle approx.54°) (Room temperature approx.20°C)

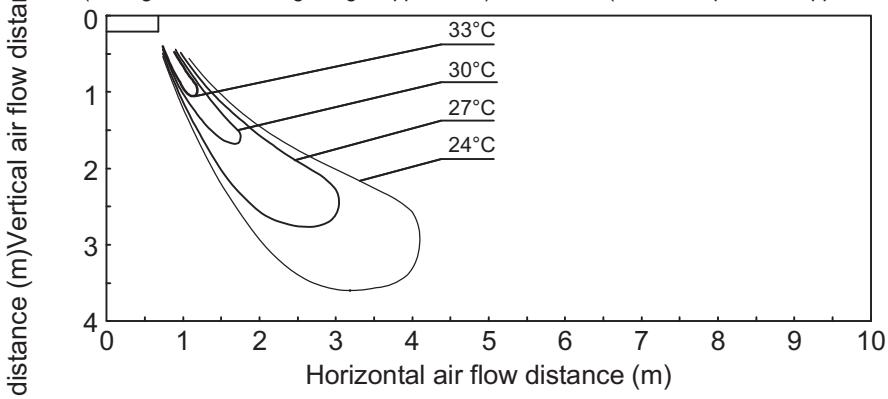

Cooling : Distribution of wind velocity

(Strong wind : Discharge angle approx. -7°) (Room temperature approx.27°C)

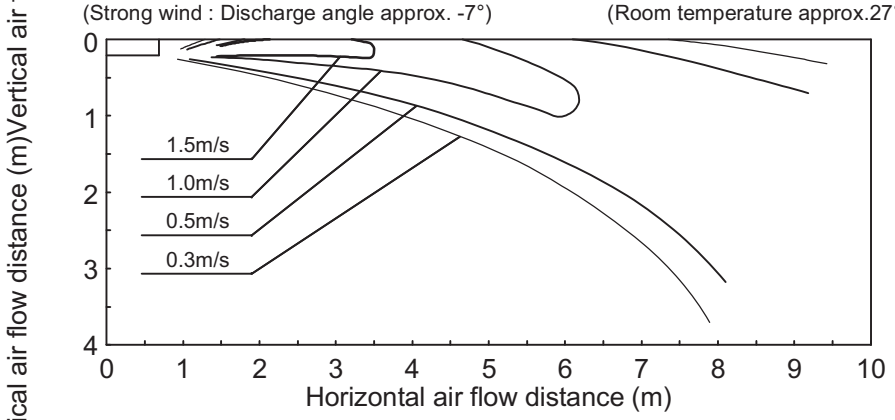

Cooling : Distribution of temperature

(Strong wind : Discharge angle approx. -7°) (Room temperature approx.27°C)

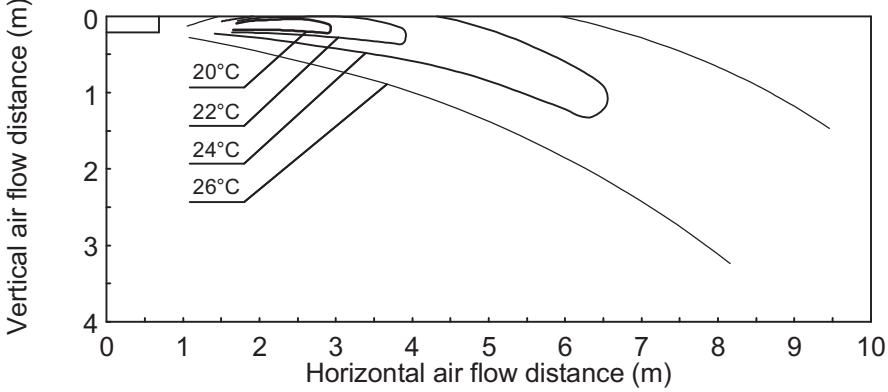

Ceiling (T2 Type)

S-100PT2E5A / 125PT2E5A / 140PT2E5A

Heating : Distribution of wind velocity

(Strong wind : Discharge angle approx.54°) (Room temperature approx.20°C)

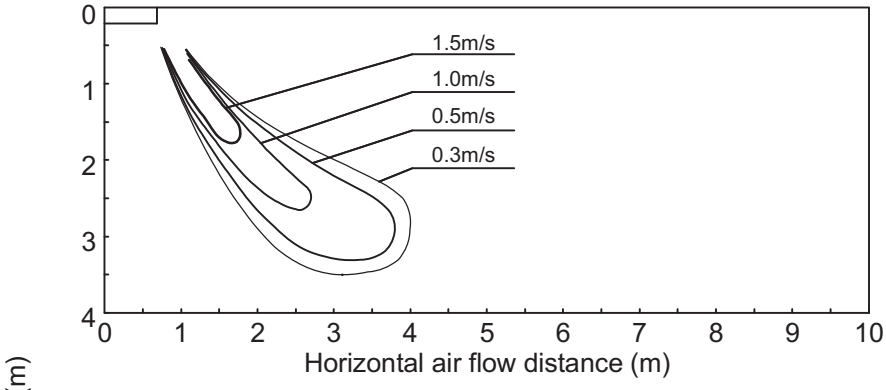

Heating : Distribution of temperature

(Strong wind : Discharge angle approx.54°) (Room temperature approx.20°C)

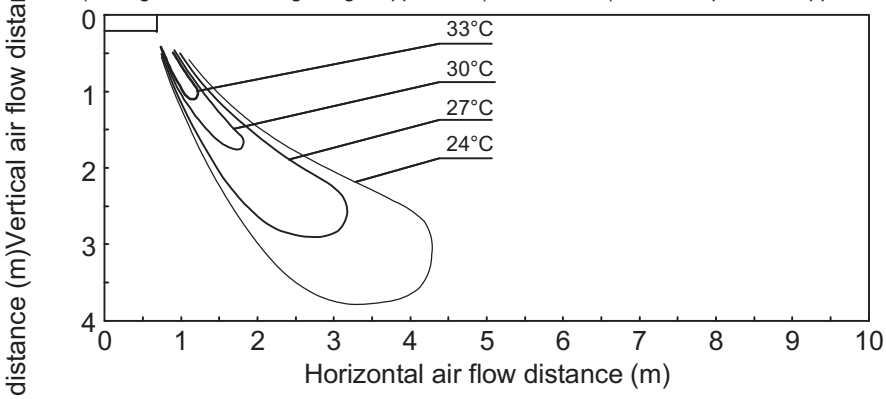

Cooling : Distribution of wind velocity

(Strong wind : Discharge angle approx. -7°) (Room temperature approx.27°C)

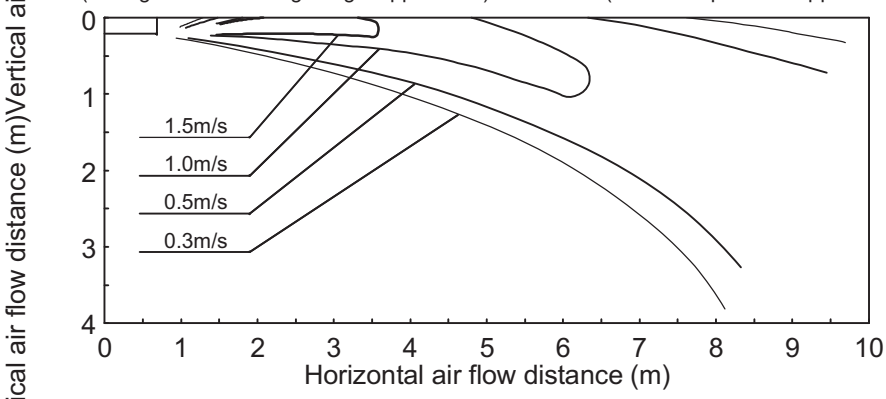

Cooling : Distribution of temperature

(Strong wind : Discharge angle approx. -7°) (Room temperature approx.27°C)

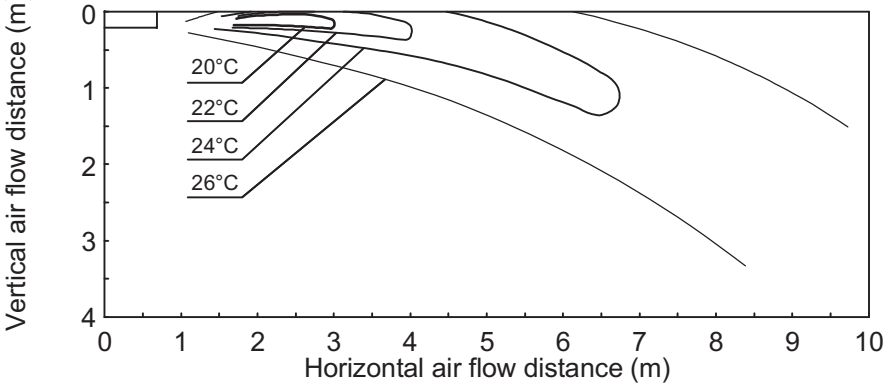

Wall Mounted (K1 type)

S-36PK1E5A

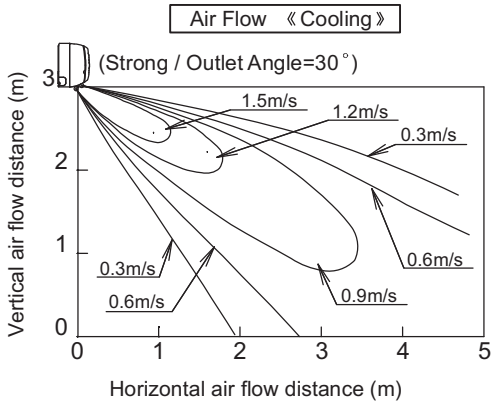

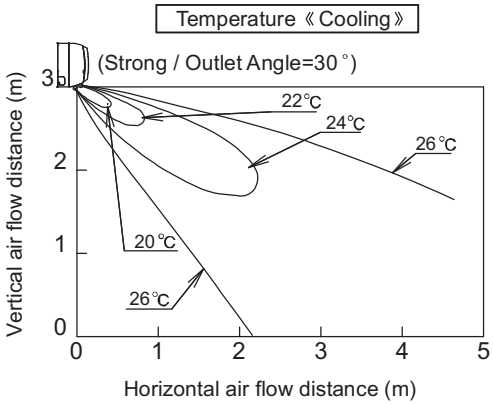

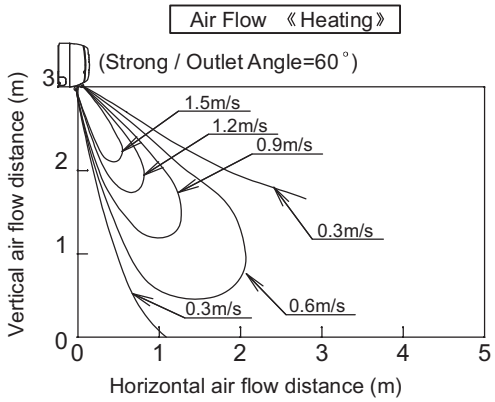

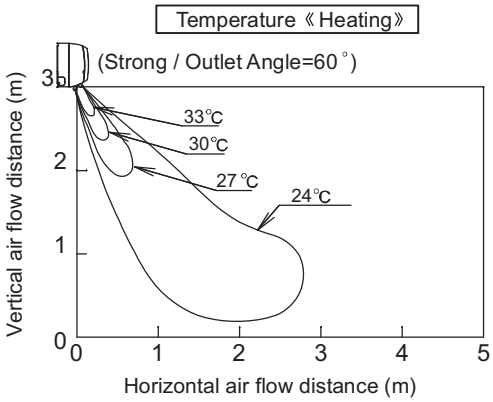

Wall Mounted (K1 type)

S-45PK1E5A

Heating : Distribution of wind velocity

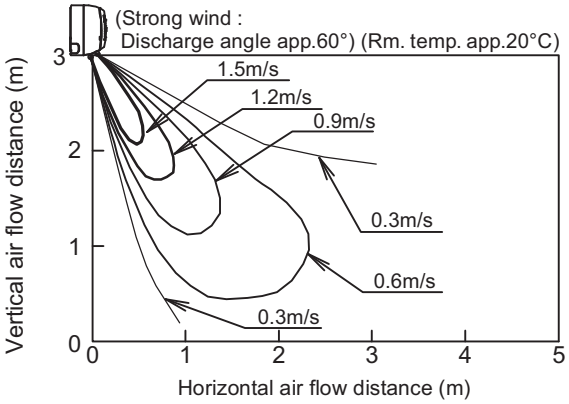

Heating : Distribution of temperature

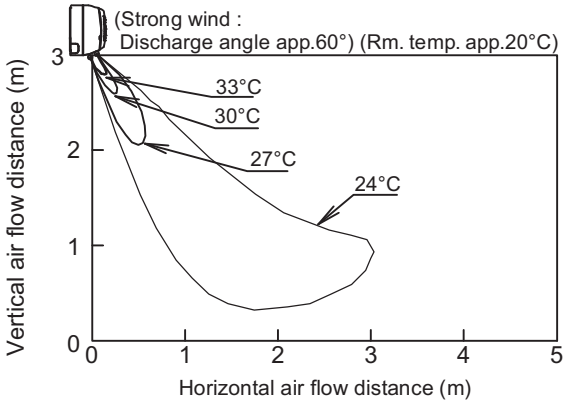

Cooling : Distribution of wind velocity

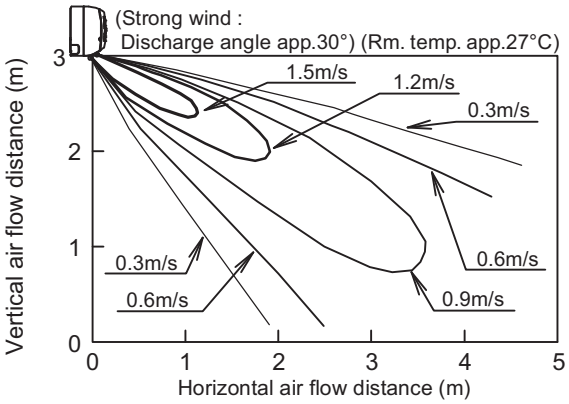

Cooling : Distribution of temperature

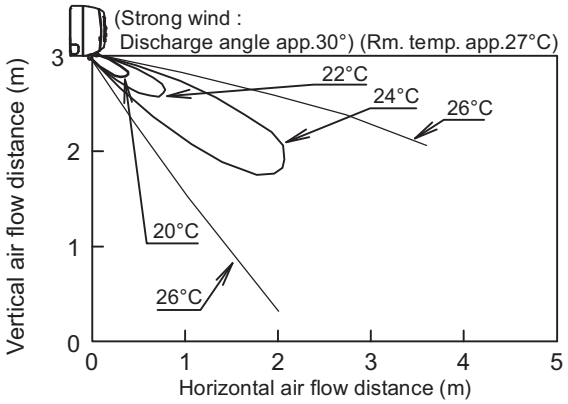

S-50PK1E5A

Heating : Distribution of wind velocity

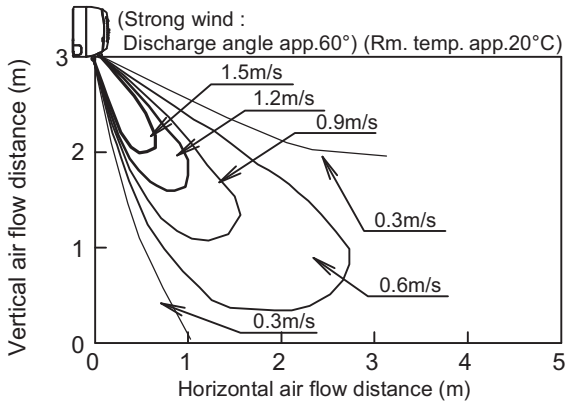

Heating : Distribution of temperature

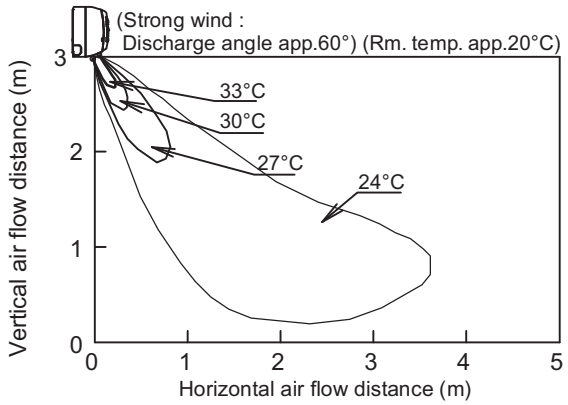

Cooling : Distribution of wind velocity

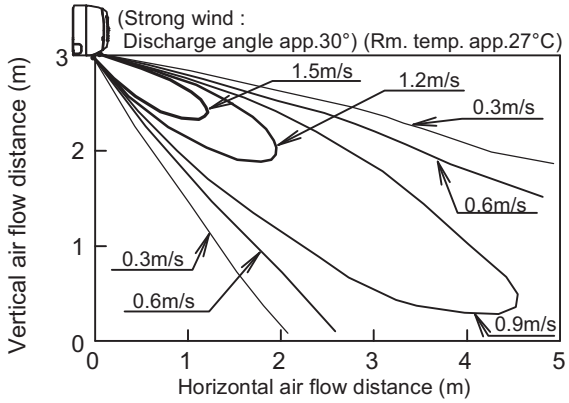

Cooling : Distribution of temperature

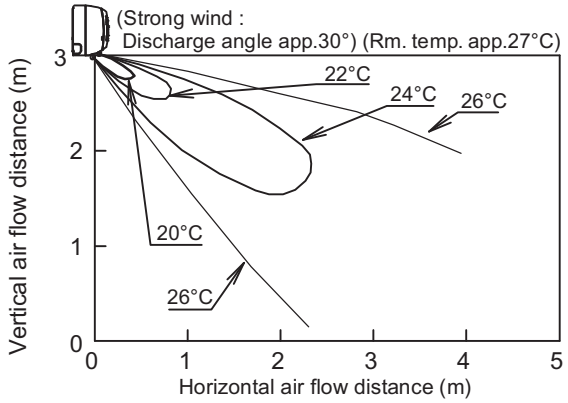

Wall Mounted (K1 type)

S-60PK1E5A / 71PK1E5A

Heating : Distribution of wind velocity

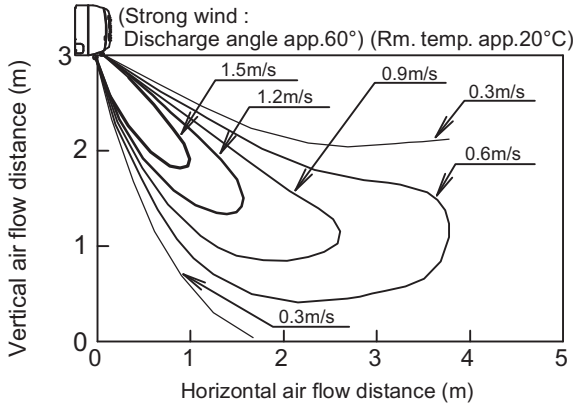

Heating : Distribution of temperature

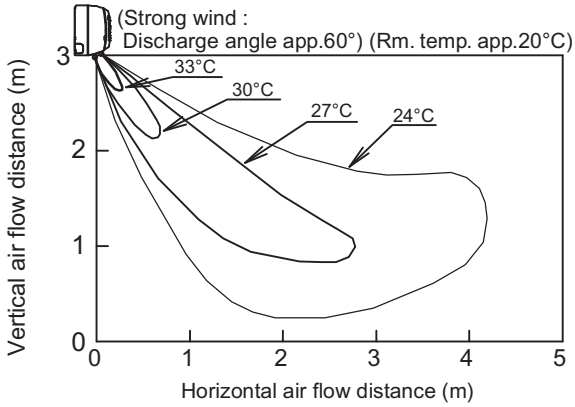

Cooling : Distribution of wind velocity

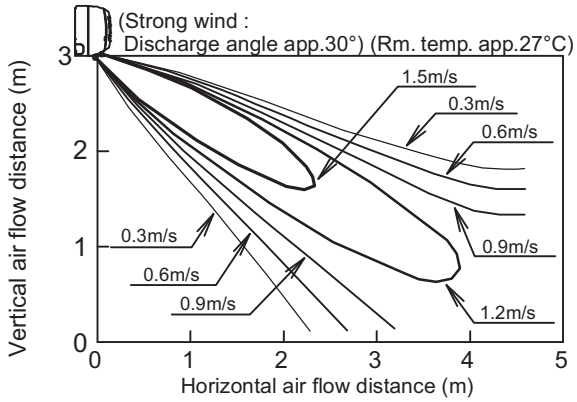

Cooling : Distribution of temperature

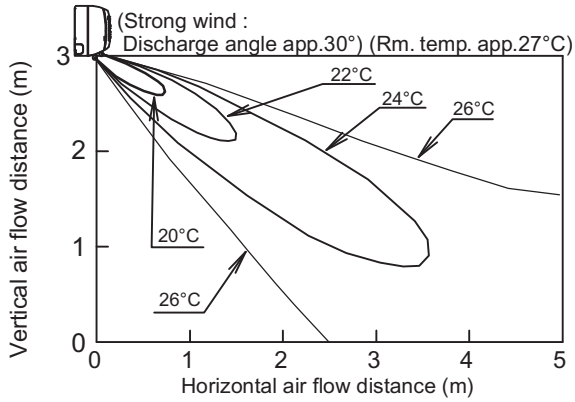

S-100PK1E5A

Heating : Distribution of wind velocity

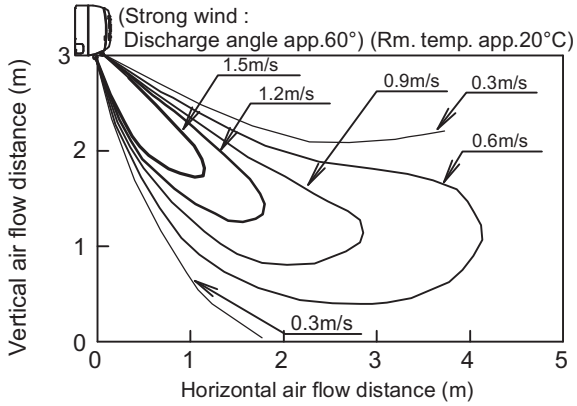

Heating : Distribution of temperature

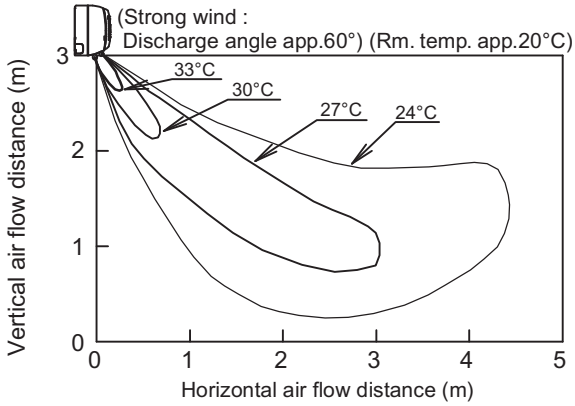

Cooling : Distribution of wind velocity

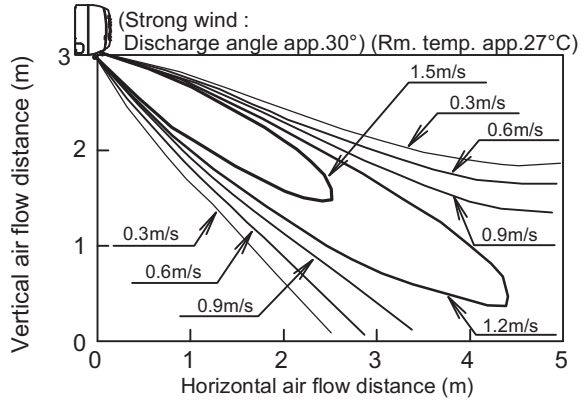

Cooling : Distribution of temperature

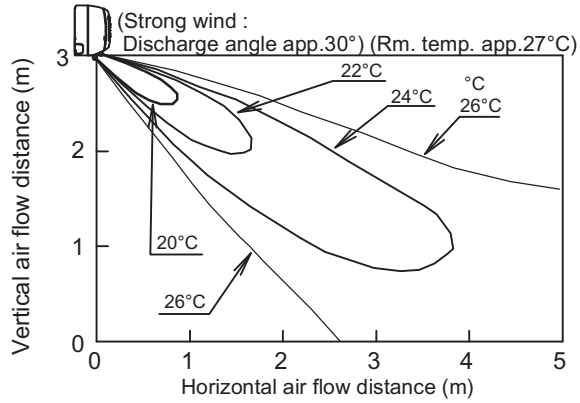

1-9. Fresh Air Intake

1-9-1. Precautions Regarding External Air Intake

(1) Ventilation Load

Ensure that the design of the air-conditioner takes air-conditioning loads into consideration when external air intake is involved.

(2) Restrictions on External Air Intake

Ensure that the design conforms to the restrictions on air intake volume stipulated in accordance with the model of the indoor unit and the intake method. Consideration must also be taken to mixed air content listed in (3) below without fail.

* If the air intake volume does not satisfy the required ventilation volume, air must be fed into the room separately with the use of a total heat exchanger or a fresh air processing air-conditioner, etc.

(3) Mixed Air

The amount of external air intake must be set within the scope of the unit•s usage conditions when external air and internal air is mixed together. This is especially important in the following cases, in which it is necessary to either feed external air into the room after it has been processed or reduce the amount of external air that is fed in.

① When the external dew-point temperature is greater than the dry-bulb temperature of the air sucked into the unit
Ensure that processing is performed so that the external dew-point temperature is lower than the temperature of the air sucked into the unit to prevent the risk of condensation building up.

② In the case of low external temperatures
There are cases in which the temperature of mixed air is lower than the operating range of the unit if excessive amounts of external air intake are used when the external temperature is low.
This problem is to be solved by either feeding external air into the room after it has been processed or reducing the amount of external air that is fed in.

③ When used in combination with humidifiers
External air must always be processed when the external air temperature reaches freezing point to prevent the risk of the humidifier freezing.

(4) Arranging Ducts and Filters in the Field

External air intake ducting must be arranged in the field.
External air filters must also be installed without fail in order to prevent the intake of dust and grit.

(5) Thermal Insulation for Ducts

Ensure that all external air intake ducting is heat-insulated without fail. Failure to observe this may result in the build-up of condensation.

(6) External Air Intake Coupling

Ensure that the design for external air intake is coupled with the fan blower operations of the indoor unit.
There are cases in which the dust that accumulates in the filter is blown into the room if the external air is fed from the filter. There are also cases in which the noise of external air being fed into the room can be heard from the indoor unit if external air is forcibly fed when the booster fan or other components on the indoor unit are not operating.

(7) Booster Fan Selection

Select the booster fan in accordance with the resistance of the external air intake duct (diagram on the pressure loss characteristics of the air flow volume for flexible cylindrical ducts) and the resistance prevalent inside the unit (external air intake volume & resistance within unit / operation noise characteristics).

(8) Attaching the External Air Intake Flange

Regarding the installation direction of the external air intake duct, refer to the Installation Instructions provided with the external air intake duct.

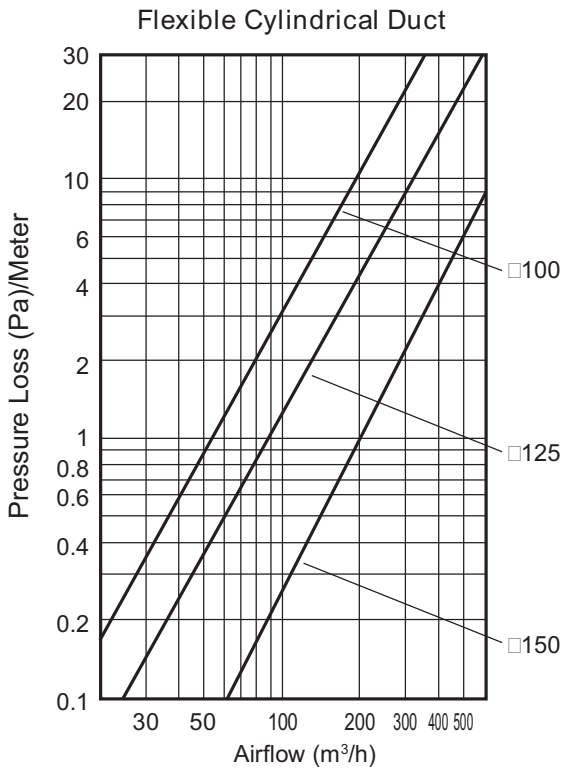

Air Flow Volume for Flexible Cylindrical Duct-Pressure Loss

1-9-2. External Air Intake Volume & Resistance Within Unit / Operation Noise Characteristics

● 4-Way Cassette (U1 Type)

CAUTION Use the following diagram along with the section "1-9-1. Precautions Regarding External Air Intake"

1-9-2-1. In a Case of External Air Intake Using Air Intake Chamber (CZ-FCU2+CZ-ATU2)

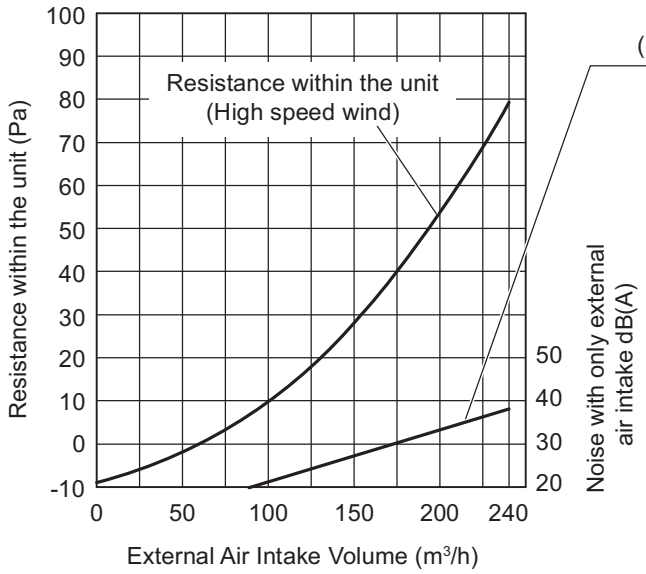

External Air Intake Volume & Resistance Within Unit/ Operation Noise Characteristics

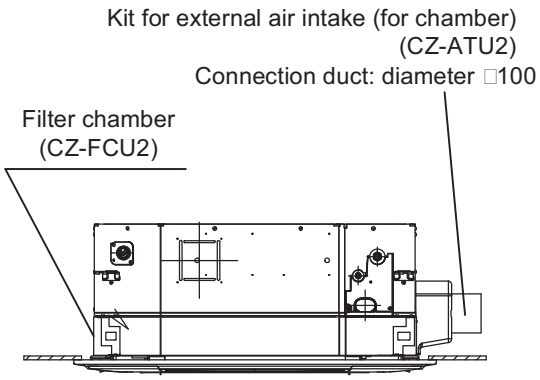

With the External Air Intake Chamber Attached

1. Calculate the operation noise when external air is being fed by combining the noise when only external air is being fed as shown in the diagram for operation noise characteristics and the operation noise of the unit as stipulated in the catalogue.
2. The operation noise conforms to □IS standards and constitute measurements taken in an anechoic chamber 1.5m directly below the indoor unit. Under normal circumstances, the diagram shown above is greater owing to the effects of surrounding noise and reverberation when the unit is actually installed.

The amount of external air that is possible to feed when external air intake chamber is in use (CZ-FCU2+CZ-ATU2)

Type	36	45	50	60	71	100	125	140
Permissible air intake volume (m^3/h)	180	180	180	190	240	240	240	240

* The operation noise for models that use small units is lower, so use values that are within the range shown in the above table. Using values that exceed these will result in noise when only external air is fed being louder than the noise emitted from the unit.

● Sample selection of booster fans

In a case of necessity at 200m^3/h of external air intake:

1. Resistance within the unit Diagram from "Resistance within the unit" 55 Pa
2. Duct resistance in case of duct with 4m length

Duct resistance Diagram from "Air Flow Volume for Flexible Cylindrical Duct-Pressure Loss" 40 Pa (=10 Pa/m x 4m)

Total 95 Pa

Therefore, a booster is required to save a total 95 Pa of static pressure.

1-9-2-2. In a Case of External Air Intake to Unit Directly (Using external air intake kit for unit: CZ-BCU2)

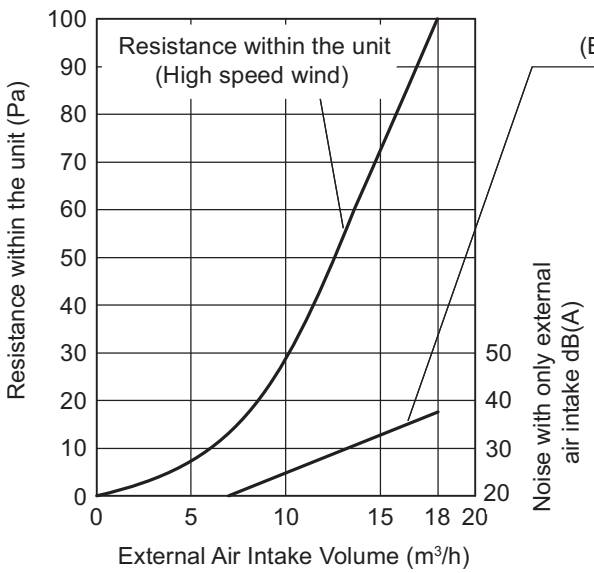

External Air Intake Volume & Resistance Within Unit/ Operation Noise Characteristics

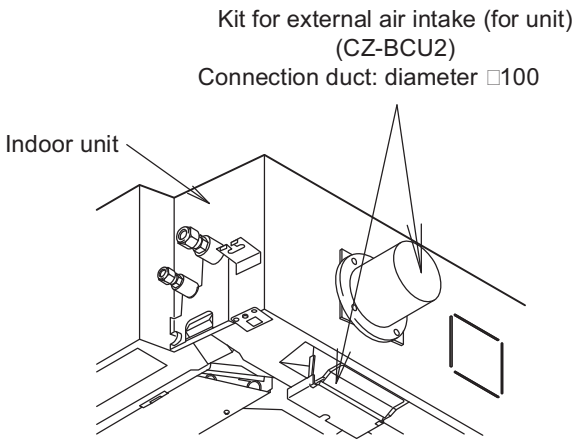

With the External Air Intake Flange Attached

1. Calculate the operation noise when external air is being fed by combining the noise when only external air is being fed as shown in the diagram for operation noise characteristics and the operation noise of the unit as stipulated in the catalogue.
2. The operation noise conforms to □IS standards and constitute measurements taken in an anechoic chamber 1.5m directly below the indoor unit. Under normal circumstances, the diagram shown above is greater owing to the effects of surrounding noise and reverberation when the unit is actually installed.

The amount of external air intake that is possible to feed when it is fed directly into the unit (CZ-BCU2)

Type	36	45	50	60	71	100	125	140
Permissible air intake volume (m^3/h)	13	15	15	17	18	18	18	18

* The operation noise for models that use small units is lower, so use values that are within the range shown in the above table. Using values that exceed these will result in noise when only external air is fed being louder than the noise emitted from the unit.

1-9-2. External Air Intake Volume & Resistance Within Unit / Operation Noise Characteristics (continued)

● Ceiling (T2 Type)

1-9-2-3. In a Case of External Air Intake to Unit Directly (Using external air intake cylindrical flange)

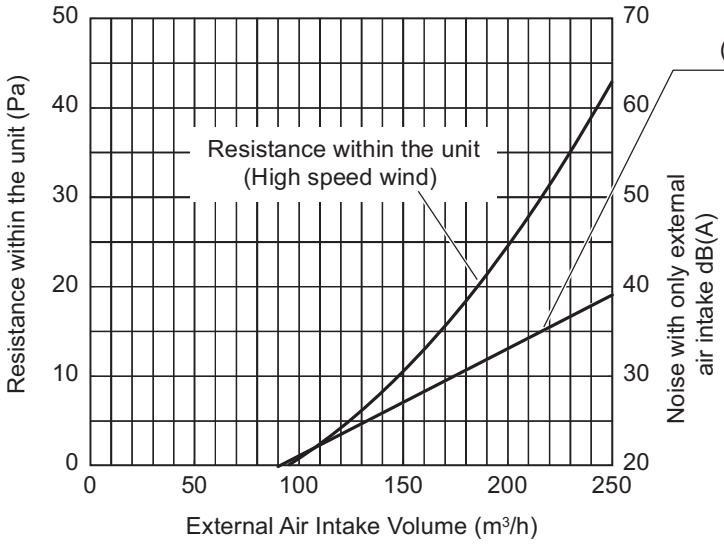

External Air Intake Volume & Resistance Within Unit/ Operation Noise Characteristics

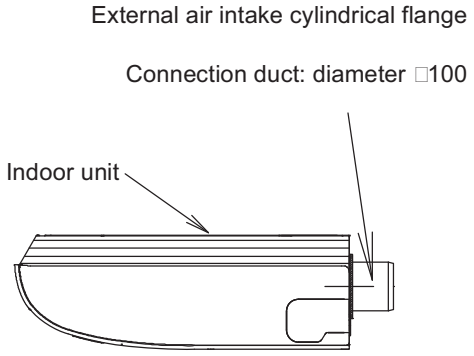

With the External Air Intake Flange Attached

1. Calculate the operation noise when external air is being fed by combining the noise when only external air is being fed as shown in the diagram for operation noise characteristics and the operation noise of the unit as stipulated in the catalogue.
2. The operation noise conforms to □IS standards and constitute measurements taken in an anechoic chamber 1m front and 1m below the indoor unit. Under normal circumstances, the diagram shown above is greater owing to the effects of surrounding noise and reverberation when the unit is actually installed.

The amount of external air intake that is possible to feed when it is fed directly into the unit

Type	36	45	50	60	71	100	125	140
Permissible air intake volume (m^3/h)	160	170	170	200	210	240	240	240

* The operation noise for models that use small units is lower, so use values that are within the range shown in the above table. Using values that exceed these will result in noise when only external air is fed being louder than the noise emitted from the unit.

1-9-2. External Air Intake Volume & Resistance Within Unit / Operation Noise Characteristics (continued)

● Low Silhouette Ducted (F2 Type)

1-9-2-4. In a Case of External Air Intake to Unit Directly (Using external air intake cylindrical flange)

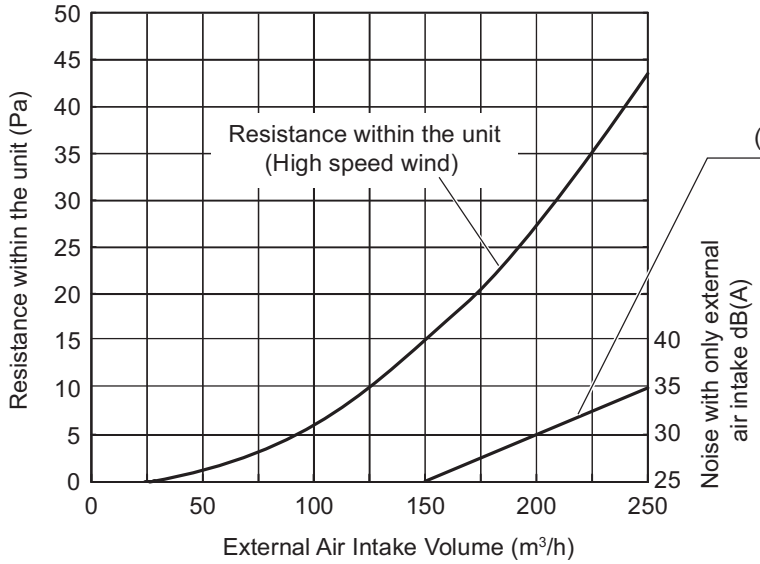

External Air Intake Volume & Resistance Within Unit/ Operation Noise Characteristics

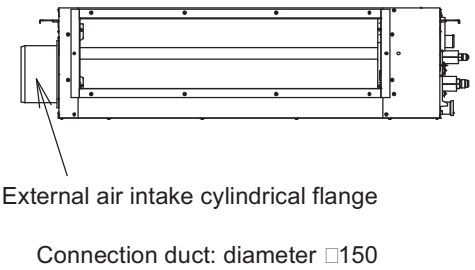

With the External Air Intake Flange Attached

1. Calculate the operation noise when external air is being fed by combining the noise when only external air is being fed as shown in the diagram for operation noise characteristics and the operation noise of the unit as stipulated in the catalogue.
2. The operation noise conforms to □IS standards and constitute measurements taken in an anechoic chamber 1.5m directly below the indoor unit. Under normal circumstances, the diagram shown above is greater owing to the effects of surrounding noise and reverberation when the unit is actually installed.

The amount of external air intake that is possible to feed when it is fed directly into the unit

Type	36	45	50	60	71	100	125	140
Permissible air intake volume (m^3/h)	126	126	150	180	180	240	240	240

* The operation noise for models that use small units is lower, so use values that are within the range shown in the above table. Using values that exceed these will result in noise when only external air is fed being louder than the noise emitted from the unit.

1-10. Electrical Wiring

■ General Precautions on Wiring

(1) Before wiring, confirm the rated voltage of the unit as shown on its nameplate, then carry out the wiring closely following the wiring diagram.

(2) Provide a power outlet to be used exclusively for each unit and a circuit breaker for overcurrent protection should be provided in the exclusive line.

(3) To prevent possible hazards from insulation failure, the unit must be grounded.

(4) Each wiring connection must be done in accordance with the wiring system diagram. Wrong wiring may cause the unit to misoperate or become damaged.

(5) Do not allow wiring to touch the refrigerant tubing, compressor, or any moving parts of the fan.

(6) Unauthorized changes in the internal wiring can be very dangerous. The manufacturer will accept no responsibility for any damage or misoperation that occurs as a result of such unauthorized changes.

(7) Regulations on wire diameters differ from locality to locality. For field wiring rules, please refer to your LOCAL ELECTRICAL CODES before beginning.
You must ensure that installation complies with all relevant rules and regulations.

(8) To prevent malfunction of the air conditioner caused by electrical noise, care must be taken when wiring as follows:

- The remote control wiring and the inter-unit control wiring should be wired apart from the inter-unit power wiring.
- Use shielded wires for inter-unit control wiring between units and ground the shield on both sides.

(9) If the power supply cord of this appliance is damaged, it must be replaced by a repair shop designated by the manufacturer, because special-purpose tools are required.

CAUTION Check local electrical codes and regulations before wiring.
Also, check any specified instruction or limitations.

■ Recommended Wire Length and Wire Diameter for Power Supply System

Indoor unit

Type	(B) Power supply	Time delay fuse or circuit capacity
	2.5 mm^2	
U1	Max. 130 m	10-16 A

Indoor unit

Type	(B) Power supply	Time delay fuse or circuit capacity
	2.5 mm^2	
K1	Max.150 m	10A
F1	Max.130 m	10A
T2, N1	Max.130 m	10-16A

Control wiring

(C) Inter-unit (between outdoor and indoor units) control wiring	(D) Remote control wiring	(E) Control wiring for group control
0.75 mm^2 (AWG #18) Use shielded wiring*	0.75 mm^2 (AWG #18)	0.75 mm^2 (AWG #18)
Max. 1,000 m	Max. 500 m	Max. 200 m (Total)

NOTE

* With ring-type wire terminal.

■ Wiring System Diagrams

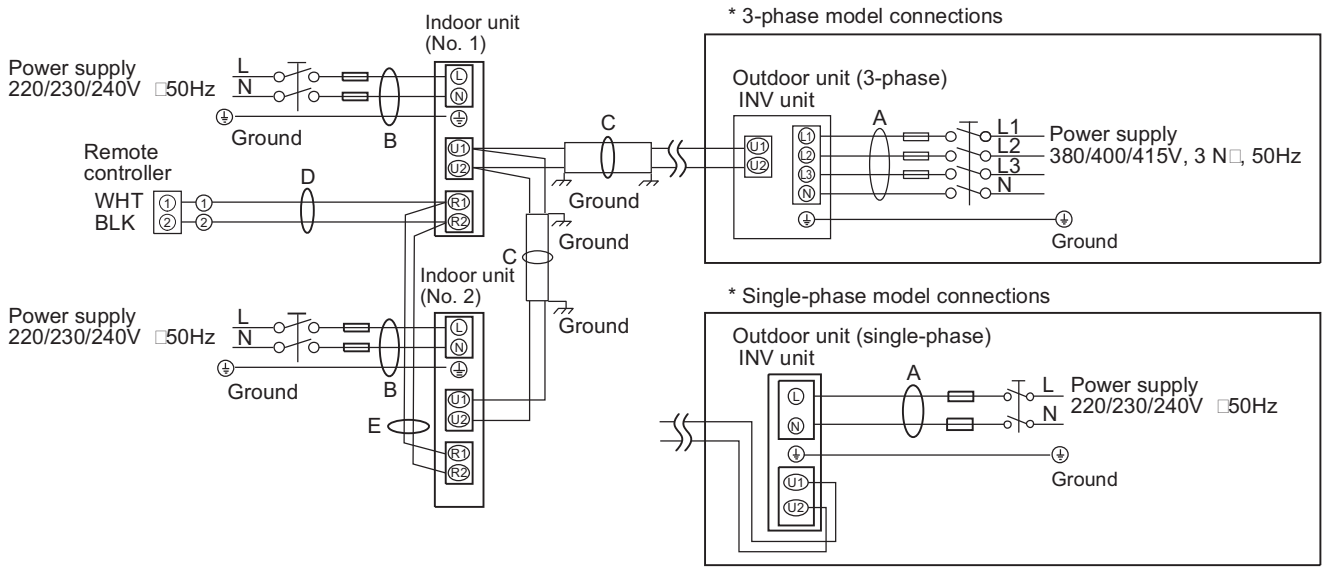

NOTE

(1) Refer to •Recommended Wire Length and Wire Diameter for Power Supply System□for the explanation of •A□, •B□, •C□, •D□and •E□in the above diagram.

(2) The basic connection diagram of the indoor unit shows the terminal boards, so the terminal boards in your equipment may differ from the diagram.

(3) Refrigerant Circuit (R.C.) address should be set before turning the power on.

(4) Regarding R.C. address setting, refer to the installation instructions supplied with the remote controller (optional). Auto address setting can be executed by remote controller automatically. Refer to the installation instructions supplied with the remote controller (optional).

6P terminal board

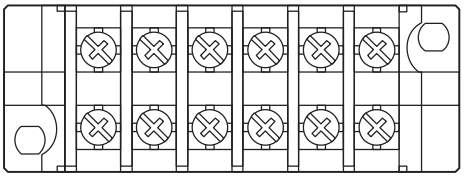

L N U1 U2 R1 R2

Power supply | Unit control line | Remote control line

U1 Type

6P terminal board

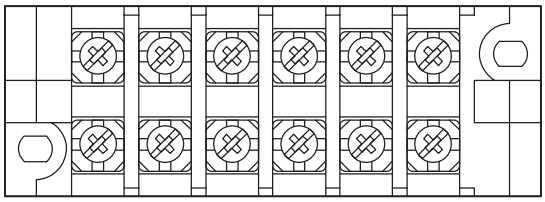

L N U1 U2 R1 R2

Power supply | Unit control line | Remote control line

T2, F1 Type

5P terminal board

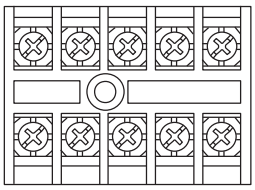

L N U1 U2

Power supply | Unit control line

K1 Type

6P terminal board

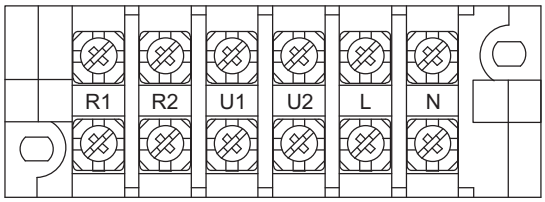

R1 R2 U1 U2 L N

Remote control line | Unit control line | Power supply

N1Type

CAUTION

(1) When linking the outdoor units in a network, disconnect the terminal extended from the short plug from all outdoor units except any one of the outdoor units.
(When shipping: In shorted condition.)
For a system without link (no wiring connection between outdoor units), do not remove the short plug.

(2) Do not install the inter-unit control wiring in a way that forms a loop.

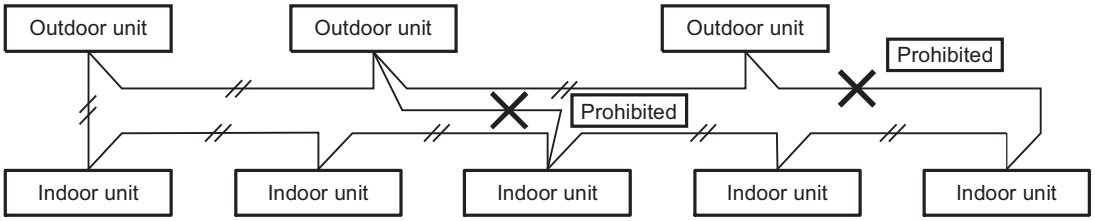

(3) Do not install inter-unit control wiring such as star branch wiring. Star branch wiring causes mis-address setting.

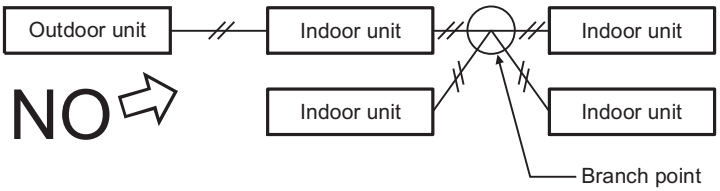

(4) If branching the inter-unit control wiring, the number of branch points should be 16 or fewer.

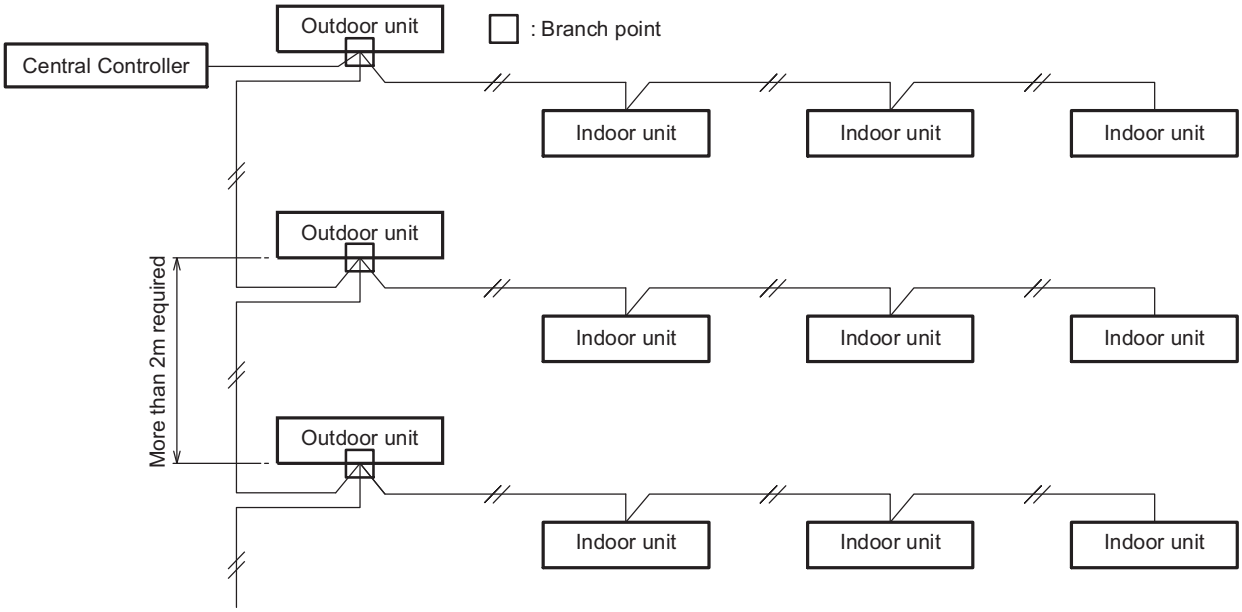

(5) Use shielded wires for inter-unit control wiring (c) and ground the shield on both sides, otherwise misoperation from noise may occur.
Connect wiring as shown in Section ■ Wiring System Diagrams.

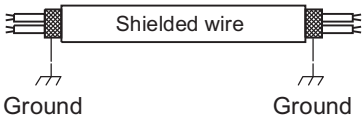

(6) • Connecting cable between indoor unit and outdoor unit shall be approved polychloroprene sheathed 5 or 3 *1.5 mm^2 flexible cord. Type designation 60245 IEC 57 (H05RN-F, GP85PCP etc.) or heavier cord.
• Use the standard power supply cables for Europe (such as H05RN-F or H07RN-F which conform to CENELEC (HAR) rating specifications) or use the cables based on IEC standard. (60245 IEC57, 60245 IEC66)

WARNING

Loose wiring may cause the terminal to overheat or result in unit malfunction. A fire hazard may also occur. Therefore, ensure that all wiring is tightly connected.
When connecting each power wire to the terminal, follow the instructions on •How to connect wiring to the terminal and fasten the wire securely with the terminal screw.

How to connect wiring to the terminal

■ For stranded wiring

(1) Cut the wire end with cutting pliers, then strip the insulation to expose the stranded wiring about 10 mm and tightly twist the wire ends. (Fig. 1-1)

(2) Using a Phillips head screwdriver, remove the terminal screw(s) on the terminal plate.

(3) Using a ring connector fastener or pliers, securely clamp each stripped wire end with a ring pressure terminal.

(4) Place the ring pressure terminal, and replace and tighten the removed terminal screw using a screwdriver. (Fig. 1-2)

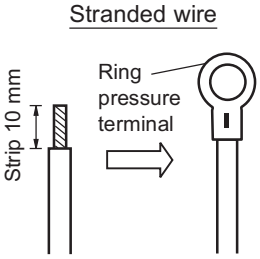

Fig. 1-1

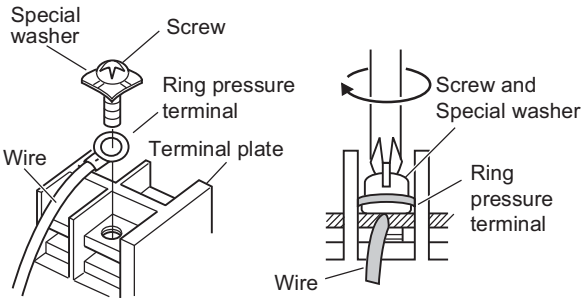

Fig. 1-2

■ Examples of shield wires

(1) Remove cable coat not to scratch braided shield. (Fig. 1-3)

(2) Unbraid the braided shield carefully and twist the unbraided shield wires tightly together. Insulate the shield wires by covering them with an insulation tube or wrapping insulation tape around them. (Fig. 1-4)

(3) Remove coat of signal wire. (Fig. 1-5)

(4) Attach ring pressure terminals to the signal wires and the shield wires insulated in Step (2). (Fig. 1-6)

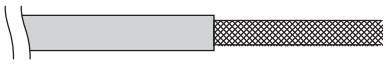

Fig. 1-3

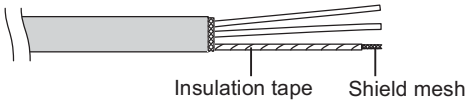

Fig. 1-4

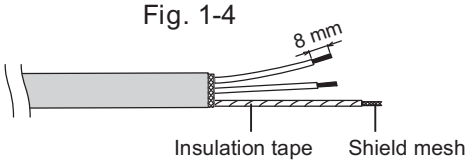

Fig. 1-5

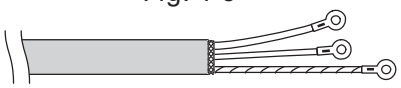

Fig. 1-6

■ Wiring samples

U1 type

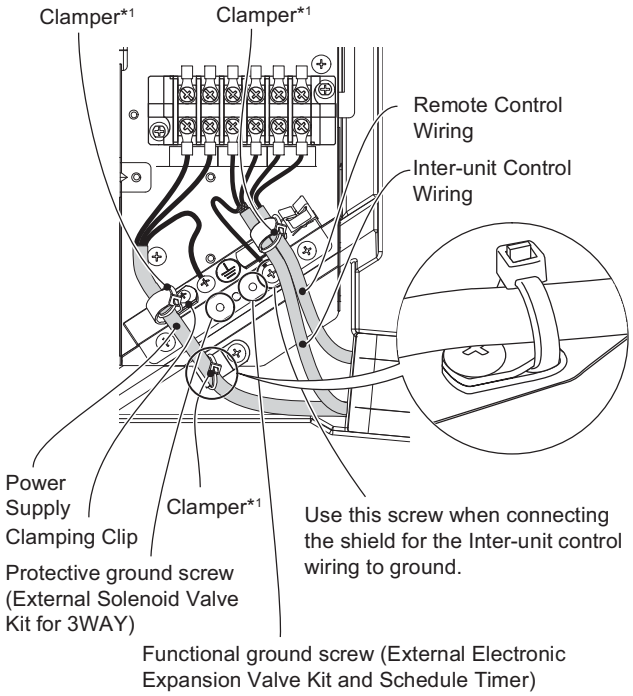

*1 Fasten tightly.

F1 type

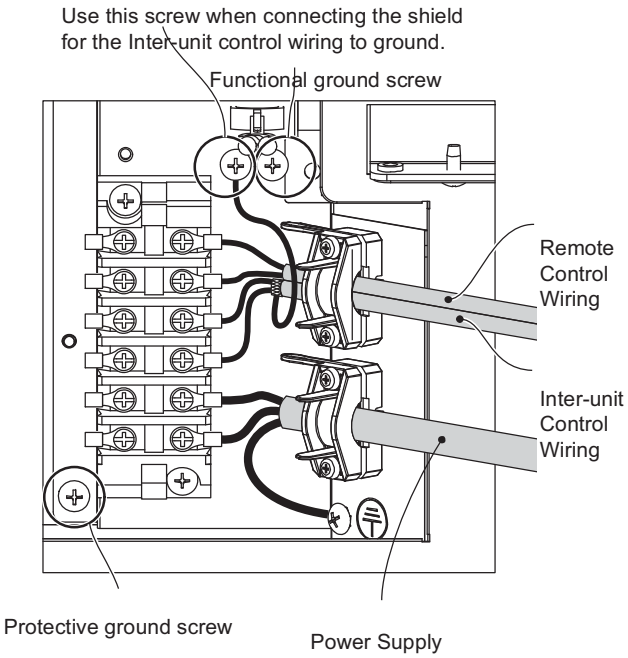

■ Wiring samples

T2 type

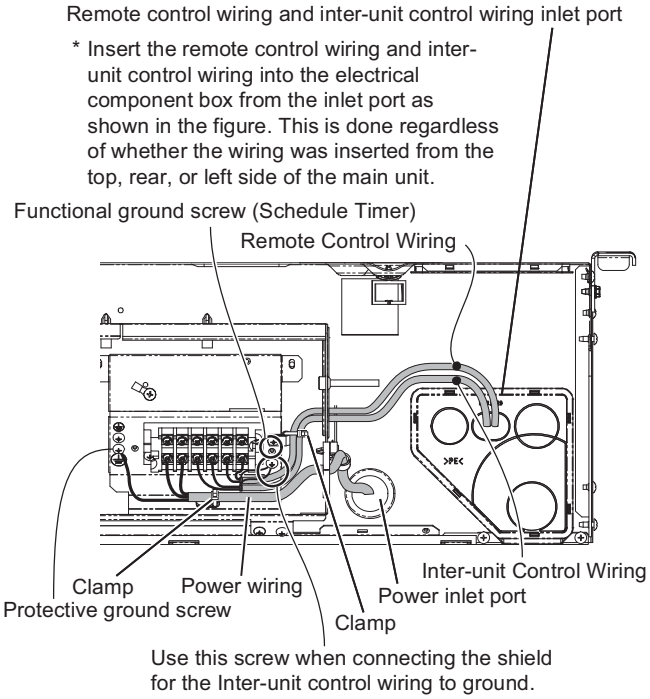

K1 type

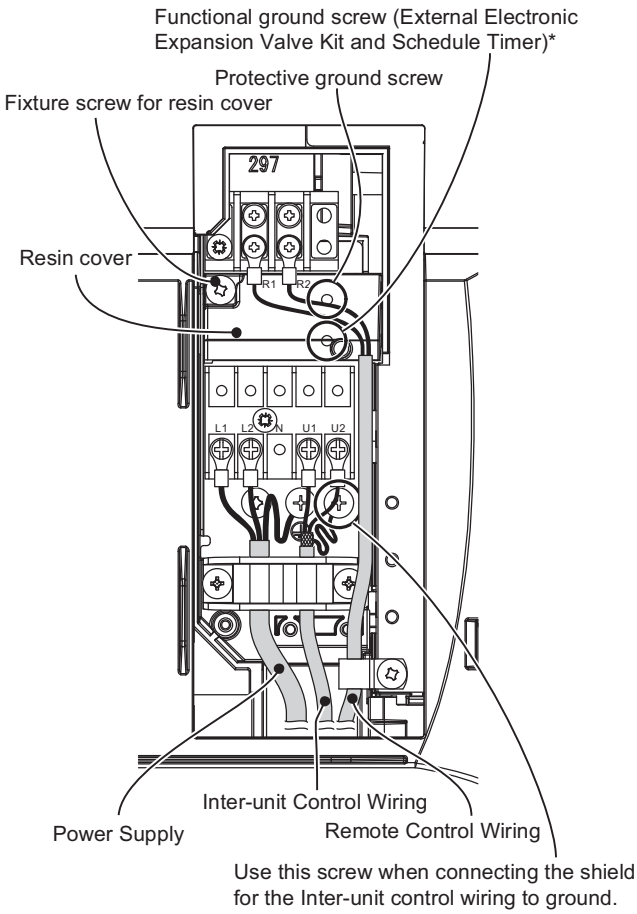

* As to functional ground screw and protective ground screw, remove the fixture screw and resin cover. Then, carry out earth ground work.

How to carry out power supply wiring

(1) Wiring connection ports
The power inlet port is located at the rear.
The remote control wiring inlet port is located at the rear (for use with the wired remote controller).

(2) How to carry out wiring

- Insert the power wiring into the indoor unit through the rubber at the side of the electrical component box.
- For wiring connection to the outdoor unit and remote control wiring, open the elongated hole of the piping cover and pass the wires through the hole.

NOTE

Be sure to use sealing putty to seal off the opening to prevent dust.

N1 type

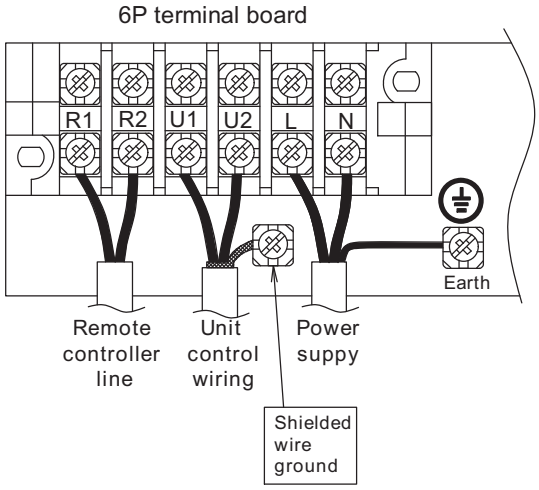

1-11. Installation instructions

■ U-50PE1E5, U-60PEY1E5, U-71PEYE5

ACCESSORIES SUPPLIED WITH OUTDOOR UNIT

Part Name	Figure	Qty	Remarks	Part Name	Figure	Qty	Remarks
Operating Instructions		1	A5-size	Installation Instructions		1	Included this instructions

SELECTING THE INSTALLATION SITE

AVOID:

- heat sources and exhaust fans, etc.
- damp, humid or uneven locations.

DO:

- choose a place as cool as possible.
- choose a place that is well ventilated and outside air temperature does not exceed maximum 45°C constantly.
- allow enough room around the unit for air intake/exhaust and possible maintenance.
- use lug bolts or equal to bolt down unit, reducing vibration and noise.
- If cooling operation is to be used when the outdoor air temperature is □5°C or below, install a duct on the outdoor unit.

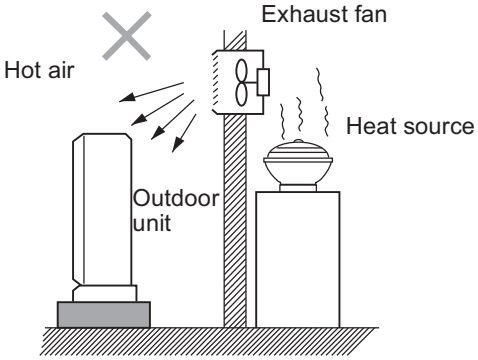

Installation space for outdoor unit (single-phase)

Install the outdoor unit with a sufficient space around the outdoor unit for operation and maintenance.

(1) Obstructions on the left side, right side and rear side (Front side and above the unit are opened).

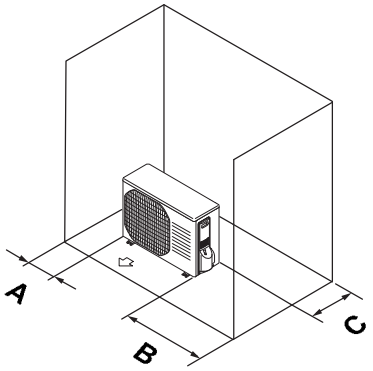

A	B	C
5 cm or more	25 cm or more	5 cm or more

(2) Obstructions on the front side and rear side (Left side, right side and above the unit are opened).

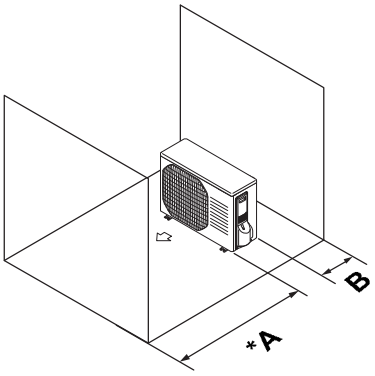

A	B
50 cm or more	5 cm or more

* For compressor replacement, 50 cm or more is required on the front side even when using the air discharge chamber. If the height of the obstruction is above 2 m, over 1 m of space is required.

(3) Obstructions on the front side and above the unit (Left side, right side and rear side are opened).

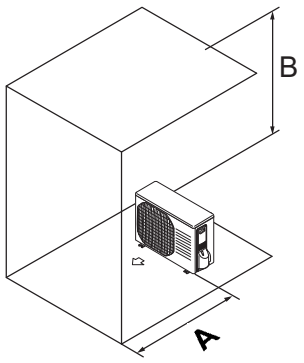

A	B
50 cm or more	30 cm or more

In case of multiple installations

- Provide a solid base (concrete block, 10 × 40 cm beams or equal), a minimum of 15 cm above ground level to reduce humidity and protect the unit against possible water damage and decreased service life.
- Use lug bolts or equal to bolt down unit, reducing vibration and noise.

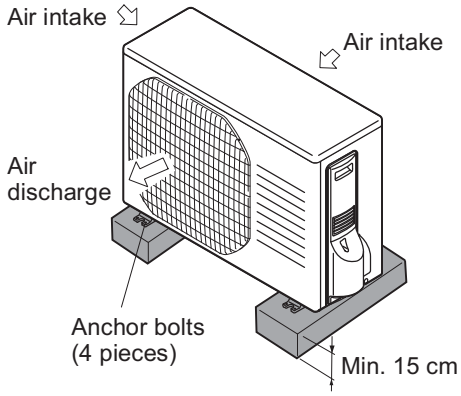

Air Discharge Chamber for Top Discharge

Be sure to install the air discharge chamber in the field when:

- it is difficult to keep a space of min. 50 cm between the air discharge outlet and an obstacle.
- the air discharge outlet is facing a sidewalk and discharged hot air annoys passers-by.

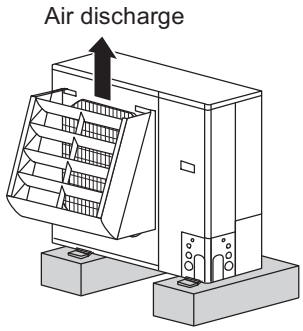

Installing the Unit in Heavy Snow Areas

In locations with strong wind, snow-proof ducting should likewise be fitted and direct exposure to the wind should be avoided as much as possible.

■ Countermeasures against snow and wind

In regions with snow and strong wind, the following problems may occur when the outdoor unit is not provided with a platform and snow-proof ducting:

a) The outdoor fan may not run and damage of the unit may be caused.
b) There may be no airflow.
c) The tubing may freeze and burst.
d) The condenser pressure may drop because of strong wind, and the indoor unit may freeze.

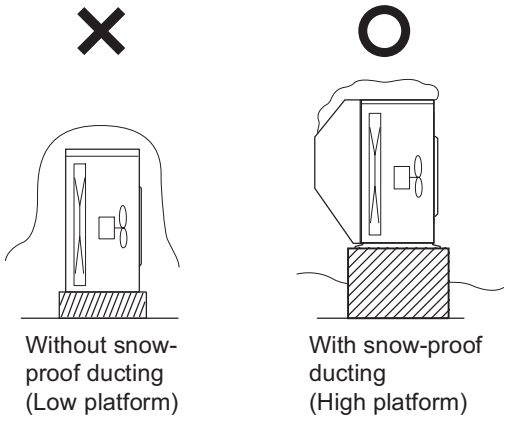

In regions with significant snowfall, the outdoor unit should be provided with a platform and snow-proof duct.

Precautions for Installation in Heavy Snow Areas

(1) The platform should be higher than the maximum snow depth +50 cm.
(2) The 2 anchoring feet of the outdoor unit should be used for the platform, and the platform should be installed beneath the air intake side of outdoor unit.
(3) The platform foundation must be firm and the unit must be secured with anchor bolts.
(4) In case of installation on a roof subject to strong wind, countermeasures must be taken to prevent the unit from being blown over.

Dimensions of Snow / Wind-proof Ducting and Refrigerant Tubing Space for Installation

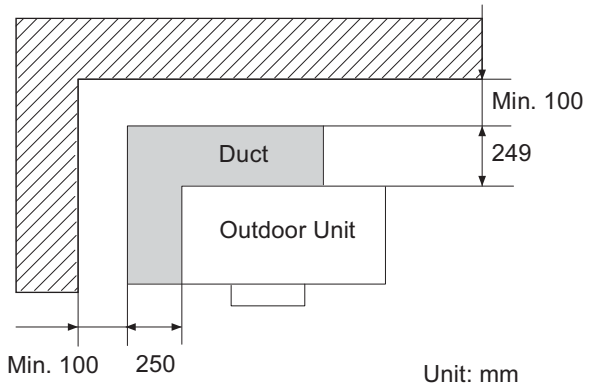

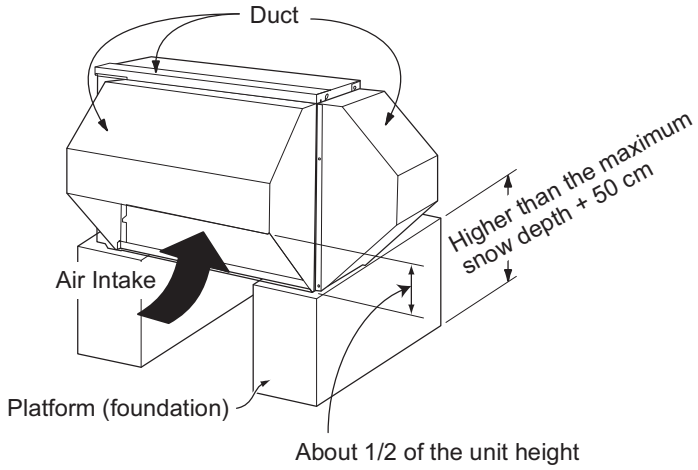

Tubing Size

(A) Single type

- Refrigerant tubing between the indoor and outdoor units should be kept as short as possible.
- The lengths of the refrigerant tubes between the indoor and outdoor units are limited by the elevation difference between the 2 units. During tubing work, try to make both the tubing length (L) and the difference in elevation (H1) as short as possible.

Single

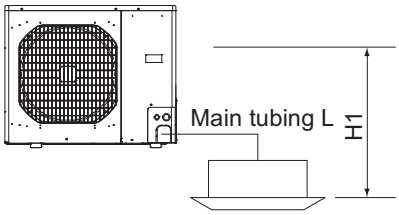

Outdoor unit type	U-50PE1E5	U-60PEY1E5 U-71PEY1E5
Maximum allowable tubing length	40 m	50 m
Charge-less tubing length (actual length)	3 □30 m	3 □20 m
Additional charge per 1 m	20 g	40 g

(B) Simultaneous operation multi (Twin)

NOTE

Because the indoor units run simultaneously, install them within the same room.

Table 1-1

Item		Contents	Symbol		Actual length (m)		
			Single	Twin	50	60 □71 single	71 twin
Allowable tubing lengths	Maximum allowable tubing length	One-way length of tubing from outdoor unit to the most distant indoor unit	L	L + ℓ1 L + ℓ2	≤40	≤50	≤40
	Maximum distribution tubing length	Maximum length following the first branch point (No. 1 distribution)	□	ℓ1, ℓ2	□	□	≤15
Maximum branch tubing length		Difference between the maximum length and minimum length in tubing following the first branch point	□	ℓ1 □ ℓ2 ℓ1 □ ℓ2	□	□	≤10
Maximum difference between lengths of No. 1 distribution tubing (double twin)			□	□	□	□	□
Maximum difference between lengths of No. 2 distribution tubing (double twin)			□	□	□	□	□
Maximum allowable height difference	Maximum indoor-outdoor height difference	If outdoor unit is higher	H1		≤30	≤30	≤30
		If outdoor unit is lower			≤15	≤15	≤15
	Maximum height difference between indoor units		□	H2	□	□	≤0.5

* For connection tubing sizes, refer to Table above.

Twin

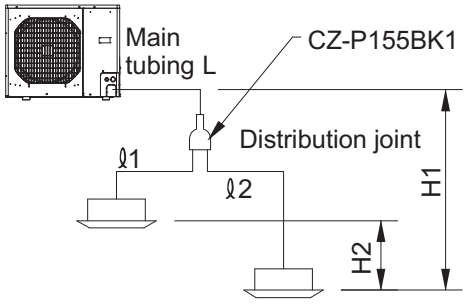

NOTE

- For refrigerant tube branches, use the optional distribution joints.
- For cautions on the use of the optional distribution joints, be sure to refer to the provided instruction sheet.
  Also, be careful to install them in the correct direction (orientation).

Table 1-2 Tubing Data for Models (Single, Twin)

Tubing Data \ Models			U-50PE1E5	U-60PEY1E5 U-71PEY1E5
Tubing size outer diameter	Liquid tube	mm (in.)	6.35 (1/4)	9.52 (3/8)
	Gas tube	mm (in.)	12.7 (1/2)	15.88 (5/8)
Limit of tubing length		(m)	40	50 * 3
Limit of elevation difference between the 2 units	Outdoor unit is placed higher	(m)	30	30
	Outdoor unit is placed lower	(m)	15	15
Max. allowable tubing length at shipment		(m)	3 □30	3 □20
Required additional refrigerant		(g/m)	20 * 2	40 *1
Refrigerant charged at shipment		(kg)	1.65	1.7

No additional charge of compressor oil is necessary.
*1 If total tubing length becomes 20 to 50 m, charge additional refrigerant by 40 g/m.
*2 If total tubing length becomes 30 to 40 m, charge additional refrigerant by 20 g/m.
*3 In case of single connection, limit of tubing length is 50 m.
In case of twin connection, limit of tubing length is 40 m.

Table 1-3 Connection Tube Sizes

	Main tubing (L)	Indoor unit connection tube (ℓ1, ℓ2)	
Type capacity of indoor unit	71	71	36
Gas tube	□15.88	□15.88	□12.7
Liquid tube	□9.52	□9.52	□6.35
Amount of additional charge per 1 m	40 g	40 g	20 g

Charge with the amount of additional refrigerant calculated using the formula below, based on the values in Table 1-3 and the size and length of the liquid tubing.

Amount of additional refrigerant charge (g)

Do not remove refrigerant from the system, even if the result of the calculation is negative.

Additional refrigerant amount (g) = Additional refrigerant for main tubing (g) + Additional refrigerant for distribution tubing (g) □Outdoor unit charge-less refrigerant amount (g)
= 40 × (a) + 20 × (b) □400*1 (60 □71 types)
*1 50 Type of outdoor unit is 600 g.
*1 In case of twin connection, 71 type of outdoor unit is 400 g.

(Use with the current refrigerant charge.)

(a) Actual length (m) of main tubing (□9.52) Refrigerant charge per 1 m of actual length = 40 g/m (60 □71 types)

(b) Total length of distribution tubing (□6.35) Refrigerant charge per 1 m of actual length = 20 g/m

Example

- Sample tubing lengths
  L = 25 m ℓ1 = 5 m
  ℓ2 = 10 m
- Find the liquid tube size from Table 1-3.
  L : □9.52 (71 type)
  ℓ1 □ℓ2 : □6.35
- The amount of additional on-site refrigerant charge is found by subtracting the outdoor unit charge-less refrigerant amount from the total charge amount for all tube sizes.

□9.52 → L	: 25 m	× 40 g / m	=	1000
ø6.35 → ℓ1 □ℓ2	: (5 + 10) m	× 20 g / m	=	300
Outdoor unit charge-less refrigerant amount				□400
		Total		+900

- The amount of additional on-site refrigerant charge is 900 g.

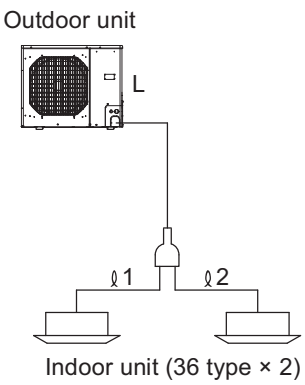

Note: For type 50, the additional refrigerant charge for tubing length (c) of 30 to 40 m is the following:
Additional refrigerant amount (g) = 20 × (c) □600

CAUTION

1. This unit requires no additional refrigerant charge up to tubing length 20 m (50 type: 30 m).
   In case of more than 20 m (50 type: 30 m), additional refrigerant charge is required.
2. In case of multi type installation, indoor units should be installed within the same room.
   If multi type indoor units are installed in different rooms, temperature control may develop problems because thermostat operation must follow the thermostat condition of 1 indoor unit only (the main unit).

WARNING

Always check the gas density for the room in which the unit is installed.

■ Check of limit density

When installing an air conditioner in a room, it is necessary to ensure that even if the refrigerant gas accidentally escapes, its density does not exceed the limit level.
If the density might exceed the limit level, it is necessary to set up an opening between it and the adjacent room, or to install mechanical ventilation which is interlocked with the leak detector.

$$\frac{\text{(Total refrigerant charged amount: kg)}}{\text{(Min. indoor volume where indoor unit is installed: m}^3\text{)}} \quad \text{Limit density 0.3 (kg/m}^3\text{)}$$

The limit density of refrigerant which is used in this unit is 0.3 kg/m³ (ISO 5149).

The shipped outdoor unit comes charged with the amount of refrigerant fixed for each type, so add it to the amount that is charged at the field. (Refer to the unit's nameplate for the amount of charged refrigerant at shipment.)

Minimum indoor volume & floor area relative to the amount of refrigerant are roughly as given in the following table.

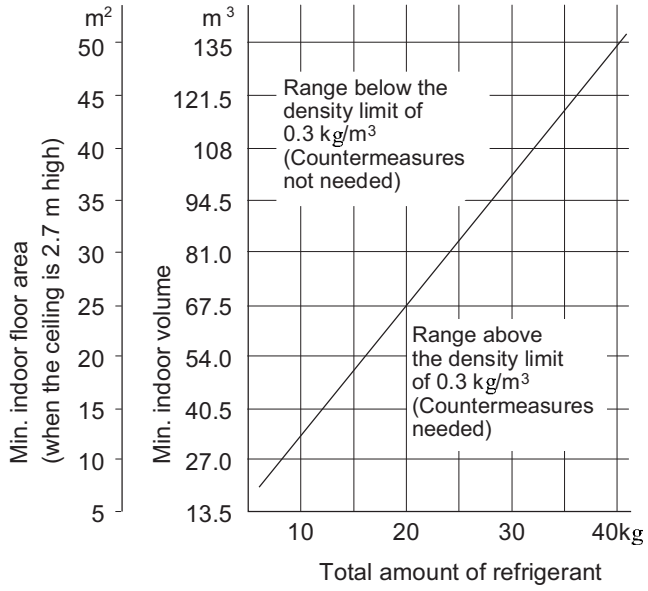

CAUTION

Pay special attention to any location, such as a basement or recessed area, etc. where leaked refrigerant can collect, since refrigerant gas is heavier than air.

HOW TO INSTALL THE OUTDOOR UNIT

Installing the Outdoor Unit

- Use concrete or a similar material to make the base, and ensure good drainage.
- Ordinarily, ensure a base height of 5 cm or more.
  If a drain pipe is used, or for use in cold-weather regions, ensure a height of 15 cm or more at the feet on both sides of the unit.
  (In this case, leave clearance below the unit for the drain pipe, and to prevent freezing of drainage water in cold-weather regions.)
- See the figure shown below for the anchor bolt dimensions.
- Be sure to anchor the feet with anchor bolts (M8). In addition, use anchoring washers on the top side.
  (Use large square 32 × 32 SUS washers with □IS nominal diameter of 8.) (Field supply)

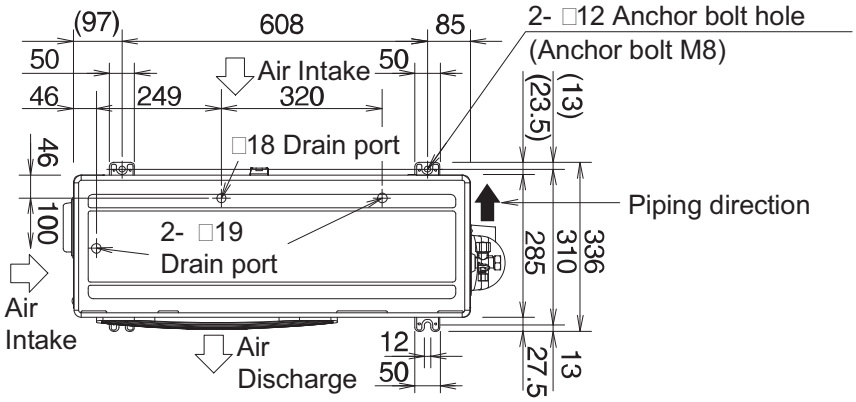

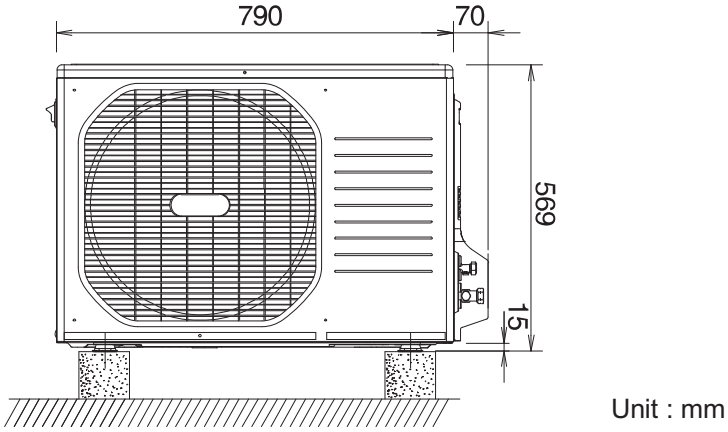

Drainage Work

Follow the procedure below to ensure adequate draining for the outdoor unit.

- For the drain port dimensions
- Ensure a base height of 15 cm or more at the feet on both sides of the unit.
- When using a drain pipe, install the drain socket (optional part STK-DS13U) onto the drain port.
  Seal the other drain port with the rubber cap supplied with the drain socket.

Routing the Tubing and Wiring

CAUTION

- Route the tubing so that it does not contact the compressor, panel, or other parts inside the unit.
  Increased noise will result if the tubing contacts these parts.
- When routing the tubing, use a tube bender to bend the tubes.
- In cold-weather regions, in order to prevent drainage water from freezing, do not install the drain socket cap. Also take steps to prevent water from accumulating around the unit.

HOW TO PROCESS TUBING

The liquid tubing side is connected by a flare nut, and the gas tubing side is connected by brazing.

Connecting the Refrigerant Tubing

Use of the Flaring Method

Many of conventional split system air conditioners employ the flaring method to connect refrigerant tubes that run between indoor and outdoor units.
In this method, the copper tubes are flared at each end and connected with flare nuts.

Flaring Procedure with a Flare Tool

Many of conventional split system air conditioners employ the flaring method to connect refrigerant tubes that run between indoor and outdoor units.
In this method, the copper tubes are flared at each end and connected with flare nuts.

(1) Cut the copper tube to the required length with a tube cutter.
It is recommended to cut approx. 30 □50 cm longer than the tubing length you estimate.

(2) Remove burrs at each end of the copper tubing with a tube reamer or file.
This process is important and should be done carefully to make a good flare.
Be sure to keep any contaminants (moisture, dirt, metal filings, etc.) from entering the tubing.

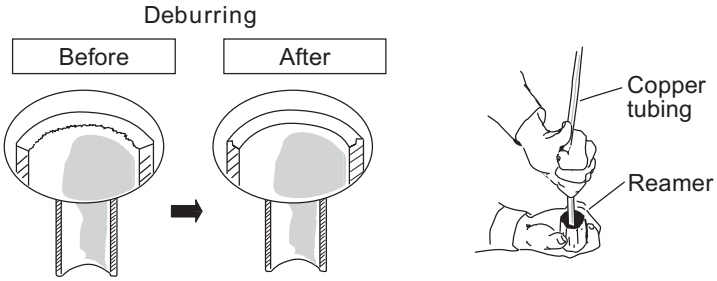

NOTE

When reaming, hold the tube end downward and be sure that no copper scraps fall into the tube.

(3) Remove the flare nut from the unit and be sure to mount it on the copper tube.

(4) Make a flare at the end of the copper tube with a flare tool.

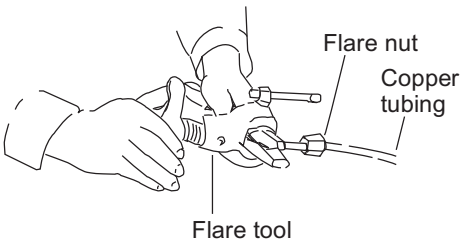

NOTE

A good flare should have the following characteristics:

- inside surface is glossy and smooth
- edge is smooth
- tapered sides are of uniform length

Flare size: A (mm)

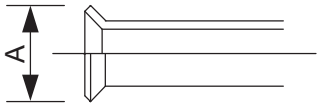

Copper tubing (Outer dia.)	A $^{0}_{\square 0.4}$
□6.35	9.1
□9.52	13.2
□12.7	16.6
□15.88	19.7

Caution Before Connecting Tubes Tightly

(1) Apply a sealing cap or water-proof tape to prevent dust or water from entering the tubes before they are used.

(2) Be sure to apply refrigerant lubricant to the matching surfaces of the flare and union before connecting them together. This is effective for reducing gas leaks.

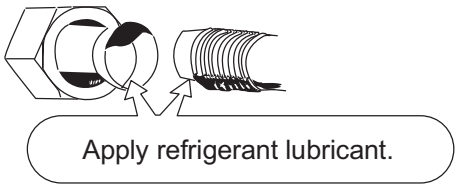

(3) For proper connection, align the union tube and flare tube straight with each other, then screw on the flare nut lightly at first to obtain a smooth match.

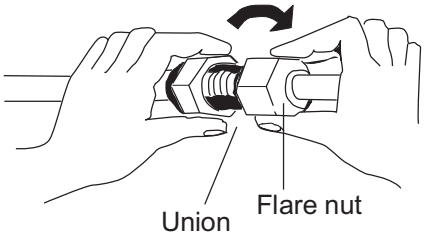

- Adjust the shape of the liquid tube using a tube bender at the installation site and connect it to the liquid tubing side valve using a flare.

Cautions During Brazing

- Replace air inside the tube with nitrogen gas to prevent copper oxide film from forming during the brazing process. (Oxygen, carbon dioxide and Freon are not acceptable.)
- Do not allow the tubing to get too hot during brazing.
  The nitrogen gas inside the tubing may overheat, causing refrigerant system valves to become damaged. Therefore allow the tubing to cool when brazing.
- Use a reducing valve for the nitrogen cylinder.
- Do not use agents intended to prevent the formation of oxide film.
  These agents adversely affect the refrigerant and refrigerant oil, and may cause damage or malfunctions.

Connecting Tubing Between Indoor and Outdoor Units

(1) Tightly connect the indoor-side refrigerant tubing extended from the wall with the outdoor-side tubing.

(2) To fasten the flare nuts, apply specified torque.

- When removing the flare nuts from the tubing connections, or when tightening them after connecting the tubing, be sure to use 2 adjustable wrenches or spanners.
  If the flare nuts are over-tightened, the flare may be damaged, which could result in refrigerant leakage and cause injury or asphyxiation to room occupants.

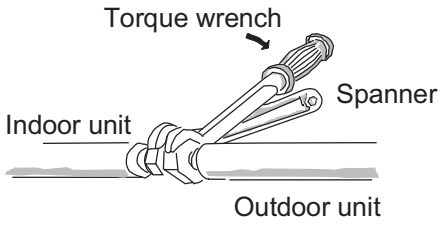

- When removing or tightening the gas tube flare nut, use 2 adjustable wrenches together: one at the gas tube flare nut, and the other at part A.

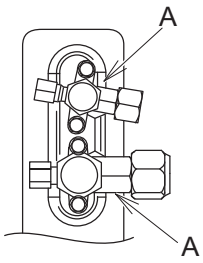

- For the flare nuts at tubing connections, be sure to use the flare nuts that were supplied with the unit, or else flare nuts for R410A (type 2).
  The refrigerant tubing that is used must be of the correct wall thickness as shown in the table below.

Tube diameter	Tightening torque (approx.)	Tube thickness
□6.35 (1/4")	14 □18 N □m □140 □180 kgf □cm□	0.8 mm
□9.52 (3/8")	34 □42 N □m □340 □420 kgf □cm□	0.8 mm
□12.7 (1/2")	49 □55 N □m □490 □550 kgf □cm□	0.8 mm
□15.88 (5/8")	68 □82 N □m □680 □820 kgf □cm□	1.0 mm

  Because the pressure is approximately 1.6 times higher than conventional refrigerant pressure, the use of ordinary flare nuts (type 1) or thin-walled tubes may result in tube rupture, injury, or asphyxiation caused by refrigerant leakage.

- In order to prevent damage to the flare caused by overtightening of the flare nuts, use the table above as a guide when tightening.
- When tightening the flare nut on the liquid tube, use a adjustable wrench with a nominal handle length of 200 mm.
- When tightening the flare nut with the adjustable wrench, do not apply to the valve stem cap with the other one. If doing so, the valve will be damaged.

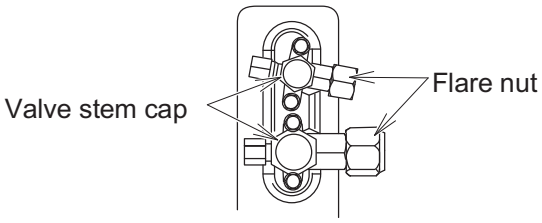

- Depending on the installation conditions, applying excessive torque may cause the nuts to crack.

Precautions for Packed Valve Operation

- If the packed valve is left for a long time with the valve stem cap removed, refrigerant will leak from the valve.
  Therefore, do not leave the valve stem cap removed.
- Use a torque wrench to securely tighten the valve stem cap.

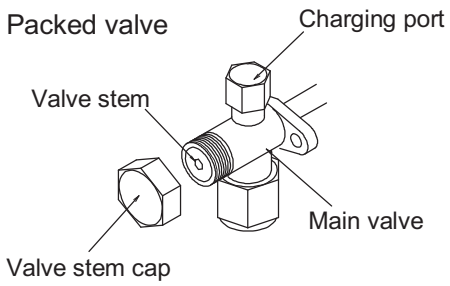

- Tightening torque:

		Tightening torque (approx.)
Charging port		10.7 □14.7 N □m □107 □147 kgf □cm□
Valve stem cap	□6.35 (Liquid side)	14.0 □20.0 N □m □140 □200 kgf □cm□
	□9.52 (Liquid side)	20.6 □28.4 N □m □206 □284 kgf □cm□
	□12.7, □15.88 (Gas side)	48.0 □59.8 N □m □480 □598 kgf □cm□

Insulating the Refrigerant Tubing

Tubing Insulation

- Thermal insulation must be applied to all units tubing, including distribution joint (purchased separately).
  - * For gas tubing, the insulation material must be heat resistant to 120°C or above. For other tubing, it must be heat resistant to 80°C or above.

  Insulation material thickness must be 10 mm or greater.
  If the conditions inside the ceiling exceed DB 30°C and RH 70□, increase the thickness of the gas tubing insulation material by 1 step.

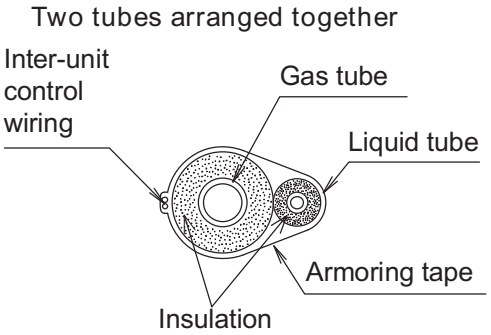

CAUTION

If the exterior of the outdoor unit valves has been finished with a square duct covering, make sure you allow sufficient space to access the valves and to allow the panels to be attached and removed.

Taping the flare nuts

Wind the white insulation tape around the flare nuts at the gas tube connections. Then cover up the tubing connections with the flare insulator, and fill the gap at the union with the supplied black insulation tape. Finally, fasten the insulator at both ends with the supplied vinyl clamps.

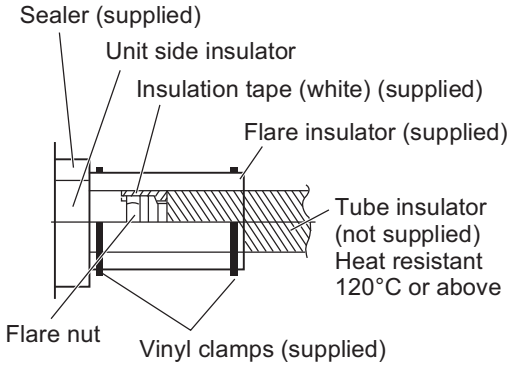

Insulation material

The material used for insulation must have good insulation characteristics, be easy to use, be age resistant, and must not easily absorb moisture.

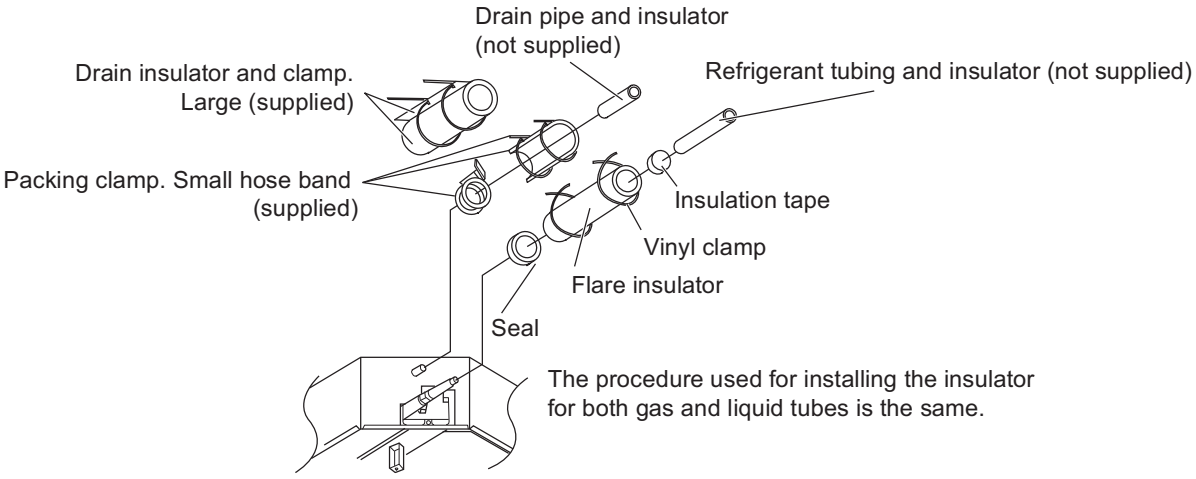

CAUTION

After a tube has been insulated, never try to bend it into a narrow curve because it can cause the tube to break or crack.
Never grasp the drain or refrigerant connecting outlets when moving the unit.

Taping the Tubes

(1) At this time, the refrigerant tubes (and electrical wiring if local codes permit) should be taped together with armoring tape in 1 bundle.
To prevent condensation from overflowing the drain pan, keep the drain hose separate from the refrigerant tubing.

(2) Wrap the armoring tape from the bottom of the outdoor unit to the top of the tubing where it enters the wall. As you wrap the tubing, overlap half of each previous tape turn.

(3) Clamp the tubing bundle to the wall, using 1 clamp approx. each meter.

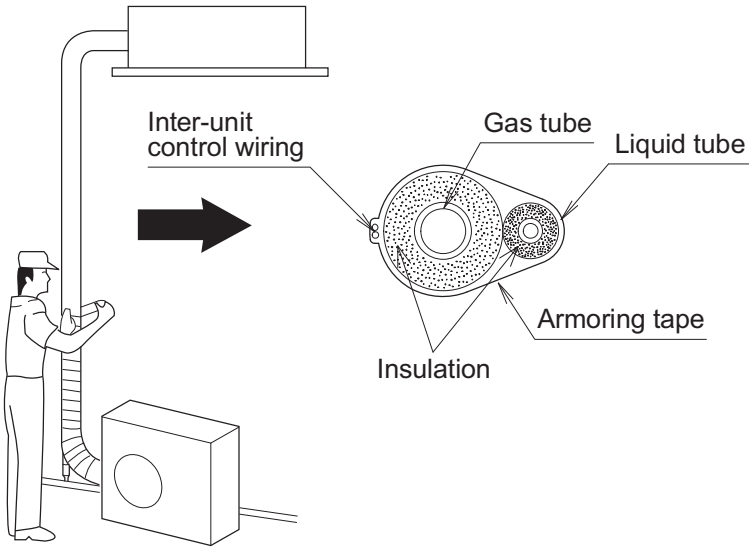

NOTE

Do not wind the armoring tape too tightly since this will decrease the heat insulation effect.
Also ensure that the condensation drain hose splits away from the bundle and drips clear of the unit and the tubing.

Finishing the Installation

After finishing insulating and taping over the tubing, use sealing putty to seal off the hole in the wall to prevent rain and draft from entering.

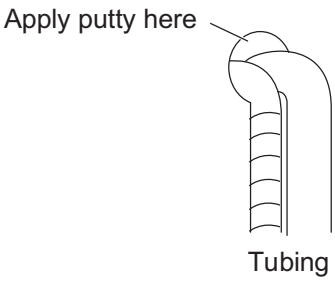

LEAK TEST, EVACUATION AND ADDITIONAL REFRIGERANT CHARGE

Perform an air-tightness test for this package A/C. Check that there is no leakage from any of the connections.

Air and moisture in the refrigerant system may have undesirable effects as indicated below.

- pressure in the system rises
- operating current rises
- cooling (or heating) efficiency drops
- moisture in the refrigerant circuit may freeze and block capillary tubing
- water may lead to corrosion of parts in the refrigerant system

Therefore, the indoor unit and tubing between the indoor and outdoor unit must be leak tested and evacuated to remove any noncondensables and moisture from the system.

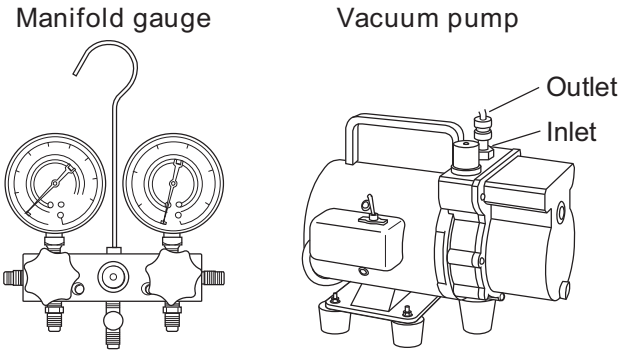

■ Air Purging with a Vacuum Pump (for Test Run) Preparation

Check that each tube (both liquid and gas tubes) between the indoor and outdoor units has been properly connected and all wiring for the test run has been completed. Remove the valve caps from both the gas and liquid service valves on the outdoor unit. Note that both liquid and gas tube service valves on the outdoor unit are kept closed at this stage.

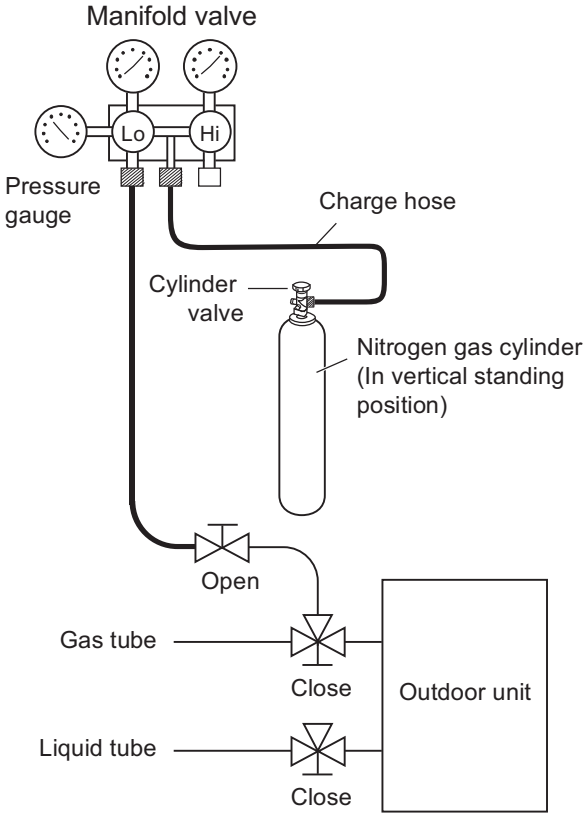

- The refrigerant charge at the time of shipment is only guaranteed sufficient for a tubing length of up to 30* m. The tubing may exceed this length, up to the maximum permitted length; however, an additional charge is necessary for the amount that the tubing exceeds 30* m. (No additional refrigerating machine oil is needed.)
  * 60, 71 types : 20 m

Leak Test

(1) With the service valves on the outdoor unit closed, remove the 6.35 mm flare nut and its bonnet on the gas tube service valve. (Save for reuse.)

(2) Attach a manifold valve (with pressure gauges) and dry nitrogen gas cylinder to this service port with charge hoses.

CAUTION

Use a manifold valve for air purging. If it is not available, use a stop valve for this purpose.
The □Hi□knob of the manifold valve must always be kept closed.

(3) Pressurize the system up to 4.15 MPa □42 kgf/cm²G□with dry nitrogen gas and close the cylinder valve when the gauge reading reaches 4.15 MPa □42 kgf/cm²G□.
Then, test for leaks with liquid soap.

CAUTION

To avoid nitrogen entering the refrigerant system in a liquid state, the top of the cylinder must be higher than the bottom when you pressurize the system. Usually, the cylinder is used in a vertical standing position.

(4) Do a leak test of all joints of the tubing (both indoor and outdoor) and both gas and liquid service valves. Bubbles indicate a leak. Wipe off the soap with a clean cloth after a leak test.

(5) After the system is found to be free of leaks, relieve the nitrogen pressure by loosening the charge hose connector at the nitrogen cylinder. When the system pressure is reduced to normal, disconnect the hose from the cylinder.

Evacuation

Be sure to use a vacuum pump that includes a function for prevention of back-flow, in order to prevent back-flow of ump oil into the unit tubing when the pump is stopped.

● Perform vacuuming of the indoor unit and tubing.
Connect the vacuum pump to the gas tube valve and apply vacuum at a pressure of □101kPa □□755 mmHg, 5 Torr□or below.
Continue vacuum application for a minimum of 1 hour after the pressure reaches □101kPa □□755 mmHg, 5 Torr□.

(1) Attach the charge hose end described in the preceding steps to the vacuum pump to evacuate the tubing and indoor unit. Confirm that the •Lo□knob of the manifold valve is open. Then, run the vacuum pump.

(2) When the desired vacuum is reached, close the •Lo□knob of the manifold valve and turn off the vacuum pump. Confirm that the gauge pressure is under □101 kPa □□755 mmHg, 5 Torr□after 4 to 5 minutes of vacuum pump operation.

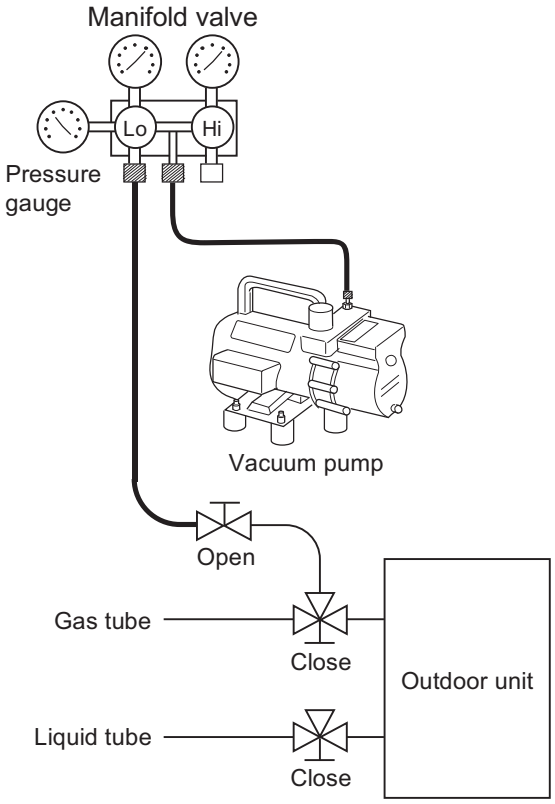

CAUTION

Use a cylinder specifically designed for use with R410A.

Charging Additional Refrigerant

- Charging additional refrigerant (calculated from the liquid tube length as shown in •Amount of additional refrigerant charge□) using the liquid tube service valve.
- Use a balance to measure the refrigerant accurately.
- If the additional refrigerant charge amount cannot be charged at once, charge the remaining refrigerant in liquid form by using the gas tube service valve with the system in Cooling mode at the time of test run.

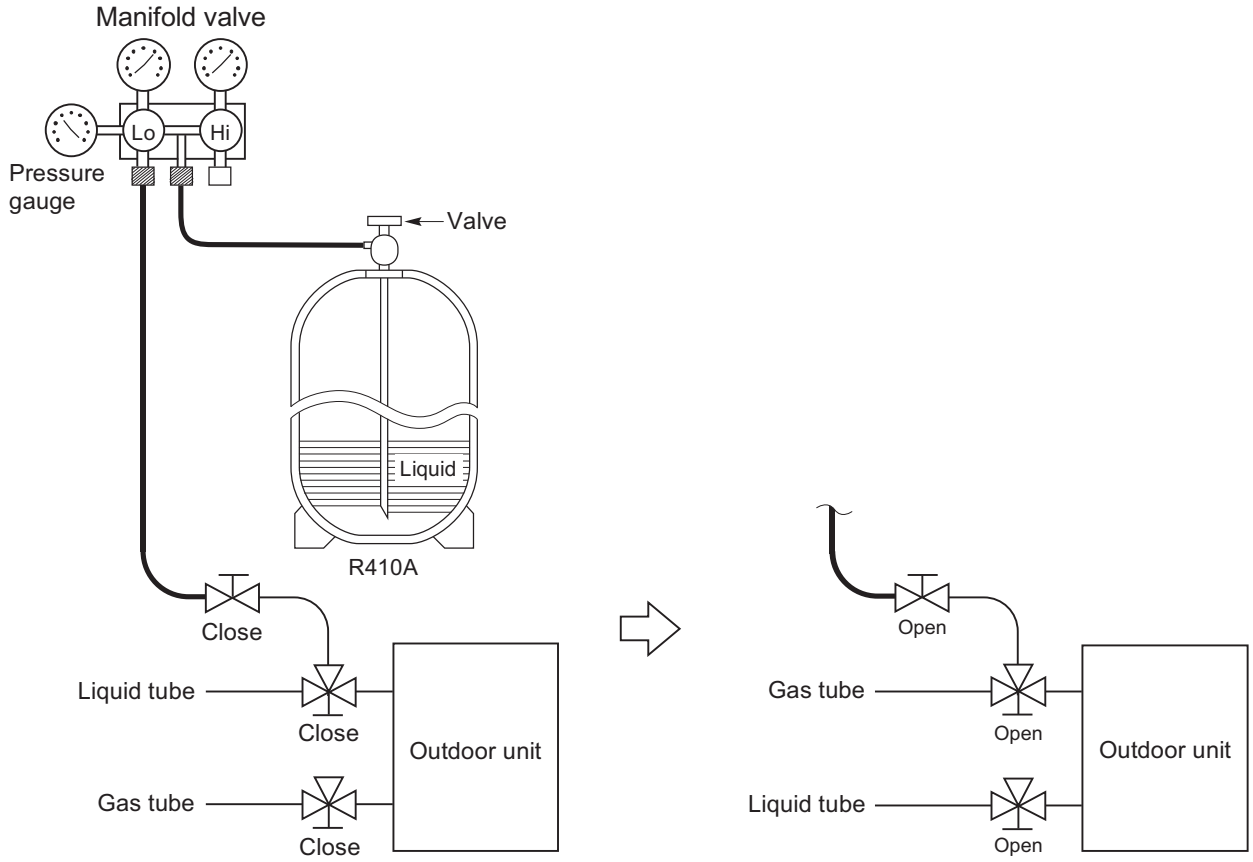

* If an additional refrigerant charge has been performed, list the refrigerant tubing length and amount of additional refrigerant charge on the product label (inside the panel).

Finishing the □ob

(1) With a hex wrench, turn the liquid tube service valve stem counterclockwise to fully open the valve.

(2) Turn the gas tube service valve stem counterclockwise to fully open the valve.

CAUTION

To avoid gas from leaking when removing the charge hose, make sure the stem of the gas tube is turned all the way out (□BACK SEAT□) position.

(3) Loosen the charge hose connected to the gas tube service port (7.94 mm) slightly to release the pressure, and then remove the hose.

(4) Replace the 7.94 mm flare nut and its bonnet on the gas tube service port and fasten the flare nut securely with an adjustable wrench or box wrench.
This process is very important to prevent gas from leaking from the system.

(5) Replace the valve caps at both gas and liquid service valves and fasten them securely.

ELECTRICAL WIRING

General Precautions on Wiring

(1) Before wiring, confirm the rated voltage of the unit as shown on its nameplate, then carry out the wiring closely following the wiring diagram.
(2) Provide a power outlet to be used exclusively for each unit and a circuit breaker for overcurrent protection should be provided in the exclusive line.
(3) To prevent possible hazards from insulation failure, the unit must be grounded.
(4) Each wiring connection must be done in accordance with the wiring system diagram.
Wrong wiring may cause the unit to disorder or become damaged.
(5) Do not allow wiring to touch the refrigerant tubing, compressor, or any moving parts of the fan.
(6) Unauthorized changes in the internal wiring can be very dangerous.
The manufacturer will accept no responsibility for any damage or malfunction that occurs as a result of such unauthorized changes.
(7) Regulations on wire diameters differ from locality to locality.
For field wiring rules, please refer to your LOCAL ELECTRICAL CODES before beginning.
You must ensure that installation complies with all relevant rules and regulations.
(8) To prevent malfunction of the air conditioner caused by electrical noise, care must be taken when wiring as follows:
- The remote control wiring and the inter-unit control wiring should be wired apart from the inter-unit power wiring.
- Use shielded wires for inter-unit control wiring between units and ground the shield on both sides.

(9) If the power supply cord of this appliance is damaged, it must be replaced by a repair shop designated by the manufacturer, because special-purpose tools are required.

Recommended Wire Length and Wire Diameter for Power Supply System

Outdoor unit

	(A) Power supply		Time delay fuse or circuit capacity
	Wire size	Max. length	
U-50PE1E5	2.5 mm²	29 m	16 A
U-60PEY1E5	2.5 mm²	19 m	20 A
U-71PEY1E5	2.5 mm²	19 m	20 A

Indoor unit

Type	(B) Power supply	Time delay fuse or circuit capacity
	2.5 mm²	
K1	Max. 150 m	10 - 16 A
U1, T2, F1, N1	Max. 130 m	10 - 16 A

Control wiring

(C) Inter-unit (between outdoor and indoor units) control wiring	(D) Remote control wiring	(E) Control wiring for group control
0.75 mm²(AWG #18) Use shielded wiring*1	0.75 mm²(AWG #18) Use shielded wiring	0.75 mm²(AWG #18) Use shielded wiring
Max. 1,000 m	Max. 500 m*2	Max. 200 m (Total)

NOTE

*1 With ring-type wire terminal.
*2 When (D) and (E) are used together with maximum length of 500 m for group control, and if the remote controller for the group control is wireless, the maximum length will be 400 m.

Wiring System Diagrams

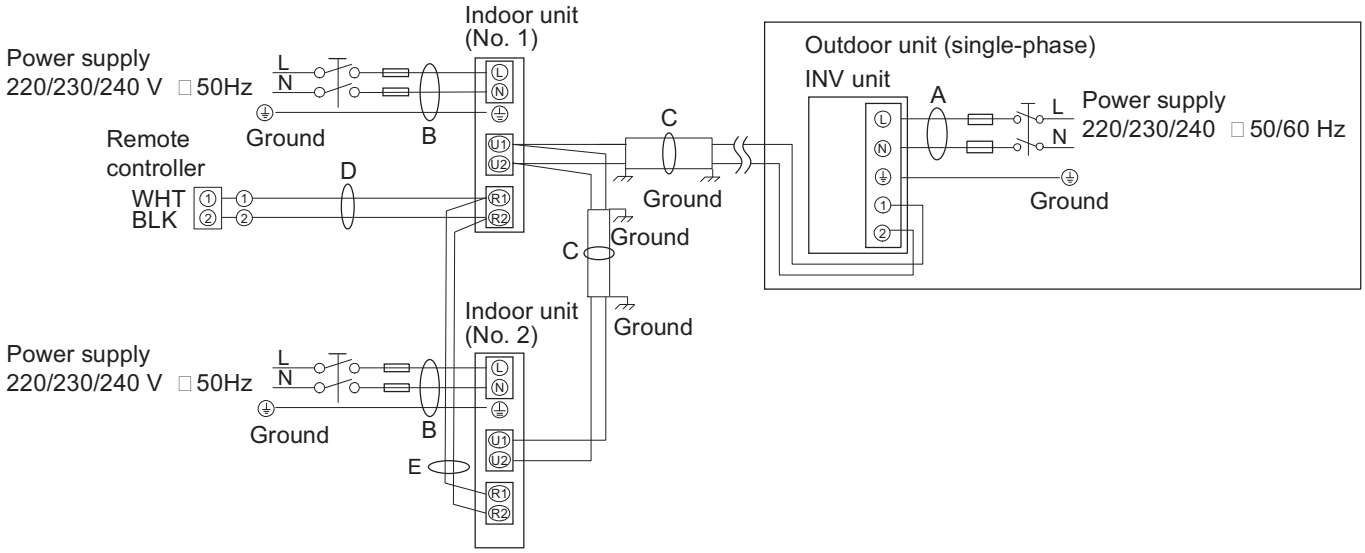

Outdoor Unit

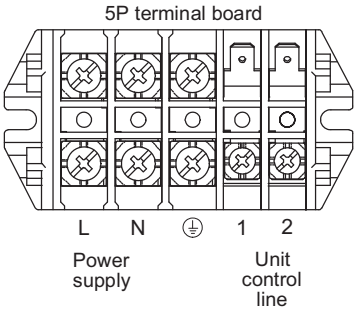

NOTE

(1) Refer to Section •Recommended Wire Length and Wire Diameter for Power Supply System□for the explanation of •A□, •B□, •C□, •D□and •E□in the above diagrams.

(2) The basic connection diagram of the indoor unit shows the terminal board, so the terminal boards in your equipment may differ from the diagram.

(3) Refrigerant Circuit (R.C.) address should be set before turning the power on.

(4) Regarding R.C. address setting, refer to the installation instructions supplied with the remote controller unit (Optional).
Auto address setting can be executed by remote controller automatically.
Refer to the Installation Instructions supplied with the remote controller (optional).

Wiring sample

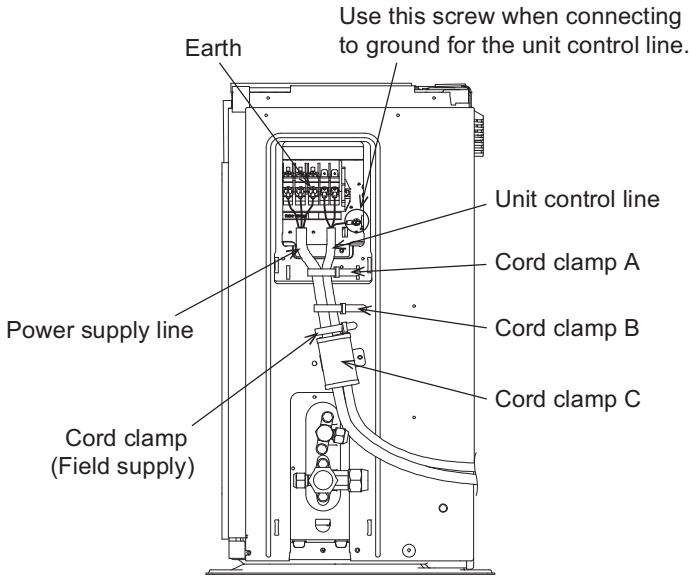

CAUTION

(1) When linking the outdoor units in a network, disconnect the terminal extended from the short plug from all outdoor units except any one of the outdoor units.
(When shipping: In shorted condition.)
For a system without link (no wiring connection between outdoor units), do not remove the short plug.

(2) Do not install the inter-unit control wiring in a way that forms a loop.

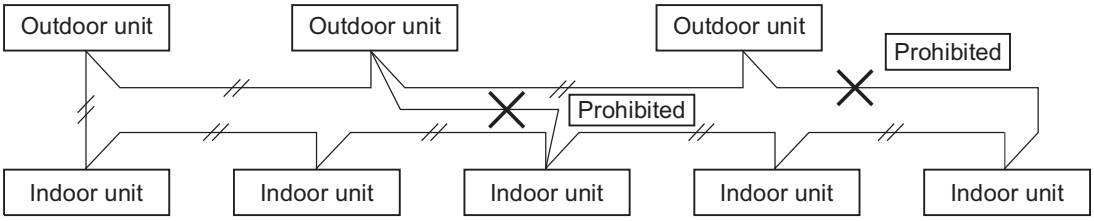

(3) Do not install inter-unit control wiring such as star branch wiring. Star branch wiring causes mis-address setting.

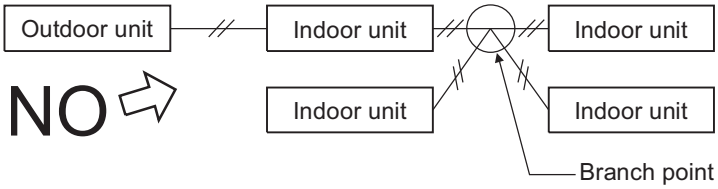

(4) If branching the inter-unit control wiring, the number of branch points should be 16 or fewer.

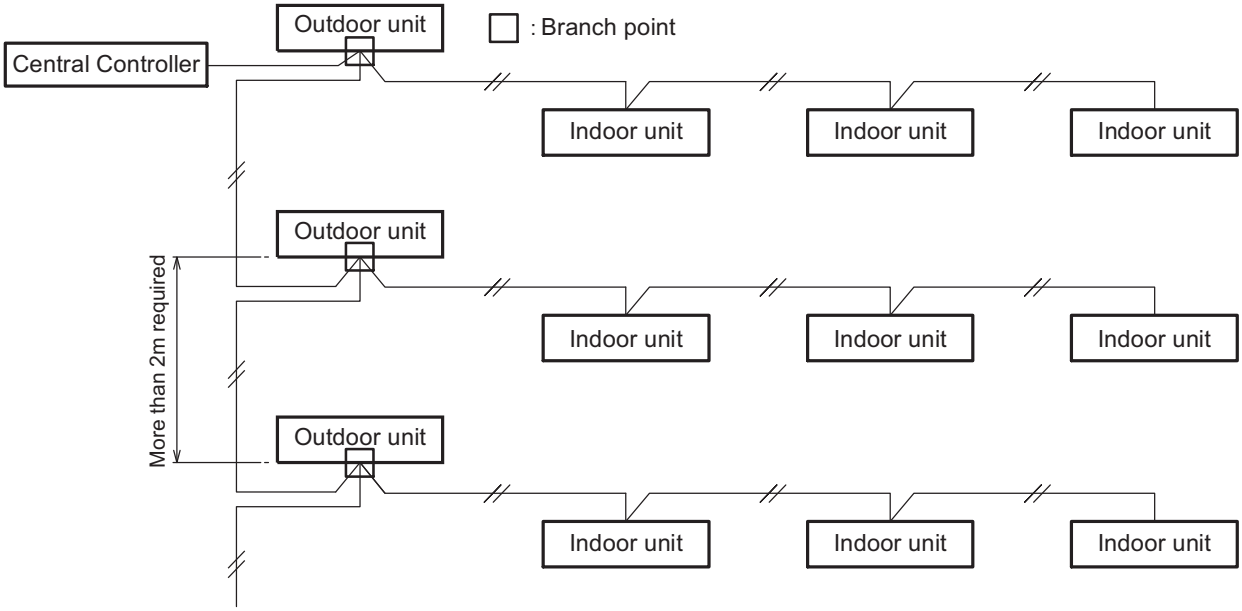

(5) Use shielded wires for inter-unit control wiring (c) and ground the shield on both sides, otherwise misoperation from noise may occur. Connect wiring as shown in Section □Wiring System Diagrams□.

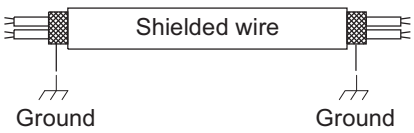

(6) • Use the standard power supply cables for Europe (such as H05RN-F or H07RN-F which conform to CENELEC (HAR) rating specifications) or use the cables based on IEC standard. (60245 IEC57, 60245 IEC66)
• Connecting cable between indoor unit and outdoor unit shall be approved polychloroprene sheathed 5 or 3 *1.5 mm^2 flexible cord. Type designation 60245 IEC 57 (H05RN-F, GP85PCP etc.) or heavier cord.

WARNING

Loose wiring may cause the terminal to overheat or result in unit malfunction.
A fire hazard may also occur. Therefore, ensure that all wiring is tightly connected.
When connecting each power wire to the terminal, follow the instructions on •How to connect wiring to the terminal□ and fasten the wire securely with the terminal screw.

How to connect wiring to the terminal

■ Air Purging with a Vacuum Pump (for Test Run) Preparation

(1) Cut the wire end with cutting pliers, then strip the insulation to expose the stranded wire about 10 mm and tightly twist the wire ends.

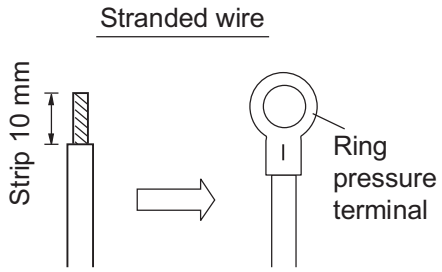

(2) Using a Phillips head screwdriver, remove the terminal screw(s) on the terminal board.

(3) Using a ring connector fastener or pliers, securely clamp each stripped wire end with a ring pressure terminal.

(4) Put the removed terminal screw through the ring pressure terminal and then replace and tighten the terminal screw using a screwdriver.

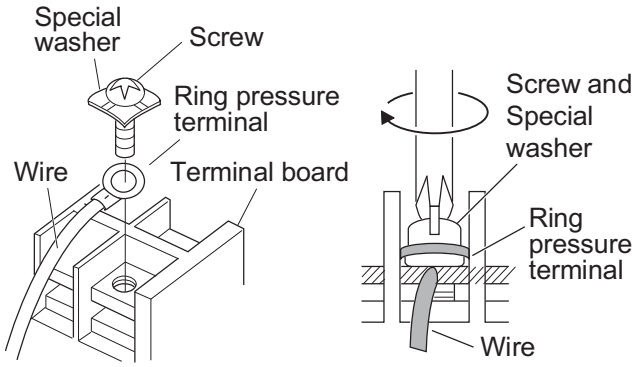

■ Assembling parts for outdoor unit cover

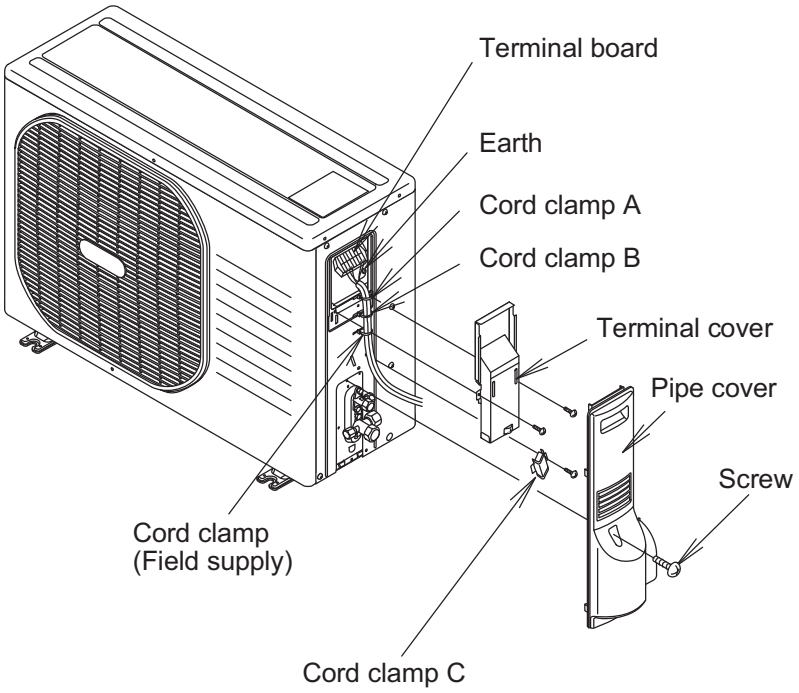

TEST RUN

Preparing for Test Run

● Before attempting to start the air conditioner, check the following:

(1) All loose matter is removed from the cabinet especially steel filings, bits of wire, and clips.

(2) The control wiring is correctly connected and all electrical connections are tight.

(3) The protective spacers for the compressor used for transportation have been removed. If not, remove them now.

(4) The transportation pads for the indoor fan have been removed. If not, remove them now.

(5) The power has been supplied to the unit for at least 5 hours before starting the compressor.
The bottom of the compressor should be warm to the touch and the crankcase heater around the feet of the compressor should be hot to the touch.

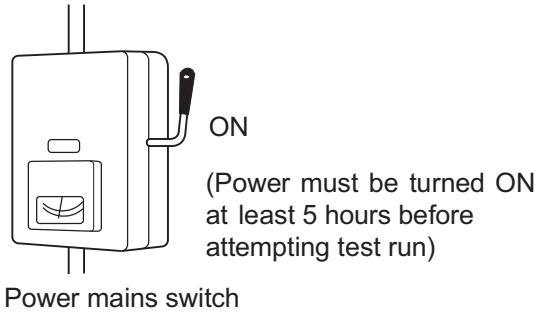

(6) Both the gas and liquid tube service valves are open.
If not, open them now.

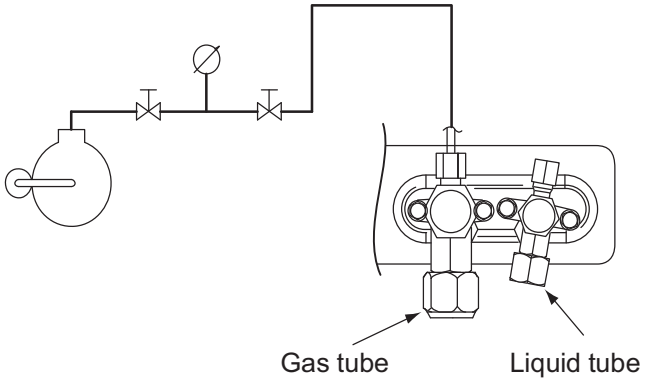

(7) Request that the customer be present for the test run.
Explain the contents of the Installation Instructions, and then have the customer actually operate the system.

(8) Be sure to give the Installation Instructions and warranty certificate to the customer.

(9) When replacing the control PCB, be sure to make all the same settings on the new PCB as were in use before replacement.
The existing EEPROM is not changed, and is connected to the new control PCB.

■ U1, T2, F1, N1 Types

Caution

- This unit may be used in a single-type refrigerant system where 1 outdoor unit is connected to 1 indoor unit, and also in a system where 1 outdoor unit is connected to multiple indoor units (maximum 2).
  * If multiple indoor units are used, also refer to section •System Control□
- The indoor and outdoor unit control PCB utilizes a semiconductor memory element (EEPROM).
  The settings required for operation were made at the time of shipment.
  Only the correct combinations of indoor and outdoor units can be used.
- This test run section describes primarily the procedure when using the wired remote controller.

Test Run Procedure

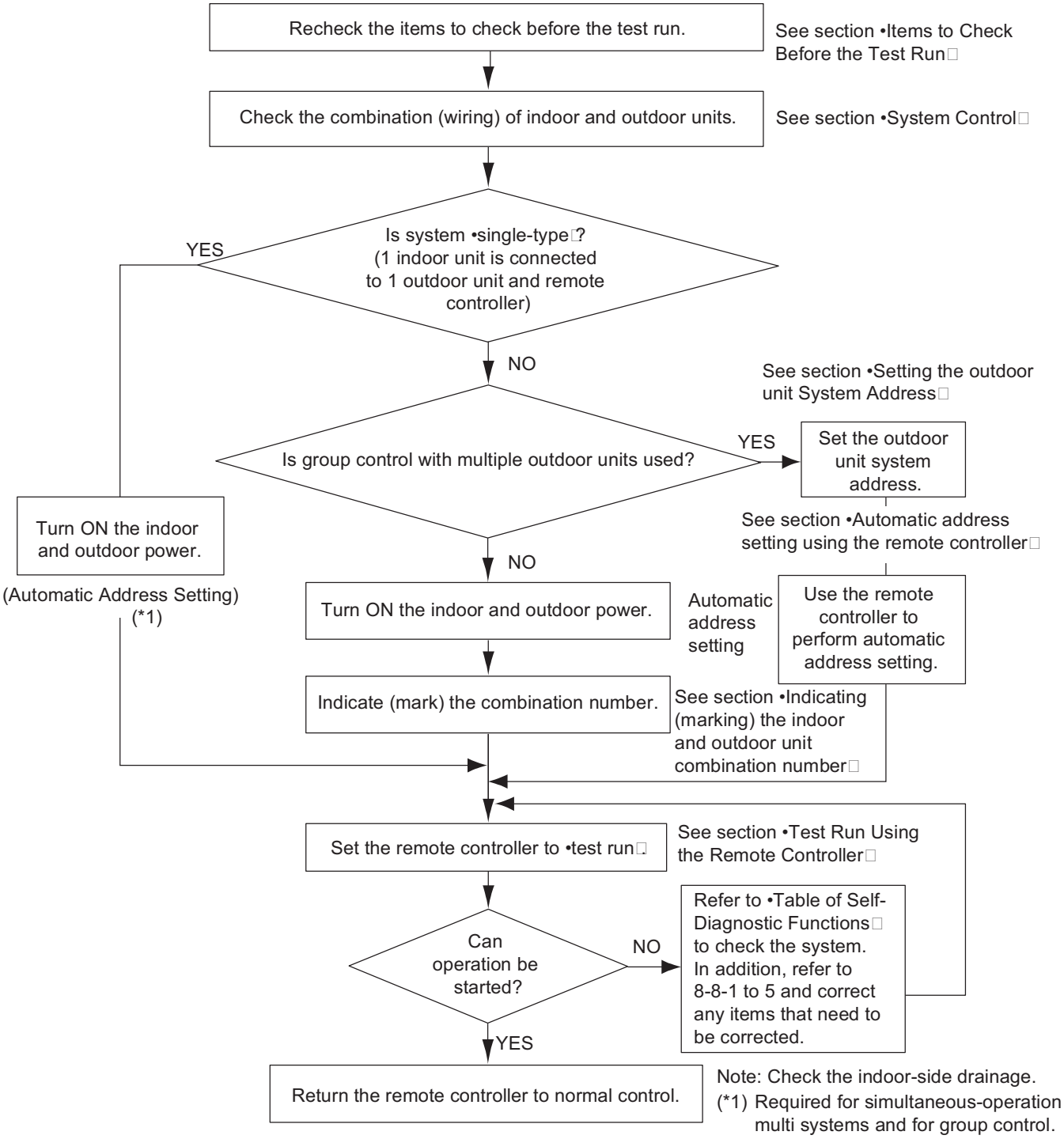

Note: Check the indoor-side drainage.
(*1) Required for simultaneous-operation multi systems and for group control.

Items to Check Before the Test Run

(1) Turn the remote power switch ON at least 12 hours in advance in order to energize the crankcase heater.
(2) Fully open the closed valves on the liquid-tube and gastube sides.

Test Run Using the Remote Controller

(1) Press and hold the remote controller button for 4 seconds or longer. Then press the button.

- •TEST□appears in the LCD display during the test run.
- Temperature control is not possible when test run mode is engaged.
  (This mode places a large load on the devices. Use it only when performing the test run.)

(2) Use either Heating or Cooling mode to perform the test run.

NOTE The outdoor unit will not operate for approximately 3 minutes after the power is turned ON or after it stops operating.

(3) If normal operation is not possible, a code appears on the remote controller LCD display.
Refer to the section •Table of Self-Diagnostic Functions and Corrections□and correct the problem.

(4) After the test run is completed, press the button again.
Check that •TEST□disappears from the LCD display.
(This remote controller includes a function that cancels test run mode after a 60-minute timer has elapsed, in order to prevent continuous test run operation.)

(5) For the test run of an inverter outdoor unit, operate the compressors for a minimum of 10 minutes (in order to check for open phase).
* When performing a test run using a wired remote controller, operation is possible without attaching the cassette-type ceiling panel. (•P09□will not be displayed.)

Precautions

- Request that the customer be present when the test run is performed.
  At this time, explain the Operating Instructions and have the customer perform the actual steps.
- Be sure to pass the manuals and warranty certificate to the customer.
- Check that the 220 □240 V AC power is not connected to the inter-unit control wiring connector terminal.
  * If 220 □240 V AC is accidentally applied, the indoor or outdoor unit control PCB fuse will blow in order to protect the PCB.
  Correct the wiring connections, then disconnect the 2P connectors that are connected to the PCB, and replace them with 2P connectors.
  If operation is still not possible after changing the brown connectors, cut off the jumper (outdoor unit : □P007) or the varistor (indoor unit) on the PCB. (Be sure to turn the power OFF before performing this work.)

Outdoor unit control PCB

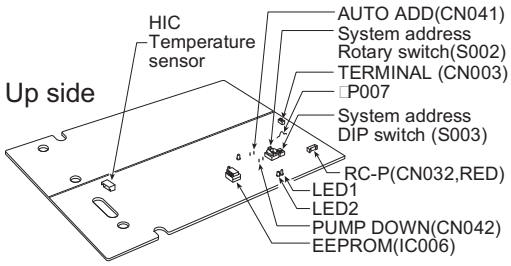

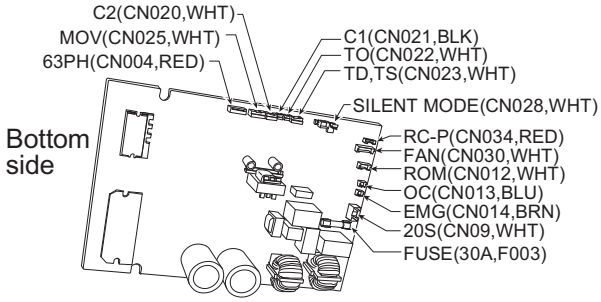

Indoor unit control PCB

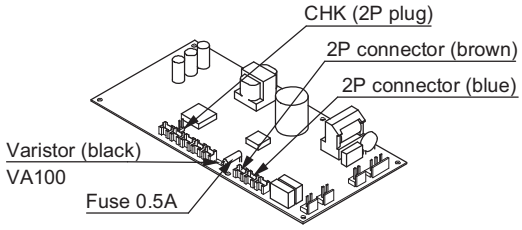

Table of Self-Diagnostic Functions and Corrections (U1, T2, F1, N1 Types)

Wired remote controller display	Indoor unit receiver lamp	Cause				Correction
		1:1 connection (single type)	Group connection	Simultaneous-operation multi system (flexible combination)	Control by main-sub remote controllers	
Nothing is displayed	Nothing is displayed	● Remote controller is not connected correctly. ● Indoor unit power is not ON.	● Remote controller is not connected with indoor unit correctly ● Indoor unit power is not ON.	● Same at left	● Same at left	Connect the remote controller correctly. Turn ON the indoor unit power.
E01 displayed	Operating lamp is blinking.	● Automatic address setting has not been completed. ● Inter-unit control wiring is cut or is not connected correctly. ● Remote controller is not connected correctly (remote controller receiving failure).	● Automatic address setting has not been completed. ● Inter-unit control wiring is cut or is not connected correctly. ● Remote controller is not connected with indoor unit correctly.	● Same at left	● Same at left	Check the remote controller and inter-unit control wiring. Perform automatic address setting.
E02 displayed		● Remote controller is not connected correctly (failure in transmission from remote controller to indoor unit).	● Remote controller is not connected with indoor unit correctly.	● Same at left	● Same at left	Connect the remote controller correctly.
E09 displayed		□□□□□□	□□□□□□	□□□□□□	● 2 remote controllers are set as the main remote controller.	Refer to section •Main-sub remote Control□, and make the correct settings.
E14 displayed		□□□□□□	□□□□□□	● Remote control communication wiring is cut or is not connected correctly.	● Same at left	Check the remote control communication wiring. Perform automatic address setting again.
E04 displayed	Standby lamp is blinking.	● Indoor-outdoor inter-unit wiring is not connected correctly.	● Same at left	● Same at left	● Same at left	Connect the wiring correctly.
E06 displayed			● Indoor-outdoor inter-unit wiring is cut or is not connected correctly.	● Same at left	● Same at left	Refer to section •System Control□, and make the correct settings.
E15 displayed		● Indoor unit capacity is too low.	● Same at left	● Same at left	● Same at left	Check that the total capacities of the indoor and outdoor units are appropriate.
E16 displayed		● Indoor unit capacity is too high.				
E20 displayed		● No serial signal is being received at all from the indoor units.				Check that the indoor unit power is ON, and that the inter-unit control wiring is connected correctly.
P05 displayed	Operation lamp and Standby lamp are blinking alternately.	● Reversed phase in the outdoor unit single-phase or open phase in the outdoor unit 3-phase power. ● Insufficient gas	● Reversed phase in the outdoor unit single phase or open phase in the 3-phase power at one of the outdoor units in the group.	● Reversed phase in the outdoor unit single-phase or open phase in the outdoor unit 3-phase power. ● CT sensor is disconnected or there is a problem with the circuit.	● Same at left	Reverse 2 phases of the outdoor unit 3-phase power and connect them correctly. Check that the CT sensor is not disconnected, and make sure it is inserted. Fill up the gas appropriately.
L02 displayed L13 displayed	Both the Operation lamp and Standby lamp are blinking together.	● Indoor-outdoor unit type mismatch.	● Same at left	● Same at left	□□□□	Check that the indoor and outdoor unit types are correct.
L07 displayed		□□□□□□	□□□□□□	● Remote control communication wiring is connected to the indoor unit, however it is set for individual operation.	● Same at left	Perform automatic address setting. (See section •System Control□.)
P09 displayed	Timer lamp and Standby lamp are blinking alternately.	● The indoor unit ceiling panel connector is not connected correctly.	● Ceiling panel connector at one of the indoor units in the group is not connected correctly.	● Indoor unit ceiling panel connector is not connected correctly.	● Same at left	Connect the indoor unit ceiling panel connector correctly.
P12 displayed		● Indoor unit DC fan trouble.	● DC fan trouble at one of the indoor units in the group.	● Indoor unit fan trouble.	● Same at left	Check whether the fan holder is loose. Check the wiring between the DC fan and the PCB.
P15 displayed	Operation lamp and Standby lamp are blinking alternately.	● No gas	● Same at left	● Same at left	□□□□	Check the refrigerant cycle (for gas leaks).

System Control

System control refers to the link wiring connection for control of simultaneous-operation multi systems, group control,
and mainsub remote controller control.

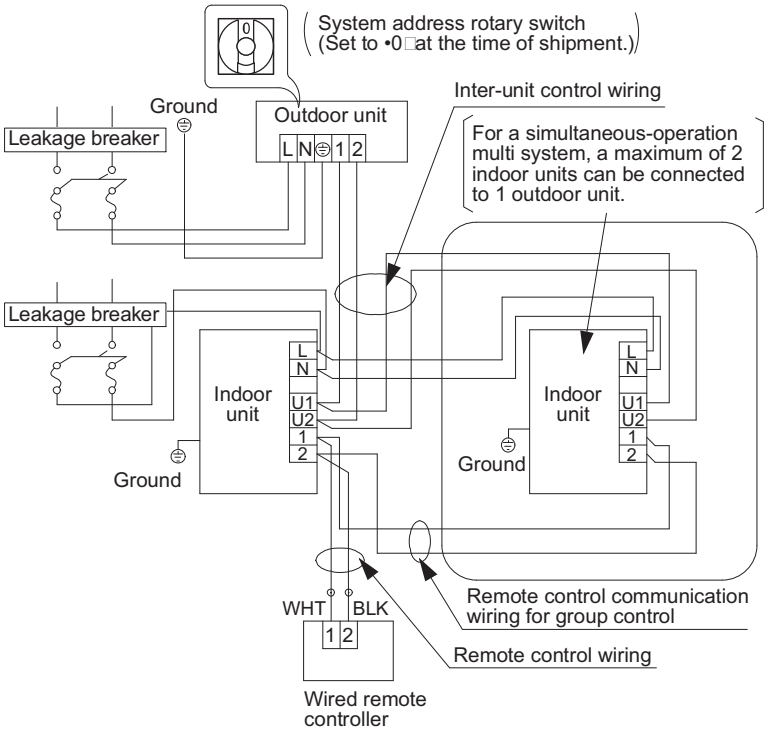

Basic wiring diagram 1

Single type and simultaneous-operation multi system

- Simultaneous-operation multi system

  Up to 2 (Twin) indoor units can be connected to 1 outdoor unit for operation.
  (However, coordinate the outdoor unit capacity and the total capacity of the indoor units.)
  (It is not possible to connect individual remote controllers for independent operation.)
- Be careful to avoid miswiring when connecting the wires. (Miswiring will damage the units.)

Basic wiring diagram 2

Group control (when a central control device is not used)

- Simultaneous-operation multi system

  Up to 2 (Twin) indoor units can be connected to 1 outdoor unit for operation.
  (However, coordinate the outdoor unit capacity and the total capacity of the indoor units.)
  (It is not possible to connect individual remote controllers for independent operation.)
  A maximum of 8 indoor units can be connected to 1 remote controller.
  When 2 indoor units are connected to each outdoor unit in the refrigerant system, set the system address (refrigerant tubing system address) before turning on the remote power switch.
  (Refer to section •Setting the outdoor unit system addresses.)
  (Set using the system address rotary switch on the outdoor unit control PCB.)

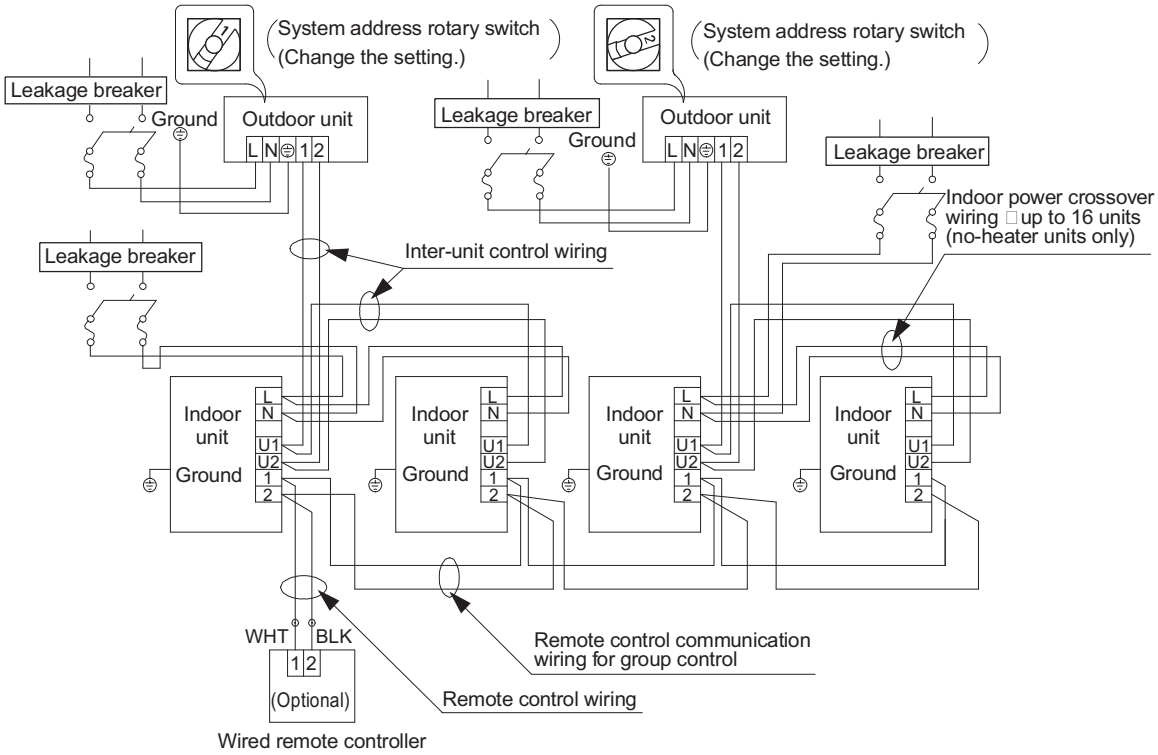

(Wiring procedure)

(1) Connect the remote controller to the indoor unit remote control wiring terminal board (1, 2). (Remote control wiring)

(2) Connect the indoor units (U1, U2) and the outdoor units (1, 2). Connect the other outdoor units and indoor units (with different refrigerant systems) in the same way. (Inter-unit control wiring) Connect the remote control communication wiring to the indoor units (U1, U2) for each refrigerant system. (Inter-unit control wiring)

(3) Connect the remote control communication wiring (2 wires) from the remote control wiring terminal board (1, 2) on the indoor unit (unit where the remote controller is connected) to the remote controller terminal board (1, 2) on the other indoor units. (Remote control communication wiring)

(4) Turn ON both the indoor and outdoor unit power and perform automatic address setting from the remote controller.
(For the automatic address setting procedure, refer to section •Automatic address setting using the remote controller□)

NOTE

* Models with auxiliary heaters cannot be used for crossover wiring of the indoor unit power wires.
(Use a pull box to divide the wiring.)
Be sure to use the indoor unit temperature sensor (body sensor) when using this control. (Status at shipment.)

Setting the outdoor unit system addresses

For basic wiring diagram 2 (Set the system addresses: 1, 2, 3...)

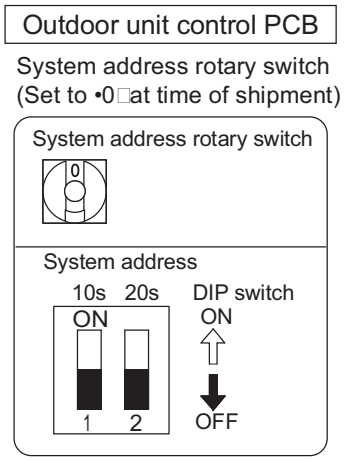

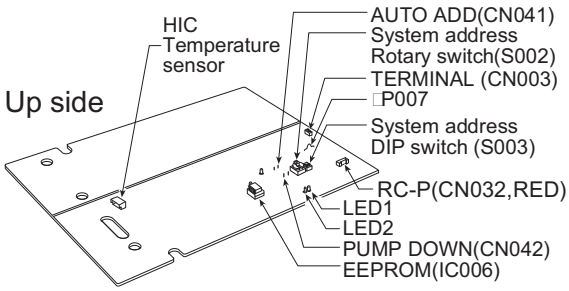

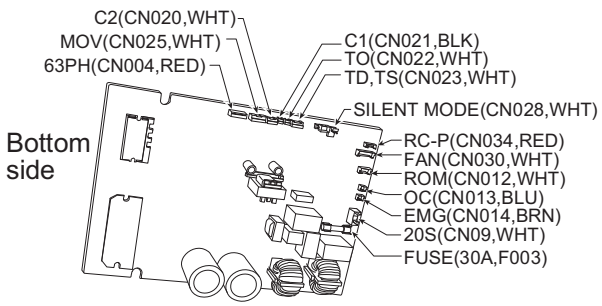

System address No.	System address 10s digit (2P DIP switch)	System address 1s place (Rotary switch)
0 Automatic address (Setting at shipment = •0□)	Both OFF ON 1 2 ON ⇧ ⬇ OFF	•0□setting
1 (If outdoor unit is No. 1)	Both OFF ON 1 2 ON ⇧ ⬇ OFF	•1□setting
2 (If outdoor unit is No. 2)	Both OFF ON 1 2 ON ⇧ ⬇ OFF	•2□setting
11 (If outdoor unit is No. 11)	10s digit ON ON 1 2 ON ⇧ ⬇ OFF	•1□setting
21 (If outdoor unit is No. 21)	20s digit ON ON 1 2 ON ⇧ ⬇ OFF	•1□setting
30 (If outdoor unit is No. 30)	10s digit and 20s digit ON ON 1 2 ON ⇧ ⬇ OFF	•0□setting

Automatic address setting using the remote controller

When the outdoor unit shown in •Basic wiring diagram 2 is used for group control of multiple units, use the remote controller to perform automatic address setting. (During automatic address setting, •SETTING blinks on the remote controller display.)

- Press the remote controller timer time ▲ button and 🔧 button simultaneously. (Hold for 4 seconds or longer.)
  Then press the SET button. (Item code •AA appears: All systems automatic address setting.)
  (Automatic address setting is performed in sequence for all outdoor units from No. 1 to No. 30.
  When automatic address setting is completed, the units return to normal stopped status.)
- To select each refrigerant system individually and perform automatic address setting, press the remote controller timer time ▲ button and 🔧 button simultaneously. (Hold for 4 seconds or longer.)
  Then press either of the temperature setting ▲ / ▼ buttons.
  (Item code •A1 appears: Individual system automatic address setting)
  Use either the UNIT or button to select the outdoor unit to perform automatic address setting for.
  (R.C.1 is displayed.) Then press the SET button. (Automatic address setting is performed for refrigerant system 1.)
  When automatic address setting for system 1 is completed, the system returns to normal stopped status.
  Again press the remote controller timer time ▲ button and the 🔧 button simultaneously.
  Then in the same way as above (use the UNIT button to display •R.C.2), select the next system and perform automatic address setting.

Indicating (marking) the indoor and outdoor unit combination number

Indicate (mark) the number after automatic address setting is completed.

(1) So that the combination of each indoor unit can be easily checked when multiple units are installed, ensure that the indoor and outdoor unit numbers correspond to the system address number on the outdoor unit control PCB, and use a magic marker or similar means which cannot be easily erased to indicate the numbers in an easily visible location on the indoor units (near the indoor unit nameplates).

Example: (Outdoor) 1 - (Indoor) 1, 2
(Outdoor) 2 - (Indoor) 1, 2

(2) These numbers will be needed for maintenance.
Be sure to indicate them.

* Use the remote controller to check the addresses of the indoor units.
Press and hold the 🔧 button and button for 4 seconds or longer (simple settings mode).
Then press the UNIT button and select the indoor address.
(Each time the button is pressed, the address changes as follows: 1-1, 1-2, 2-1, 2-2, ...)
The indoor unit fan operates only at the selected indoor unit.
Confirm that correct fan is operating, and indicate the address on the indoor unit.
Press the 🔧 button again to return to the normal remote controller mode.
For details, refer to the separate manual.

Main-sub remote controller control

Control using 2 remote controller

Main-sub remote controller control refers to the use of 2 remote controllers to control 1 or multiple indoor units.
(A maximum of 2 remote controllers can be connected.)

● Connecting 2 remote controllers to control 1 indoor unit

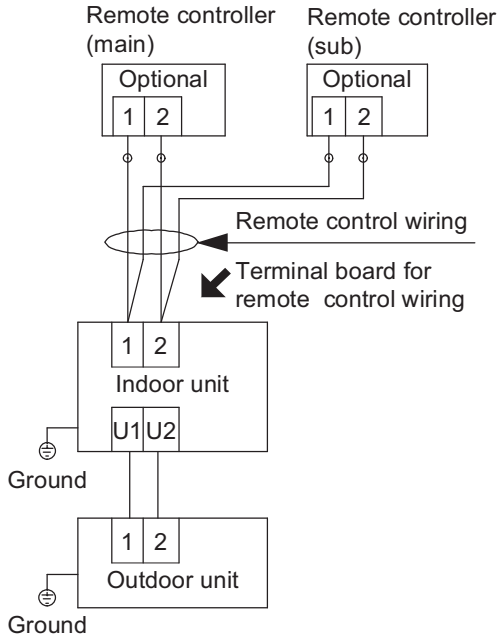

● Connecting 2 remote controllers to control a simultaneous-operation multi system

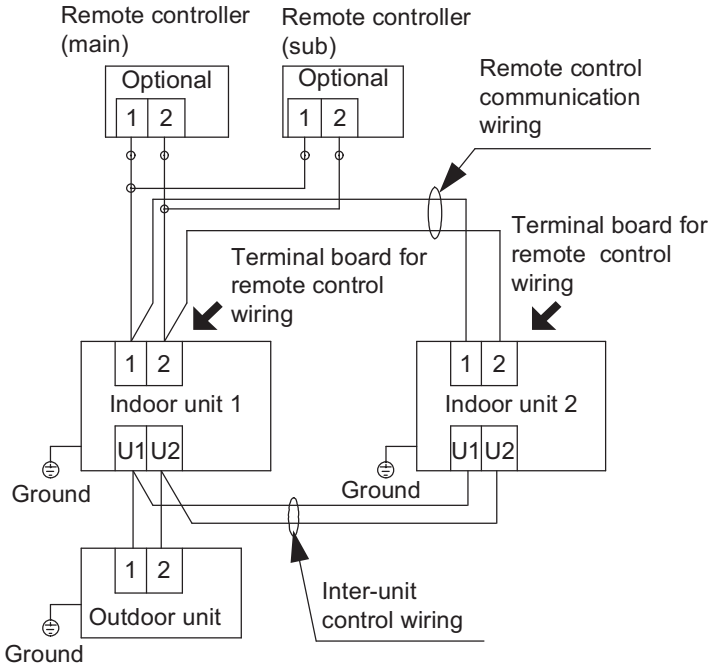

● Remote controller setting mode

To set the remote controller main/sub setting or change the sensor, follow the steps below.

(1) Press both [ ] and [SET] buttons on the remote controller for more than 4 seconds together.

(2) Select CODE No. with [▲] / [▼] (🌡) buttons.

(3) Change DATA with [▲] / [▼] (TIMER) buttons.

(4) Press [SET]. Finally, press [🔧].

* DATA is memorized in the RCU. (DATA setting will not be changed even when the power is turned off.)

* Make sure to set [Normal] for RCU. CK.

CODE ITEM	ITEM	DATA	
		0000	0001
01	RCU. Main/Sub	Sub	Main
02	Clock display	24 hours	12 hours (AM/PM)
08	RCU. CK	RCU. CK	Normal
0A	Room temperature sensor	Main unit	RCU

■ K1 Type

Caution

- This unit may be used in a single-type refrigerant system where 1 outdoor unit is connected to 1 indoor unit, and also in a system where 1 outdoor unit is connected to multiple indoor units (maximum 2).
  * If multiple indoor units are used, also refer to section •System Control□for K1 type.
- The indoor and outdoor unit control PCB utilizes a semiconductor memory element (EEPROM).
  The settings required for operation were made at the time of shipment.
  Only the correct combinations of indoor and outdoor units can be used.

Test Run Procedure

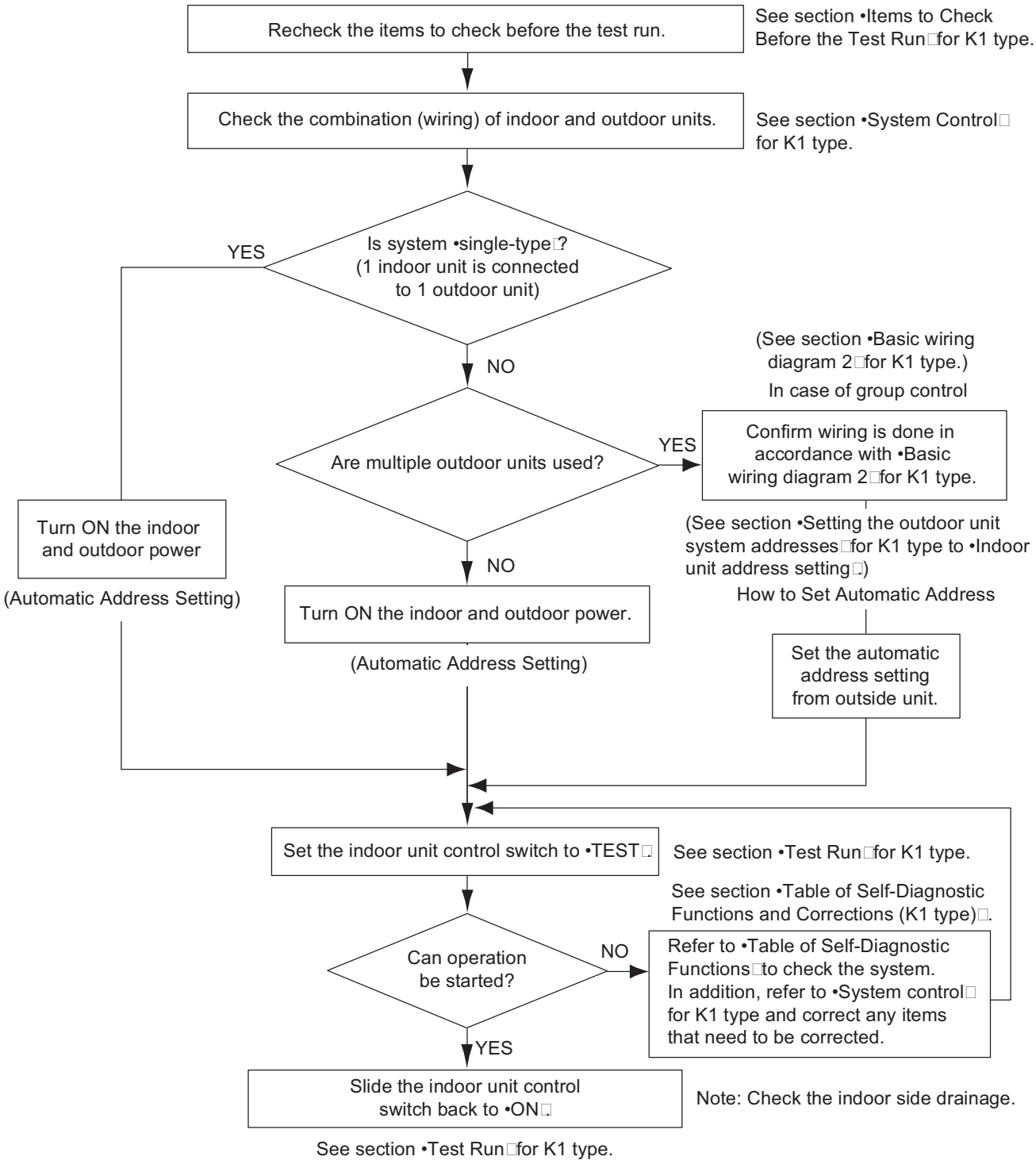

Items to Check Before the Test Run

(1) Turn the remote power switch ON at least 12 hours in advance in order to energize the crankcase heater.
(2) Fully open the closed valves on the liquid tube and gas tube sides.

Preparation for Test Run

Switching the temperature sensor

- Temperature sensors are contained in the indoor unit and wireless remote controller.
  One or the other of the temperature sensors is used for operation.
- If (body sensor) appears on the LCD display of the wireless remote controller, then the indoor unit body sensor is used for operation.
  To switch to the remote controller sensor, open the remote controller cover and press the SENSOR button once.
  The (body sensor) display disappears and the remote control sensor is used for operation.

NOTE

- Even if the remote controller sensor is selected, the sensor will be automatically switched to the indoor unit body sensor if no temperature signal has been received from the remote controller for 10 minutes.
  Install the remote controller in a position where the signal can be reliably received by the unit.
- When group control is engaged, be sure to use the body sensor.

Using the remote controller

- Face the remote controller toward the receiver (on the main unit).

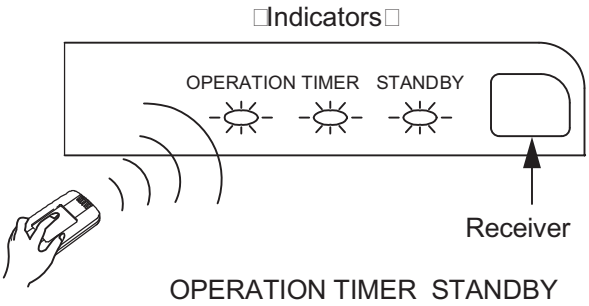

- The signal can be received up to a distance of approximately 8 m.
  Use this distance as a guide.
  This distance may vary somewhat depending on the battery capacity and other factors.
- Be sure that there are no objects between the remote controller and the receiver which may block the signal.
- The unit beeps when a signal is received correctly. (For operation start only, the unit beeps twice.)
- Do not drop, throw, or wash the remote controller.
- Do not place the remote controller in locations exposed to direct sunlight or nearby a stove.

Test Run

Using the control unit

(1) Change the indoor control unit switch from “ON” → “TEST”.
(The outdoor unit will not operate for 3 minutes after the power is turned ON and after operation is stopped.)

(2) All the indicator lamps blink while the test run is in progress.

(3) Temperature control is not possible during the test run.

(4) If correct operation is not possible, the trouble will be indicated by the indicator lamps.
Refer to •Table of Self-Diagnostic Functions and Corrections (K1 type)□and correct the problem.

(5) After the test is completed, change the control unit switch from “TEST” → “ON”.
Confirm that the indicator lamps have stopped blinking. (A function is included which cancels the test run after a 60-minute timer has elapsed, in order to prevent continuous test run operation.)

Indoor control unit switch

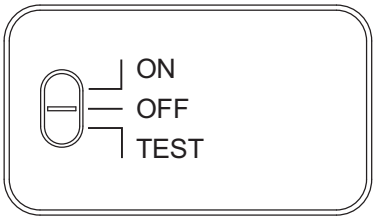

Indicator lamps

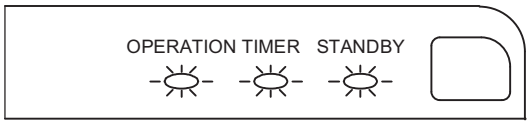

NOTE

- This mode places a large load on the devices. Use it only for performing test runs.
- A test run is not possible if the power is turned ON with the switch in the TEST position.
  After the power has been turned ON, change the switch once to ON or OFF, then switch it back to the TEST position.

Precautions

- Request that the customer be present when the test run is performed.
  At this time, explain the Operating Instructions and have the customer perform the actual steps.
- Be sure to pass the manuals and warranty certificate to the customer.
- Check that the 220 □240 V AC wiring is not connected to the inter-unit control wiring connector terminal.
  * If 220 □240 V AC is accidentally applied, the indoor or outdoor unit control PCB fuse (0.5 A for both indoor and outdoor units) will blow in order to protect the PCB.
    Correct the wiring connections, then disconnect the 2P connectors (indoor: blue) (outdoor: blue, serial 1) that are connected to the PCB, and replace them with 2P connectors (indoor: brown) (outdoor: brown, serial 2).
    If operation is still not possible after changing the brown connectors, cut off the jumper (outdoor unit : □P007) or the varistor (indoor unit) on the PCB. (Be sure to turn the power OFF before performing this work.)

Outdoor unit control PCB

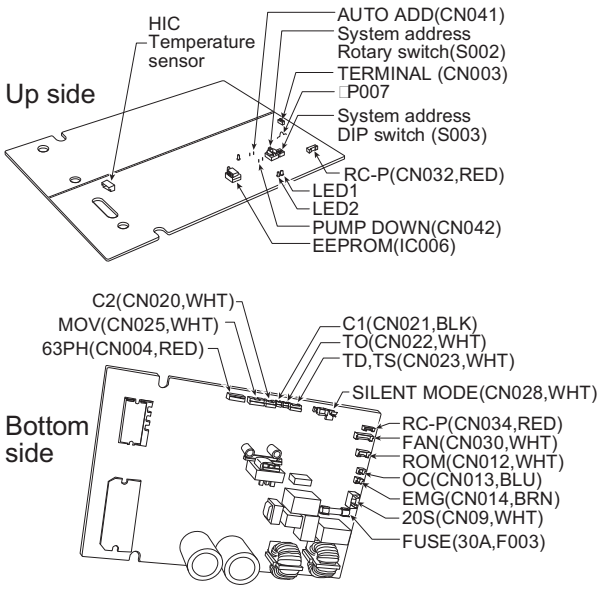

Indoor unit control PCB

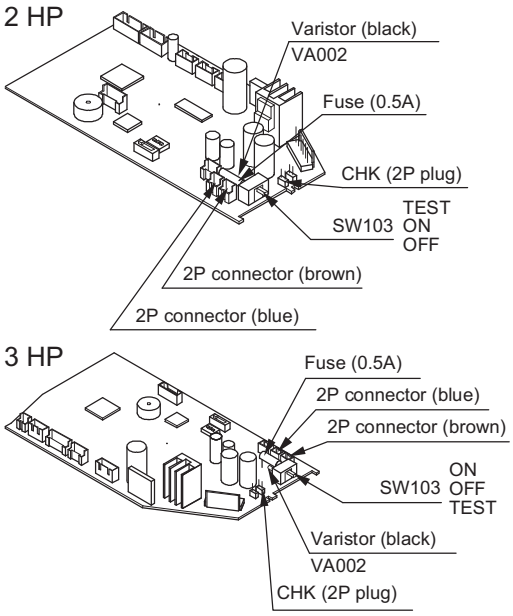

Table of Self-Diagnostic Functions and Corrections (K1 Type)

Wired remote controller display (Field supply)	Indoor unit receiver lamp	Cause		Correction
		1:1 connection (Single type)	Group connection (Simultaneous multi system)	
Nothing is displayed	Nothing is displayed	● Indoor operation switch is OFF. ● Indoor unit power is not ON.	● Same at left	● Set the indoor operation switch ON. ● Turn ON the indoor unit power.
E01 displayed	Operating lamp is blinking.	● Automatic address setting has not been completed. ● Inter-unit control wiring is cut or is not connected correctly.	● Same at left	● Check the inter-unit control wiring. ● Perform automatic address setting (See section •System Control for K1 type.)
E14 displayed		□ □ □ □ □ □	● Remote control communication wiring is cut or is not connected correctly.	● Check the remote control communication wiring. ● Perform automatic address setting again.
E04 displayed	Standby lamp is blinking.	● Indoor-outdoor inter-unit wiring is not connected correctly.	● Same at left	● Connect the wiring correctly.
E06 displayed		□ □ □ □ □ □	● Inter-unit control wiring is cut or is not connected correctly.	● Refer to •System Control for K1 type, and make the correct settings.
E15 displayed		● Indoor unit capacity is too low.	● Same at left	● Check that the total capacities of the indoor and outdoor units are appropriate.
E16 displayed		● Indoor unit capacity is too high.	● Same at left	● Reverse 2 phases of the outdoor unit 3-phase power and connect them correctly.
P05 displayed	Operation lamp and Standby lamp are blinking alternately.	● Reversed phase in the outdoor unit single-phase or open phase in the outdoor unit 3-phase power.	● Same at left	● Connect the units correctly.
L02 displayed	Both the Operation lamp and Standby lamp are blinking together.	● Indoor-outdoor unit type mismatch.	● Same at left	● Connect the units correctly
L13 displayed		● Indoor-outdoor units are not setting correctly.	● Same at left	● Connect the units correctly
L04 displayed		□ □ □ □ □ □	● Outdoor unit address is duplicated.	● Connect the units correctly.
L07 displayed		□ □ □ □ □ □	● Remote control communication wiring is connected to the indoor unit, however, it is set for individual operation.	● Perform automatic address setting (See section •System Control for K1 type).
P15 displayed	Operation lamp and Standby lamp are blinking alternately.	● No gas	● Same at left	● Check the refrigerant cycle (for gas leaks).

System Control

System control refers to the link wiring connection for control of simultaneous-operation multi systems, group control, and mainsub remote controller control.

Basic wiring diagram 1
Single type and simultaneous-operation multi system

- Simultaneous-operation multi system
  Up to 2 (Twin) indoor units can be connected to 1 outdoor unit for operation.
  (However, coordinate the outdoor unit capacity and the total capacity of the indoor units.)
  (It is not possible to connect individual remote controllers for independent operation.)
- Be careful to avoid miswiring when connecting the wires. (Miswiring will damage the units.)

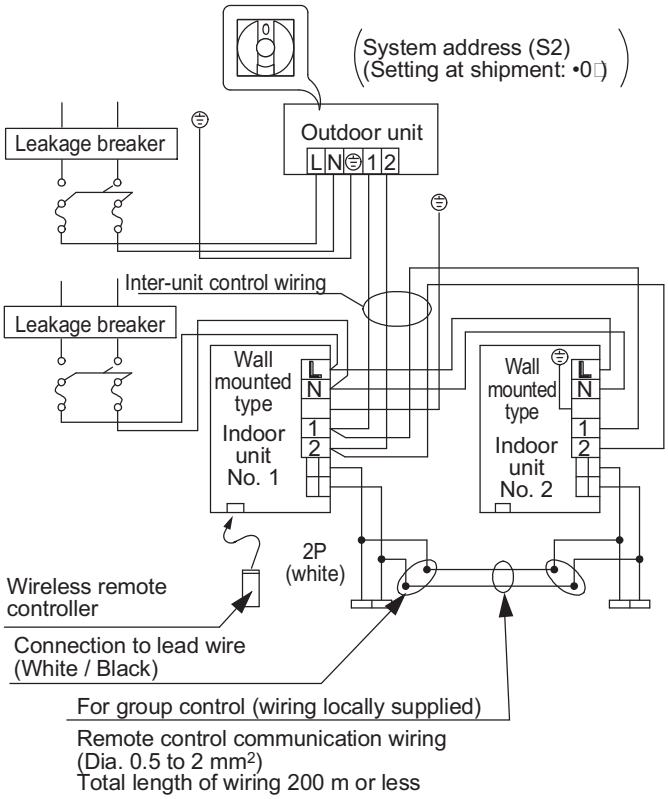

(Using a wired remote controller with a single-type system)
1. Wall mounted units do not include a terminal board for connecting a remote controller.
2. To connect the remote controller, a remote controller cord is required.

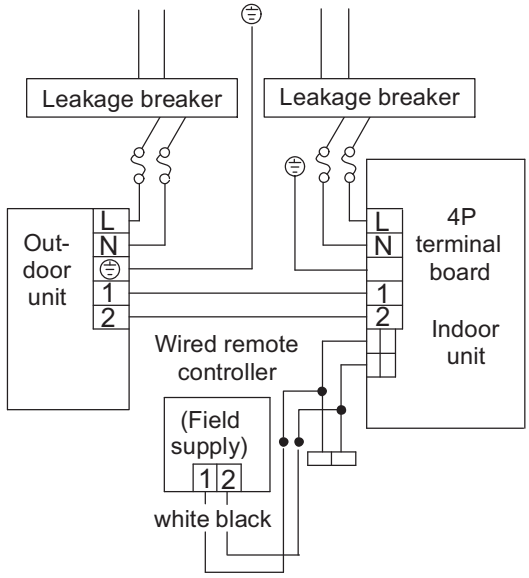

* When using wall mounted units in a simultaneous-operation multi system, connect the remote control communication wiring to the remote controller connector (2P) on the main unit, as shown in the diagram.

(Wiring procedure)

(1) Set the No. 1 wall mounted indoor unit so that it can be operated by the wireless remote controller.
(This is set at the time of shipment.)
On the indoor unit control PCBs, set the No. 2 and following wall mounted units to the sub remote controller.
(Refer to section •Indoor unit remote controller main-sub setting for K1 type.)

(2) Connect the crossover wiring to the lead wires (white/black) that extend out from the remote controller connectors of the No. 1 indoor unit and other wall mounted indoor units (as shown in Basic wiring diagram 1).
Connect the crossover wiring to 1 and 2 on the remote control wiring terminal board for units (4-way, ceilingmounted, etc.) other than the No. 1 indoor unit.

(3) Connect the inter-unit control wiring to 1 and 2 on the No. 1 indoor unit terminal board, and to 1 and 2 on the outdoor unit terminal board. Also connect the inter-unit control wiring between the indoor units.

(4) When the indoor and outdoor unit power is turned ON, automatic address setting is performed (when there is only 1 outdoor unit or when the system address is •0).

NOTE

* If the system address is •0, automatic address setting is performed when the power is turned ON (in the case shown in Basic wiring diagram 1).
This requires approximately 4 5 minutes (when the outdoor / indoor unit ratio is 1:1 as shown in basic wiring diagram 1). During automatic address setting, LED 1 and 2 on the outdoor unit control PCB blink alternately. These LED turn OFF when automatic address setting is completed.

Basic wiring diagram 2

Group control (when a central control device is not used)

● A maximum of 8 indoor units can be connected to a single remote controller.

Example: In a refrigerant system where 2 or 3 indoor units are connected to 1 outdoor unit, set the new system address (refrigerant system address) before turning ON the remote power switch.
(Refer to section •Setting the outdoor unit system addresses□for K1 type.)
(Set using the system address black rotary switch on the outdoor unit control PCB.)

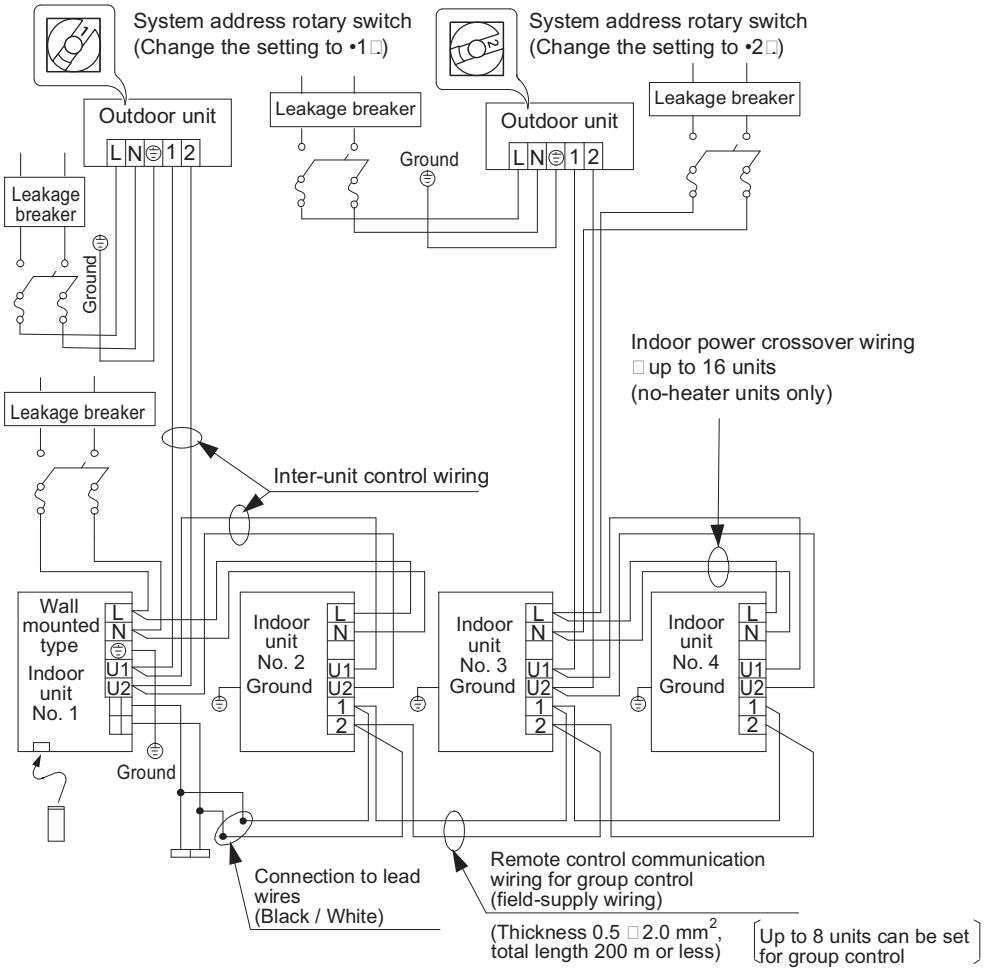

1. Wall mounted units do not include a terminal board for connecting a remote controller. 2. For group control of wall mounted units, connect the remote control communication wiring to the remote controller connector (2P) on the main unit, as shown in the diagram.

(Wiring procedure)

(1) Set the No. 1 wall mounted indoor unit so that it can be operated by the wireless remote controller.
(This is set at the time of shipment.)
On the indoor unit control PCBs, set the No. 2 and following wall mounted units to the sub remote controller.
(Refer to section •Indoor unit remote controller main-sub setting□for K1 type.)

(2) Connect the crossover wiring to 1 and 2 on the remote control wiring terminal boards of the No. 1 indoor unit and the other indoor units (as shown in Basic wiring diagram 2).

(3) Connect the inter-unit control wiring to 1 and 2 on the No. 1 indoor unit terminal board, and to 1 and 2 on the outdoor unit terminal board. Connect the wiring in the same way from the other outdoor units to U1 and U2 on the indoor units terminal boards (different refrigerant system).

(4) Perform automatic address setting from the outdoor unit. (For the automatic address setting procedure, refer to section •Automatic address setting from the outdoor unit□for K1 type.)

NOTE

* Models with auxiliary heaters cannot be used for •crossover wiring□of the indoor unit power wires.
(Use a pull box to divide the wiring.)

* Be sure to use the indoor unit temperature sensor (body sensor) when using this control. (Status at shipment)

Setting the outdoor unit system addresses

For basic wiring diagram 2 (Set the system addresses: 1, 2,...)

Outdoor unit control PCB

System address rotary switch
(Set to •0□at time of shipment)

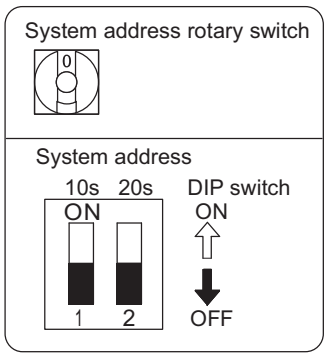

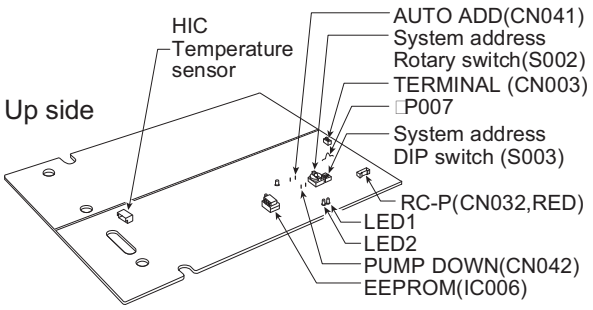

System address No.	System address 10s digit (2P DIP switch)	System address 1s place (Rotary switch)
0 Automatic address (Setting at shipment = •0□)	Both OFF	•0□setting
1 (If outdoor unit is No. 1)	Both OFF	•1□setting
2 (If outdoor unit is No. 2)	Both OFF	•2□setting
11 (If outdoor unit is No. 11)	10s digit ON	•1□setting
21 (If outdoor unit is No. 21)	20s digit ON	•1□setting
30 (If outdoor unit is No. 30)	10s digit and 20s digit ON	•0□setting

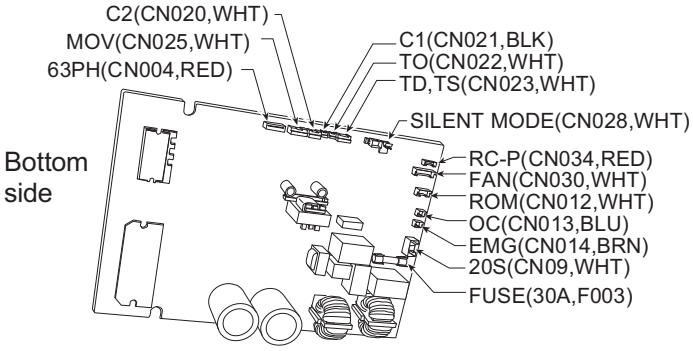

Automatic address setting from the outdoor unit

When there are multiple outdoor units as shown in basic wiring diagram 2

- If the power can be turned ON separately for the indoor and outdoor units in each system:
  The indoor unit addresses can be set without running the compressor.
- Be sure to use a jig for short-circuiting.

(1) Turn ON the indoor and outdoor unit power for refrigerant system 1.
- Short-circuit the AUTO ADD (CN041) pin for 1 second or longer at the outdoor unit where the power was turned ON.

↓

Communication for automatic address setting begins. LED 1 and 2 on the outdoor unit control PCB blink alternately, and turn OFF when address setting is completed.

↓ □Approximately 4 □5 minutes are required.□

(2) Next, turn ON the power only at the indoor and outdoor units in a different system.
- Short-circuit the AUTO ADD (CN041) pin for 1 second or longer on the outdoor unit.

↓

LED 1 and 2 on the outdoor unit control PCB blink alternately, and turn OFF when address setting is completed.
Repeat the same procedure for each system and complete automatic address setting.

↓

(3) Operation using the remote controller is now possible.

Indoor unit remote controller main-sub setting

- When multiple wall mounted indoor units are installed for group control in a simultaneous-operation multi system, set the control PCB at the No. 2 and following wall mounted units to •Sub remote control.
  If a wired remote controller is used, set the wired remote controller to •Sub.
  If 2 wireless remote controllers are used, set the wireless PCB (DIP switch) on the second remote controller to •Sub.

Indoor unit address setting

- If multiple single-type units are installed in the same room, the addresses can be set to prevent signal interference. By coordinating the numbers of the indoor unit (wireless PCB) and remote controller addresses, up to 6 indoor units can be controlled independently by their respective remote controllers.
  Independent control is not possible when a simultaneousoperation multi system is used.
- Checking the addresses
  Press the remote controller address button to display the current address on the remote controller display.
  If this address matches the indoor unit (wireless PCB) address, the buzzer will sound.
  (If ALL is set, the buzzer will always sound.)
  If ALL is set, operation is possible regardless of the indoor unit address.
  Point the remote controller toward the receiver (indoor unit) that you wish to operate, and send the operation signal.
- Remote controller address setting
  Press and hold the address button for 4 seconds or longer to display the address on the remote controller display.
  The current address starts blinking.
  The address changes each time the remote controller address button is pressed: ALL → 1 → 2 → 3 → ... → 6.
  Set the address to match the remote controller you wish to operate.
  When the SET button is pressed, the address stops blinking and displays for 5 seconds.
  The buzzer sounds if the address matches the indoor unit.

Remote controller address display	Address ALL	Address 1	Address 2	Address 3
Indoor unit PCB address, DIP switch	6 5 4 ON 3 2 1 OFF Address 123 NO	6 5 4 ON 3 2 1 OFF Address 123 NO	6 5 4 ON 3 2 1 OFF Address 123 NO	6 5 4 ON 3 2 1 OFF Address 123 NO

For address switches 1, 2, and 3, turn DIP switch 1 to OFF.
For address switches 4, 5, and 6, turn DIP switch 1 to ON.

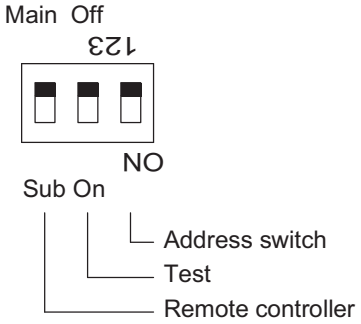

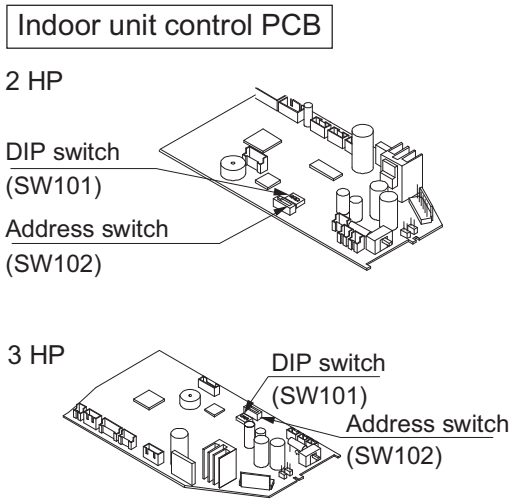

■ U1, T2, F1, N1 Types (for Link Wiring)

Caution

This unit may be used in a single-type refrigerant system where 1 outdoor unit is connected to 1 indoor unit, and also in a system where 1 outdoor unit is connected to multiple indoor units (maximum 2 □Twin □).

- This test run explanation describes primarily the procedure when using the wired remote controller.
- If link wiring is used, set the outdoor unit system address to allow the combination of indoor and outdoor units to be identified.
  At the same time, indicate the indoor-outdoor unit combination number in a location where it can be checked easily (near the indoor unit nameplates). (This number will be required for subsequent maintenance.)
- Request that the customer be present when the test run is performed. At this time, explain the Operating Instructions and have the customer perform the actual steps.
- Be sure to pass the manuals and warranty certificate to the customer.
- Check that the 220 □240 V AC wiring is not connected to the inter-unit control wiring connector terminal.
  If 220 □240 V AC is accidentally applied, the indoor or outdoor unit control PCB fuse will blow in order to protect the PCB. Correct the wiring connections, then disconnect the 2P connectors (indoor: blue, OC) (outdoor: blue, serial 1) that are connected to the PCB, and replace them with 2P connectors (indoor: brown, EMG) (outdoor: brown, serial 2).
  If operation is still not possible after changing the brown connectors, try cutting the varistor (black).
  (Be sure to turn the power OFF before performing this work.)

Indoor unit control PCB

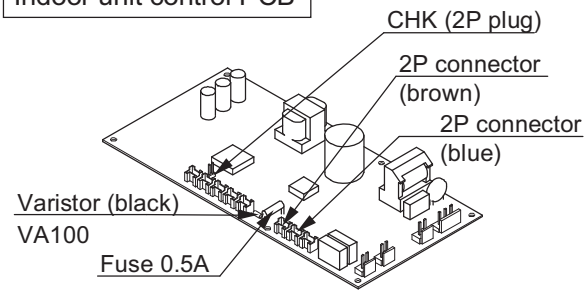

Outdoor unit control PCB

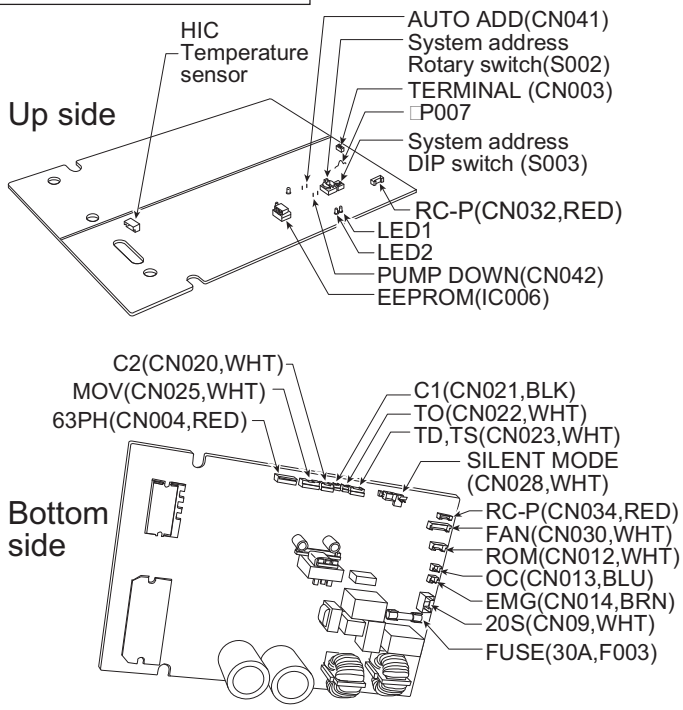

Test Run Procedure

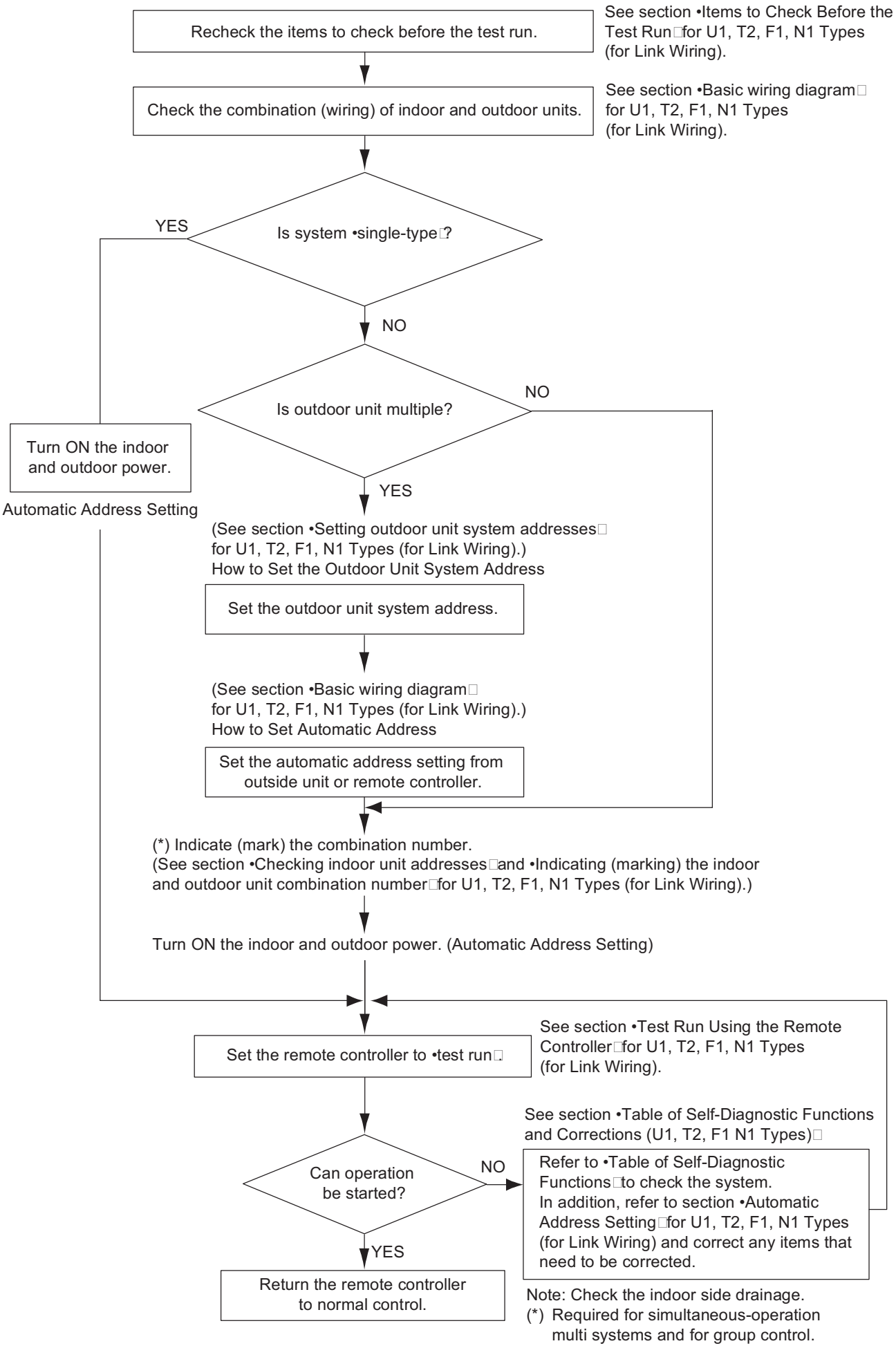

Items to Check Before the Test Run

(1) Turn the remote power switch ON at least 12 hours in advance in order to energize the crankcase heater.
(2) Fully open the closed valves on the liquid tube and gas tube sides.

Test Run Using the Remote Controller

(1) Press and hold the remote controller button for 4 seconds or longer. Then press the button.

- •TEST appears in the LCD display during the test run.
- Temperature control is not possible when test run mode is engaged.
  (This mode places a large load on the devices. Use it only when performing the test run.)

(2) Use either Heating or Cooling mode to perform the test run.

NOTE The outdoor unit will not operate for approximately 3 minutes after the power is turned ON or after it stops operating.

(3) If normal operation is not possible, a code appears on the remote controller LCD display.
Refer to the section •Table of Self-Diagnostic Functions and Corrections and correct the problem.

(4) After the test run is completed, press the button again.
Check that •TEST disappears from the LCD display.
(This remote controller includes a function that cancels test run mode after a 60-minute timer has elapsed, in order to prevent continuous test run operation.)

(5) For the test run of an inverter outdoor unit, operate the compressors for a minimum of 10 minutes (in order to check for open phase).
* When performing a test run using a wired remote controller, operation is possible without attaching the cassette-type ceiling panel. (•P09 will not be displayed.)

Table of Self-Diagnostic Functions and Corrections (U1, T2, F1 N1 Types)

Wired remote controller display	Indoor unit receiver lamp	Cause Group connection and simultaneous-operation multi (Simultaneous multi system) system	Correction
Nothing is displayed	Nothing is displayed.	● Remote controller is not connected with indoor unit correctly. ● Indoor unit power is not ON.	● Connect the remote controller correctly. ● Turn ON the indoor unit power.
E01 displayed	Operation lamp is blinking.	● Automatic address setting has not been completed. ● Inter-unit control wiring is cut or is not connected correctly. ● Remote controller is not connected with indoor unit correctly.	● Check the remote controller and inter-unit control wiring. ● Perform automatic address setting (See section •Automatic Address Setting for U1, T2, F1, N1 Types (for Link Wiring).).
E02 displayed		● Remote controller is not connected with indoor unit correctly.	● Connect the remote controller correctly.
E14 displayed		● Remote control communication wiring is cut or is not connected correctly.	● Check the remote control communication wiring. ● Perform automatic address setting again.
E04 displayed	Standby lamp is blinking.	● Indoor-outdoor inter-unit wiring is not connected correctly.	● Connect the wiring correctly.
E06 displayed		● Inter-unit control wiring is cut or is not connected correctly.	● See section •Basic wiring diagram for U1, T2, F1, N1 Types (for Link Wiring). Basic wiring diagram, and make the correct setting.
E15 displayed		● Indoor unit capacity is too low.	● Check that the total capacities of the indoor and outdoor units are appropriate.
E16 displayed		● Indoor unit capacity is too high.	
P05 displayed	Operation lamp and Standby lamp are blinking alternately.	● Reversed phase at one of the outdoor units in the group. ● Insufficient gas	● Reverse 2 phases of the outdoor unit 3-phase power and connect them correctly. ● Fill up the gas appropriately.
P09 displayed	Timer lamp and Standby lamp are blinking alternately.	● Ceiling panel connector at one of the indoor units in the group is not connected correctly.	● Connect the indoor unit ceiling panel connector correctly.
P12 displayed		● DC fan trouble at one of the indoor units in the group.	● Check whether the fan holder is loose. ● Check the wiring between the DC fan and the PCB.
L02 L13 displayed	Both the Operation lamp and Standby lamp are blinking together.	● Indoor-outdoor unit type mismatch.	● Check that the indoor and outdoor unit types are correct.
L07 displayed		● Remote control communication wiring is connected to the indoor unit, however it is set for individual operation.	● Perform automatic address setting (See section •Automatic Address Setting for U1, T2, F1, N1 Types (for Link Wiring).).
L10 displayed		● Check outdoor operation with separate maintenance-use remote controller.	

Automatic Address Setting

Basic wiring diagram

- Link wiring

NOTE

- A terminal plug (black) is attached to each of the outdoor unit control PCBs.
  At only one outdoor unit, leave the terminal plug shortcircuit socket on the □Yes□side.
  At all the other outdoor units, change the socket (from □Yes□to □No□).
- A maximum of 8 indoor units can be connected to 1 remote controller for group control.

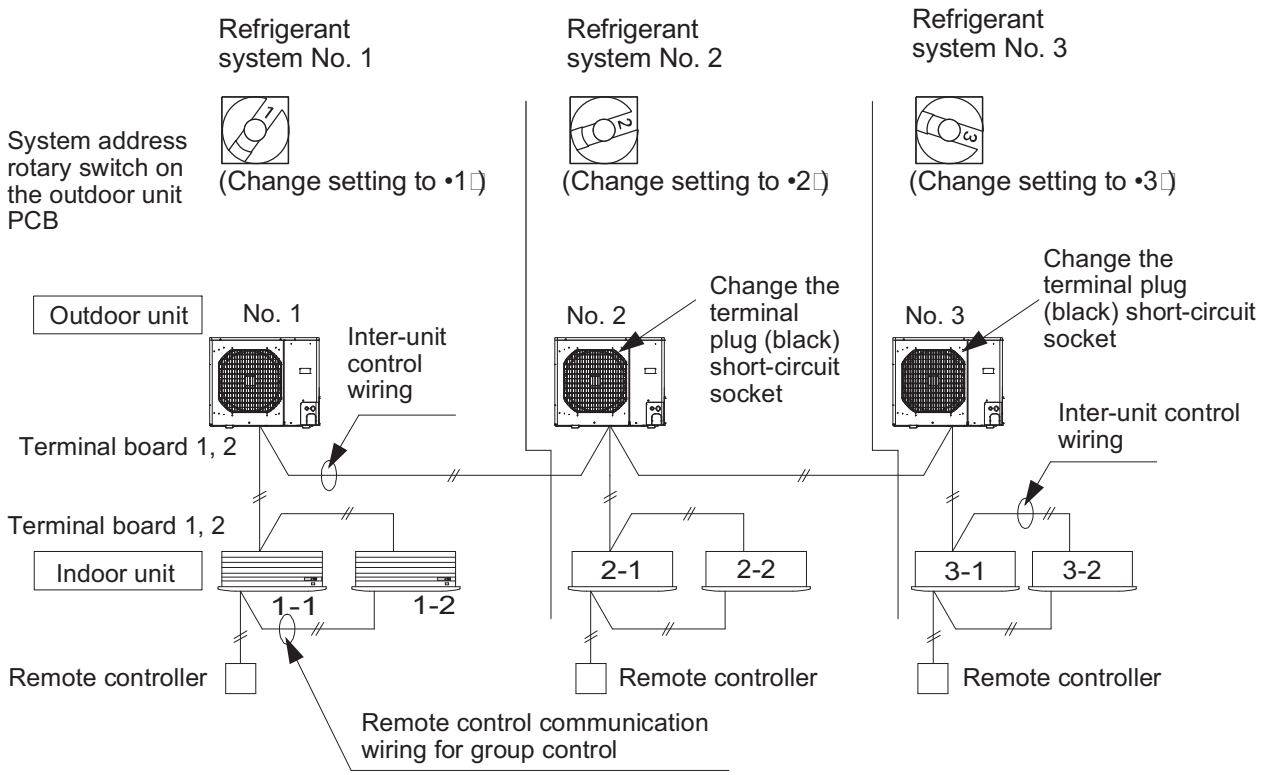

Automatic address setting from the outdoor unit (U1, T2, F1, N1 types)

Case 1

- If the power can be turned ON separately for the indoor and outdoor units in each system:
  The indoor unit addresses can be set without running the compressor.
- Be sure to use a jig for short-circuiting.

(1) Turn on the indoor and outdoor unit power for refrigerant system 1.
Short-circuit the AUTO ADD (CN041) pin.
↓
Communication for automatic address setting begins.
↓
LED 1 and 2 on the outdoor unit control PCB blink alternately, and turn OFF when address setting is completed.
↓ □Approximately 4 □5 minutes are required.□

(2) Next, turn ON the power only at the indoor and outdoor units in a different system. Short-circuit the AUTO ADD (CN041) pin.
↓
LED 1 and 2 on the outdoor unit control PCB blink alternately, and turn OFF when address setting is completed.
↓
Repeat the same procedure for each system and complete automatic address setting.
↓

(3) Operation using the remote controller is now possible.

Case 2

- If the power cannot be turned ON separately for the indoor and outdoor units in each system:
  The compressors must be run in order to automatically set the indoor unit addresses.
  Therefore perform this step after completing the refrigerant tubing work.
- Be sure to use a jig for short-circuiting.

(1) Turn ON the power to the indoor and outdoor units in all refrigerant systems.

↓

When setting addresses in cooling mode

(2) Short-circuit the mode-change pin at the outdoor unit where automatic address setting will be performed.
Short-circuit the AUTO ADD (CN041) pin.

↓

When setting addresses in heating mode

(2) Short-circuit the AUTO ADD (CN041) pin.

↓

(3) LED 1 and 2 blink alternately.
The compressors begin running in Cooling (or Heating) mode.
Communication for automatic address setting begins, using the temperature changes at the indoor units.

□All indoor units are in operating status.□

↓

Address setting is completed when the compressors stop and the LED indicators turn OFF.
□Approximately 15 minutes is required for 1 system.□
If address setting fails, LED 1 and 2 blink simultaneously and the alarm contents are displayed at the remote controller.

(4) After 1 system is completed, be sure to short-circuit the AUTO ADD (CN041) pin at the other outdoor units to complete automatic address setting in the same way for each system.

(5) Operation using the remote controller is now possible.

Automatic address setting using the remote controller

Case 3

- If the power can be turned ON separately for the indoor and outdoor units in each system (indoor unit addresses can be set without running the compressor):

Individual system automatic address setting: Display item code •A1□

(1) Press the remote controller timer time [▲] button and [🔧] button simultaneously. (Hold for 4 seconds or longer.)

↓

(2) Then press either the temperature setting [▲] or [▼] button. (Confirm that the item code is •A1□)

↓

(3) Use either the [UNIT] or [ ] button to select the outdoor unit to perform automatic address setting for.
Then press the [SET] button.
(•R.C.1□is displayed, and automatic address setting is performed for refrigerant system 1.)
When automatic address setting for system 1 is completed, the units return to normal stopped status.
□Approximately 4 □5 minutes are required.□

During automatic address setting, •SETTING□blinks on the remote controller display.
This display disappears when address setting is completed.

Case 4

- If the power cannot be turned ON separately for the indoor and outdoor units in each system:
  (The compressors must be run in order to automatically set the indoor unit addresses.
  Therefore perform this step after completing the refrigerant tubing work.)

All-systems automatic address setting: Display item code •AA□

(1) Press the remote controller timer time ▲ button and 🔧 button simultaneously. (Hold for 4 seconds or longer.)

↓

(2) Next press the SET button.
(Automatic address setting is performed in sequence for all outdoor units from No. 1 to No. 30.
When automatic address setting is completed, the units return to normal stopped status.)
□Approximately 15 minutes is required for each system.□

↓

During automatic address setting, •SETTING□blinks on the remote controller display.
This display disappears when address setting is completed.

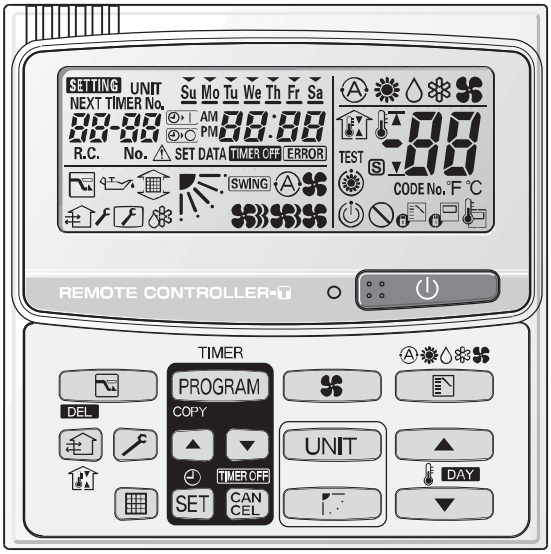

Setting outdoor unit system addresses

For the basic wiring diagram (Set the system addresses: 1, 2, 3...)

Outdoor unit control PCB

System address rotary switch (Set to •0□at time of shipment)

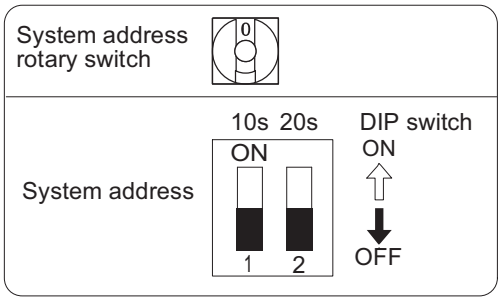

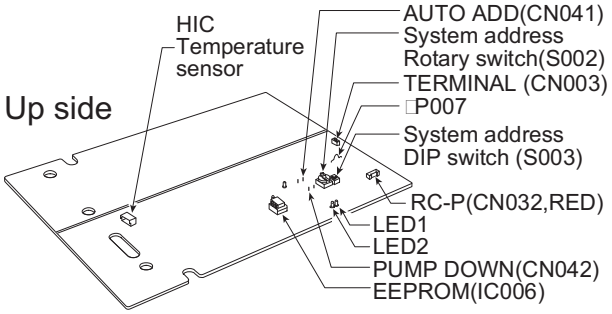

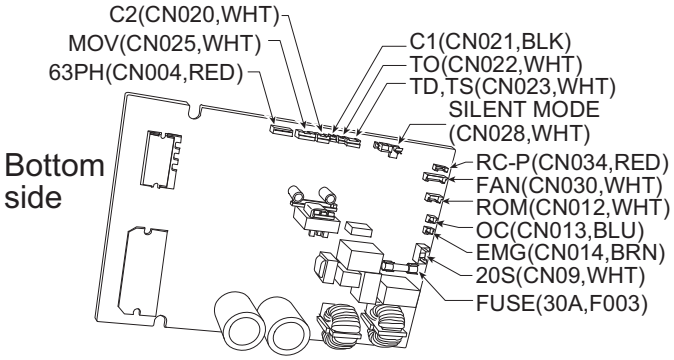

System address No.	System address 10s digit (2P DIP switch)	System address 1s place (Rotary switch)
0 Automatic address (Setting at shipment = •0□)	Both OFF (ON / 1 2 / ON ⇧ ↓ OFF)	•0□setting
1 (If outdoor unit is No. 1)	Both OFF (ON / 1 2 / ON ⇧ ↓ OFF)	•1□setting
2 (If outdoor unit is No. 2)	Both OFF (ON / 1 2 / ON ⇧ ↓ OFF)	•2□setting
11 (If outdoor unit is No. 11)	10s digit ON (ON / 1 2 / ON ⇧ ↓ OFF)	•1□setting
21 (If outdoor unit is No. 21)	20s digit ON (ON / 1 2 / ON ⇧ ↓ OFF)	•1□setting
30 (If outdoor unit is No. 30)	10s digit and 20s digit ON (ON / 1 2 / ON ⇧ ↓ OFF)	•0□setting

Checking indoor unit addresses

Use the remote controller to check the addresses of the indoor units.
Press and hold the button and button for 4 seconds or longer (simple settings mode, •ALL appears on the remote controller).

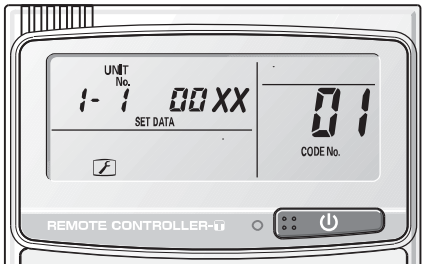

Then press the UNIT button and select the indoor address.
(For the system addresses of the No. 1 outdoor unit, each time the button is pressed, the address changes as follows: 1-1, 1-2)
The indoor unit fan operates only at the selected indoor unit.
Confirm the indoor unit address. (For the system addresses of the No. 2 outdoor unit, the displayed addresses are 2-1, 2-2)

Press the button again to return to the normal remote controller mode.

Indicating (marking) the indoor and outdoor unit combination number

Indicate (mark) the number after automatic address setting is completed.

(1) So that the combination of each indoor unit can be easily checked when multiple units are installed, ensure that the indoor and outdoor unit numbers correspond to the system address number on the outdoor unit control PCB, and use a magic marker or similar means which cannot be easily removed to indicate the numbers in an easily visible location on the indoor units (near the indoor unit nameplates).

Example: (Outdoor) 1 (Indoor) 1, 2
(Outdoor) 2 (Indoor) 1, 2

(2) These numbers will be needed for maintenance.
Be sure to indicate them.

■ K1 Type (for Link Wiring)

Caution

- This unit may be used in a single-type refrigerant system where 1 outdoor unit is connected to 1 indoor unit, and also in a system where 1 outdoor unit is connected to multiple indoor units (maximum 2).
- If link wiring is used, set the outdoor unit system address to allow the combination of indoor and outdoor units to be identified.
  At the same time, indicate the indoor-outdoor unit combination number in a location where it can be checked easily (near the indoor unit nameplates). (This number will be required for subsequent maintenance.
  Refer to section •Checking indoor unit addresses□and •Indicating (marking) the indoor and outdoor unit combination number□for K1 Type (for Link Wiring).)
- Request that the customer be present when the test run is performed. At this time, explain the Operating Instructions and have the customer perform the actual steps.
- Be sure to pass the manuals and warranty certificate to the customer.
- Check that the 220 □240 V AC wiring is not connected to the inter-unit control wiring connector terminal.
  If 220 □240 V AC is accidentally applied, the indoor or outdoor unit control PCB fuse (0.5 A for both indoor and outdoor units) will blow in order to protect the PCB.
  Correct the wiring connections, then disconnect the 2P connectors (indoor: blue, OC) (outdoor: blue, serial 1) that are connected to the PCB, and replace them with 2P connectors (indoor: brown, EMG) (outdoor: brown, serial 2).
  If operation is still not possible after changing the brown connectors, cut off the jumper (outdoor unit : □P007) or the varistor (indoor unit) on the PCB.
  (Be sure to turn the power OFF before performing this work.)

Indoor unit control PCB

2 HP

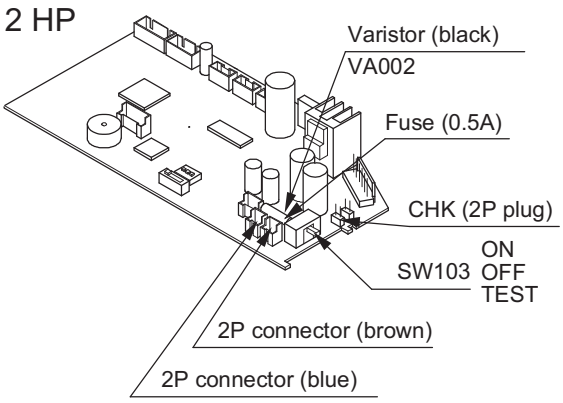

3 HP

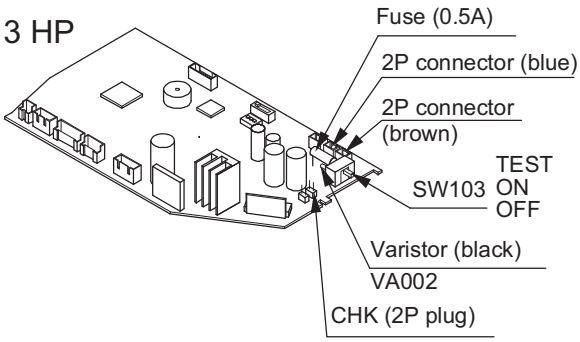

Outdoor unit control PCB

Up side

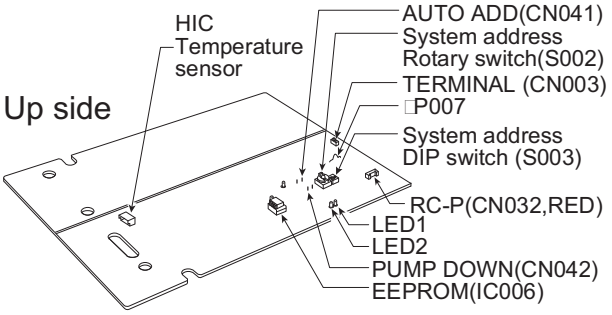

Bottom side

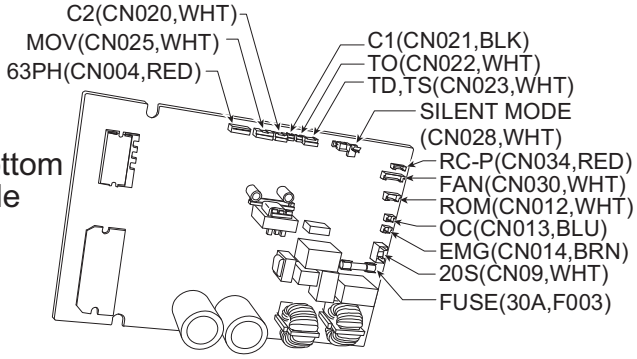

Test Run Procedure

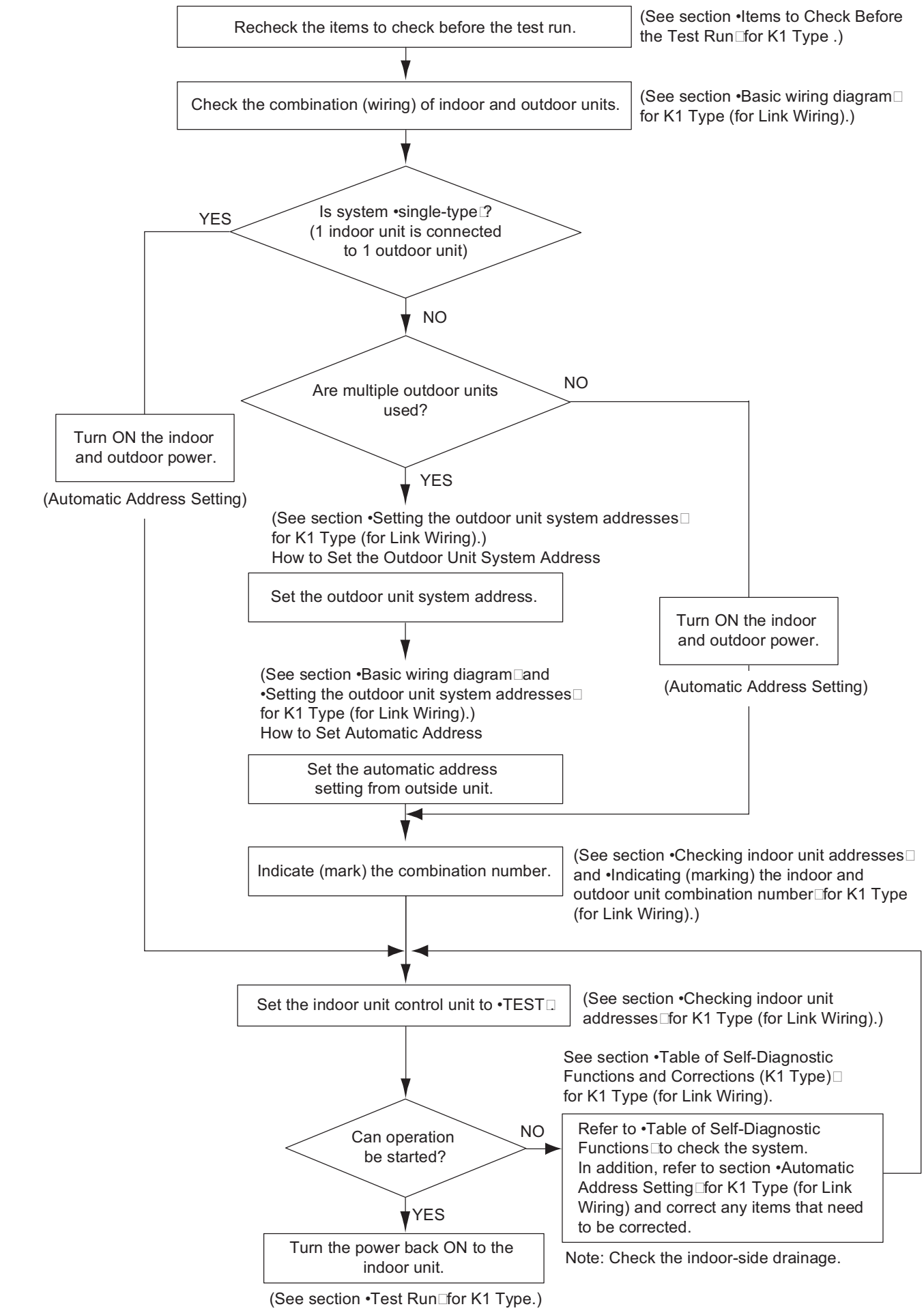

Table of Self-Diagnostic Functions and Corrections (K1 Type)

Wired remote controller display	Indoor unit receiver lamp	Cause Group connection and simultaneous-operation multi system	Correction
Nothing is displayed	Nothing is displayed.	●Remote controller is not connected with indoor unit correctly. ●Indoor unit power is not ON.	● Connect the remote controller correctly. ● Turn ON the indoor unit power.
E01 displayed	Operation lamp is blinking.	●Automatic address setting has not been completed. ●Inter-unit control wiring is cut or is not connected correctly. ●Remote controller is not connected with indoor unit correctly.	● Check the remote controller and inter-unit control wiring. ● Perform automatic address setting. (See section •Automatic Address Setting for K1 Types (for Link Wiring).).
E02 displayed		●Remote controller is not connected with indoor unit correctly.	● Connect the remote controller correctly.
E14 displayed		●Remote control communication wiring is cut or is not connected correctly.	● Check the remote control communication wiring. ● Perform automatic address setting again.
E04 displayed	Standby lamp is blinking.	●Indoor-outdoor inter-unit wiring is not connected correctly.	● Connect the wiring correctly.
E06 displayed		●Inter-unit control wiring is cut or is not connected correctly.	● See section •Basic wiring diagram for K1 Types (for Link Wiring). Basic wiring diagram, and make thecorrect setting.
E15 displayed		●Indoor unit capacity is too low.	● Check that the total capacities of the indoor and outdoor units are appropriate.
E16 displayed		●Indoor unit capacity is too high.	
P05 displayed	Timer lamp and Standby lamp are blinking alternately.	●Reversed phase or open phase in the 3-phase power at one of the outdoor units in the group. ●Insufficient gas	● Reverse 2 phases of the outdoor unit 3-phase power and connect them correctly. ● Fill up the gas appropriately.
P09 displayed	Timer lamp and Standby lamp are blinking alternately.	●Ceiling panel connector at one of the indoor units in the group is not connected correctly.	● Connect the indoor unit ceiling panel connector correctly.
P12 displayed		●DC fan trouble at one of the indoor units in the group.	● Check whether the fan holder is loose. ● Check the wiring between the DC fan and the PCB.
L02 L13 displayed	Both the Operation lamp and Standby lamp are blinking together.	●Indoor-outdoor unit type mismatch.	● Check that the indoor and outdoor unit types are correct.
L07 displayed		●Remote control communication wiring is connected to the indoor unit, however it is set for individual operation.	● Perform automatic address setting. (See section •Automatic Address Setting for K1 Type (for Link Wiring).)
L10 displayed		●Check outdoor operation with separate maintenance-use remote controller.	

Automatic Address Setting

Basic wiring diagram

- Link wiring

NOTE

- A terminal plug (black) is attached to each of the outdoor unit control PCBs.
  At only 1 outdoor unit, leave the terminal plug short-circuit socket on the •Yes□side.
  At all the other outdoor units, change the socket (from •Yes□to •No□).
- A maximum of 8 indoor units can be connected to 1 remote controller for group control.

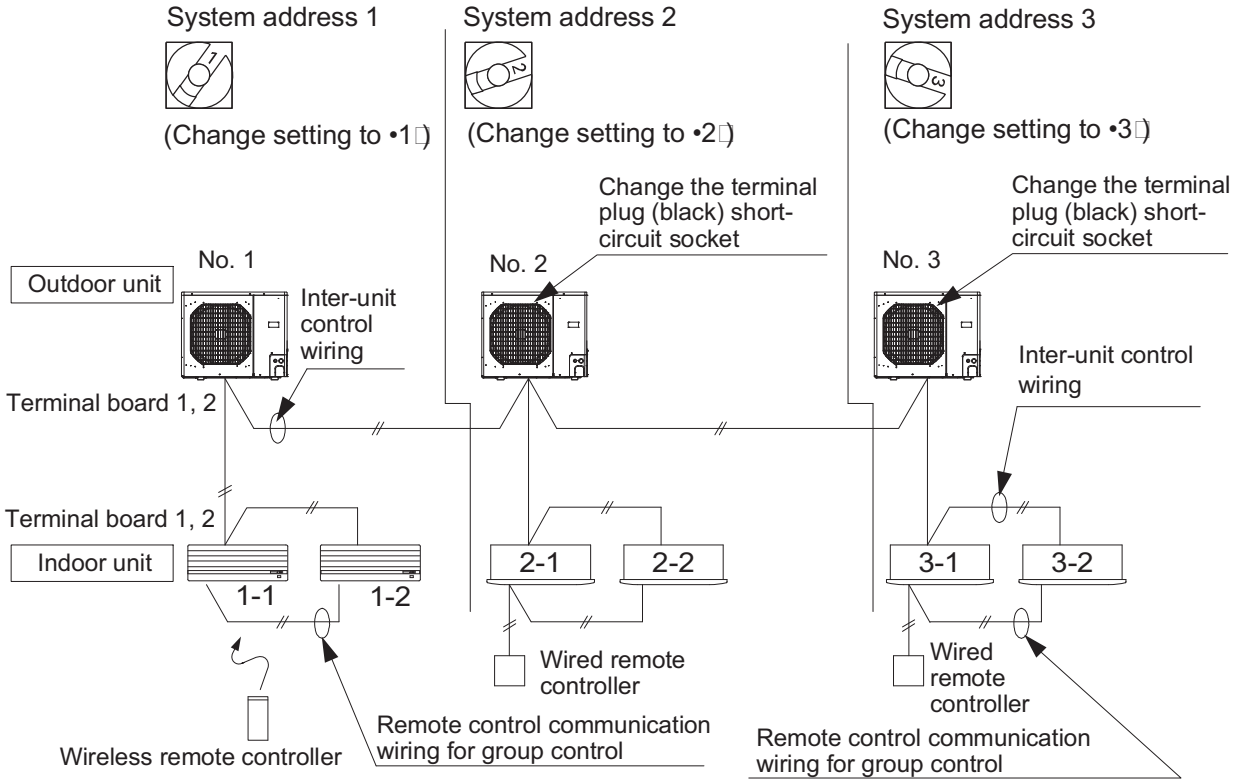

* If wall mounted type units are used for a simultaneous-operation multi system (group control), refer to section •System Control□for K1 Type.
System Control (basic wiring diagrams and wiring procedures) when wiring.

Setting the outdoor unit system addresses

For basic wiring diagram (Set the system addresses: 1, 2, 3...)

Outdoor unit control PCB

System address rotary switch
(Set to •0□at time of shipment)

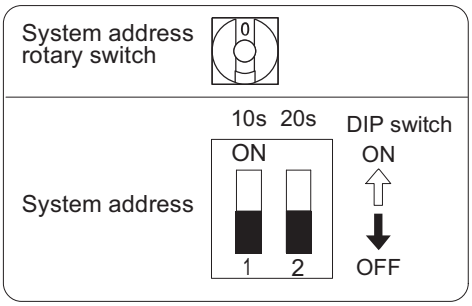

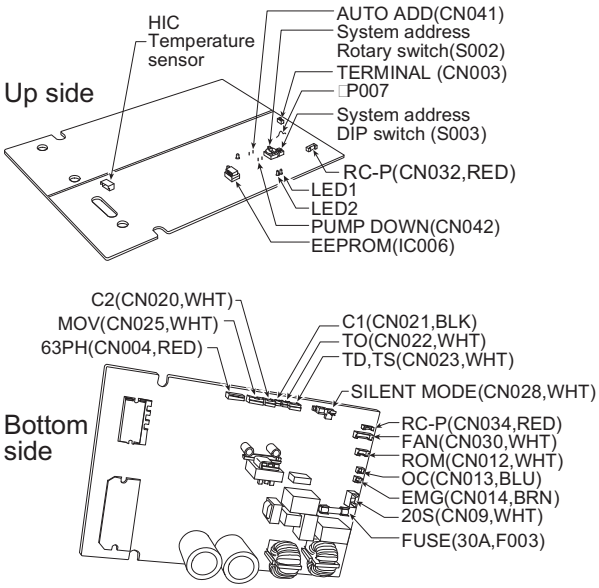

System address No.	System address 10s digit (2P DIP switch)	System address 1s place (Rotary switch)
0 Automatic address (Setting at shipment = •0□)	Both OFF 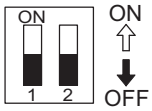	•0□setting
1 (If outdoor unit is No. 1)	Both OFF 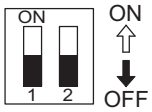	•1□setting
2 (If outdoor unit is No. 2)	Both OFF 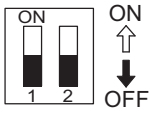	•2□setting
11 (If outdoor unit is No. 11)	10s digit ON 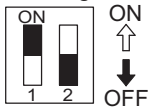	•1□setting
21 (If outdoor unit is No. 21)	20s digit ON	•1□setting
30 (If outdoor unit is No. 30)	10s digit and 20s digit ON	•0□setting

Case 1

- If the power can be turned ON separately for the indoor and outdoor units in each system:
  The indoor unit addresses can be set without running the compressor.
- Be sure to use a jig for short-circuiting.

Automatic address setting from the outdoor unit (K1 type)

(1) Turn on the indoor and outdoor unit power for refrigerant system 1.
Short-circuit the AUTO ADD (CN041) pin.
The compressor operates when the power is turned ON at a different outdoor unit.
↓
Communication for automatic address setting begins.
↓
LED 1 and 2 on the outdoor unit control PCB blink alternately, and turn OFF when address setting is completed.
↓ □Approximately 4 □5 minutes are required.□

(2) Next, turn ON the power only at the indoor and outdoor units in a different system.
Short-circuit the AUTO ADD (CN041) pin.
↓
LED 1 and 2 on the outdoor unit control PCB blink alternately, and turn OFF when address setting is completed.
↓
Repeat the same procedure for each system and complete automatic address setting.
↓

(3) Operation using the remote controller is now possible.

Case 2

- If the power cannot be turned ON separately for the indoor and outdoor units in each system:
  The compressors must be run in order to automatically set the indoor unit addresses.
  Therefore perform this step after completing the refrigerant tubing work.
- Be sure to use a jig for short-circuiting.

(1) Turn ON the power to the indoor and outdoor units in all refrigerant systems.

↓

When setting addresses in cooling mode

(2) Short-circuit the mode-change pin at the outdoor unit where automatic address setting will be performed.
Short-circuit the AUTO ADD (CN041) pin.

↓

When setting addresses in heating mode

(2) Short-circuit the AUTO ADD (CN041) pin.

↓

(3) LED 1 and 2 blink alternately.
The compressors begin running in cool (or heat) mode.
Communication for automatic address setting begins, using the temperature changes at the indoor units.

↓

Address setting is completed when the compressors stop and the LED indicators turn OFF.
□Approximately 15 minutes is required for 1 system.□
If address setting fails, LED 1 and 2 blink simultaneously and the alarm contents are displayed at the remote controller.

(4) After 1 system is completed, be sure to short-circuit the AUTO ADD (CN041) pin at the other outdoor units to complete automatic address setting in the same way for each system.

(5) Operation using the remote controller is now possible.

Checking indoor unit addresses

Use the remote controller to check the addresses of the indoor units.
Press and hold the button and button for 4 seconds or longer (simple settings mode, •ALL□appears on the remote controller).
Then press the UNIT button and select the indoor address.
(For the system addresses of the No. 1 outdoor unit, each time the button is pressed, the address changes as follows: 1-1, 1-2)
The indoor unit fan operates only at the selected indoor unit.
Confirm the indoor unit address.
(For the system addresses of the No. 2 outdoor unit, the displayed addresses are 2-1, 2-2)
Press the button again to return to the normal remote controller mode.

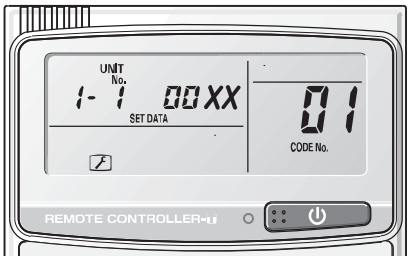

Indicating (marking) the indoor and outdoor unit combination number

Indicate (mark) the number after automatic address setting is completed.

(1) So that the combination of each indoor unit can be easily checked when multiple units are installed, ensure that the indoor and outdoor unit numbers correspond to the system address number on the outdoor unit control PCB, and use a magic marker or similar means which cannot be easily removed to indicate the numbers in an easily visible location on the indoor units (near the indoor unit nameplates).

Example: (Outdoor) 1 □(Indoor) 1, 2
(Outdoor) 2 □(Indoor) 1, 2

(2) These numbers will be needed for maintenance.
Be sure to indicate them.

Remote controller setting mode

To set the remote controller main/sub setting or change the sensor, follow the steps below.

(1) Press both [ ] and [SET] buttons on the remote controller for more than 4 seconds together.

(2) Select CODE No. with [▲] / [▼] (🌡) buttons.

(3) Change DATA with [▲] / [▼] (TIMER) buttons.

(4) Press [SET] . Finally, press [🔧] .

* DATA is memorized in the RCU. (DATA setting will not be changed even when the power is turned off.)
* Make sure to set [Normal] for RCU. CK.

CODE ITEM	ITEM	DATA	
		0000	0001
01	RCU. Main/Sub	Sub	Main
02	Clock display	24 hours	12 hours (AM/PM)
08	RCU. CK	RCU. CK	Normal
0A	Room temperature sensor	Main unit	RCU

■ U-60PE1E5A □U-140PE1E5A, U-71PE1E8A □U-140PE1E8A
U-100PEY1E5, U-125PEY1E5, U-100PEY1E8, U-125PEY1E8, U-140PEY1E8

ACCESSORIES SUPPLIED WITH OUTDOOR UNIT

The following parts are supplied as accessories with each outdoor unit.
Check that all accessory parts are present before installing the outdoor unit.

Part name	Q•ty	Diagram	Application
Protective bushing	2		For protecting electrical wires
Banding strap	4		For tying electrical wires together

Part name	Q•ty	Diagram	Application
Installation Instructions		———	This manual

SELECT THE OUTDOOR UNIT INSTALLATION LOCATION

⚠ WARNING	Be careful when picking up and moving the indoor and outdoor units. Get a partner to help, and bend your knees when lifting to reduce strain on your back. Sharp edges or thin aluminum fins on the air conditioner can cut your fingers.

1. Install the unit once you have checked that the installation location matches the following conditions.
   - A location with sufficient ventilation.
   - Possibly a location that is sheltered from rain or direct sunlight and is well-ventilated so that hot and cool air does not build up.
   - A location where the area around the discharge is not exposed to animals or plants which could adversely affect the release of hot or cool air from the unit.
   - A location where the discharge and operation noise will not be a nuisance to the neighbours.
   - A location that can support the product•s weight or vibrations and secured for horizontal installation wherever possible.
   - A location that does not obstruct the air discharge or intake.
   - A location where there is no danger of flammable or corrosive gas leaks.
   - A location that provides space for installation and service.
   - A location that allows the pipe and cable length fixture for internal and external connections.
   - It may need two or more people to carry out the installation work.
2. Refer to the diagram below for the installation location which is exposed to strong wind.
   - If a strong wind of more than 5 m/s blows to the area directly in front of the discharge, the outdoor unit•s air flow is reduced and the out" ow may re-enter (short circuit) causing the following outcome: •Reduced capacity□, •Increased frost formation during heating□or •Operation stopped due to increased pressure□.
     Should an exceptionally strong wind blow to the area directly in front of the discharge of the outdoor unit; there is the risk of damage due to the fan•s high-speed reverse rotation.
   - If the direction of the prevailing wind is known when operating the unit, place the unit at an appropriate angle to the wind•s direction so that the discharge faces towards a building or a wall.

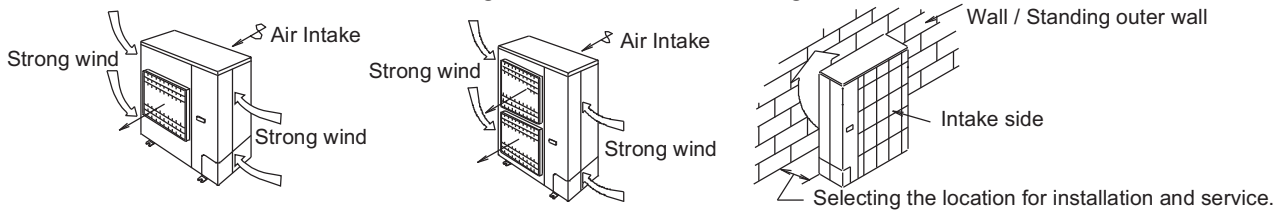

3. If installing at locations prone to snowfall, install the unit as high as possible with suitable roofing which shelters the unit from snow.
4. Avoid installing the unit in locations where there are petroleum products (such as machine oil), saline content (such as coastal areas), sulphurous gas and where high frequency noise is generated.
5. Place the indoor and outdoor unit, power cords and indoor/outdoor unit connection cables at a minimum distance of 1 meter or more away from televisions and radios. This is to avoid interference to picture and/or sound. (However, depending on the electromagnetic waves, noise interference may still occur even with the 1 meter separation.)
6. For restaurants and kitchens, avoid installing at locations which draws oil and steam. Plastic parts can deteriorate from droplets of oil and steam or it can cause falling parts or water leakage.
7. Avoid installing at the location where cutting oil mist or iron powder is present.
8. If there is an immense voltage fluctuation due to the location•s problem, ensure to split the power supply.
9. When installing the product in a place where it will be affected by typhoon or strong wind such as wind blowing between buildings, including the rooftop of a building and a place where there is no building in surroundings, fix the product with an overturn prevention wire, etc.

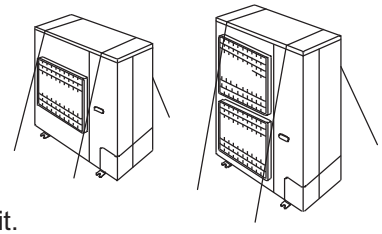

10. Ensure to assign several people or use a mechanical lift, etc. to transport the unit.

SELECTING THE LOCATION FOR INSTALLATION SERVICE

When installing multiple units, allow enough space in between the units and the side of the building.

(A) If there are obstacles at the intake

- If the upper part is open

① For separate installation location (unit: mm)

□Only if there are obstacles at the intake

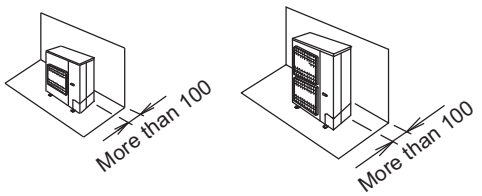

□If there are obstacles on both sides

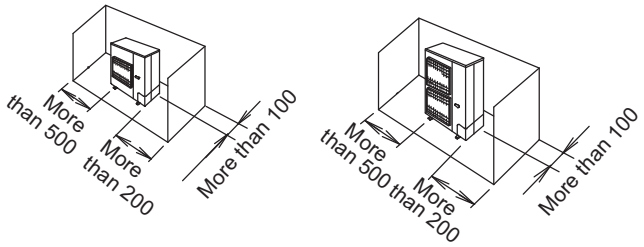

② For multiple units (more than 2 units)

□If there are obstacles on both sides

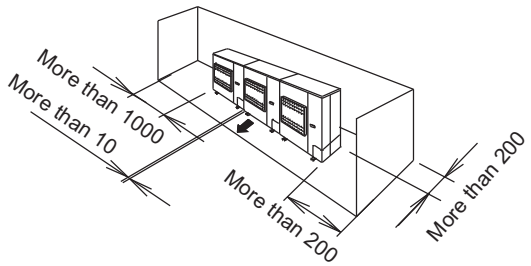

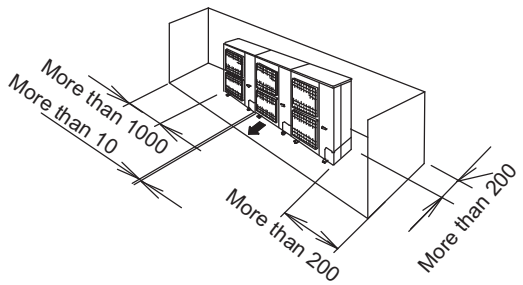

- If there are obstacles above the unit

① For separate installation location (unit: mm)

□Only if there are obstacles at the intake

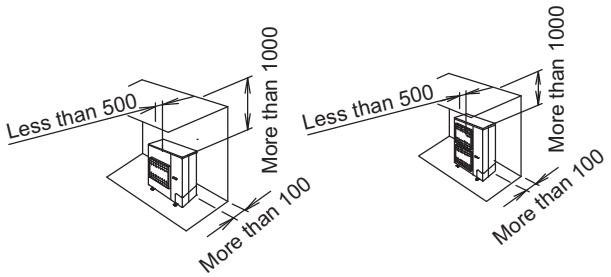

□If there are obstacles on the intake and the other side

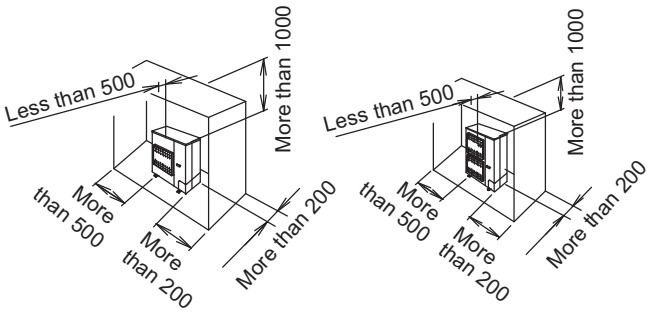

② For multiple units (more than 2 units)

□If there are obstacles on both sides

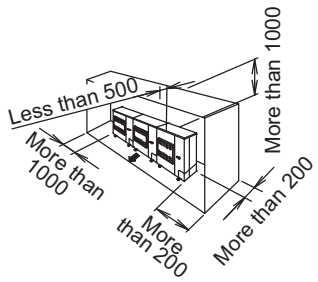

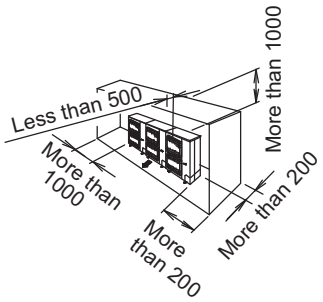

(B) If there are obstacles at the discharge

- If the upper part is open (unit: mm)

① For separate installation location

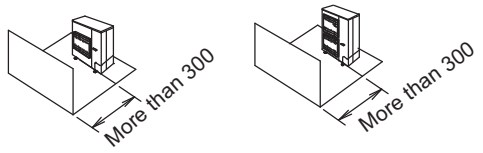

② For multiple units (more than 2 units)

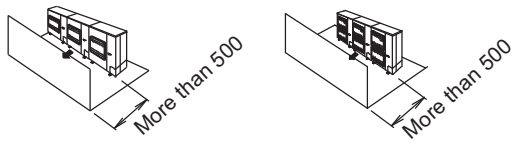

- If there are obstacles above the unit (unit: mm)

① For separate installation location

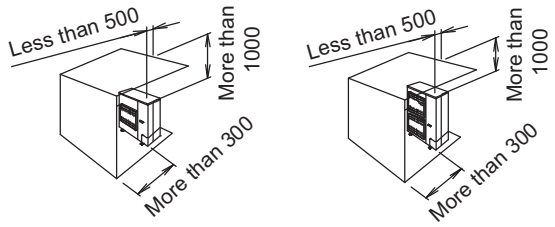

② For multiple units (more than 2 units)

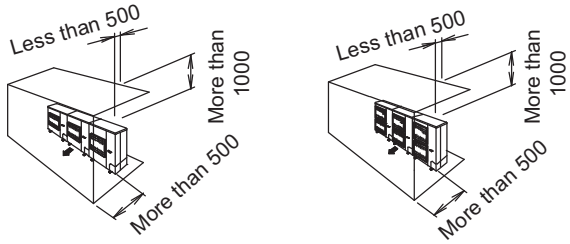

(C) If there are obstacles on both the intake and discharge

Pattern 1 If there is an obstacle that is higher than the unit on the intake side.
(There is no limit to the height of the obstacle above the discharge.)

- If the upper part is open (unit: mm)

① For separate installation location

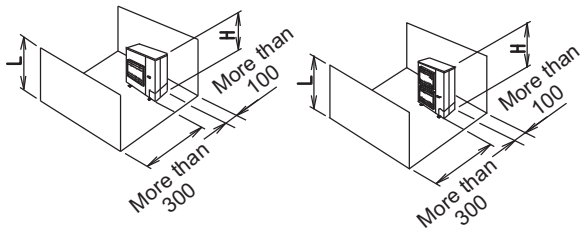

② For multiple units (more than 2 units)

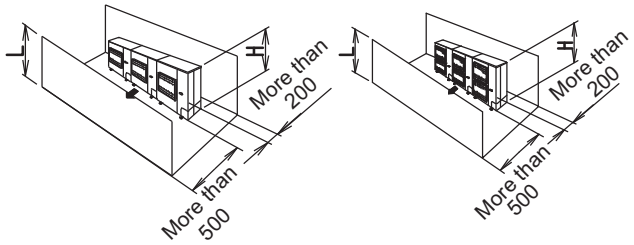

- If there are obstacles above the unit (unit: mm)

① For separate installation location

□The dimensions for H, A and L are shown in the following table.

	L	A
L ≤ H	0 □L ≤ 1/2 H	300
	1/2H □L ≤ H	500
H □L	Install a pedestal or mount so that L ≤ H	

□Cover the bottom part of the pedestal or mount so that air does not go through it.

L > H

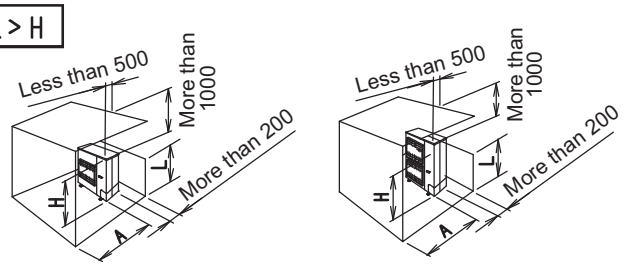

② For multiple units (up to 2 units)

□The dimensions for H, A and L are shown in the following table.

	L	A
L ≤ H	0 □L ≤ 1/2 H	500
	1/2H □L ≤ H	750
H □L	Install a pedestal or mount so that L ≤ H	

□Cover the bottom part of the pedestal or mount so that air does not bypass it.

□A limit of only 2 units can be installed.

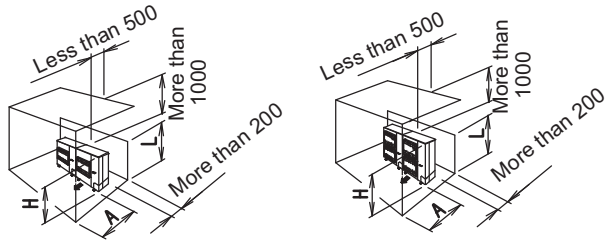

Pattern 2 If there is an obstacle that is higher than the unit on the discharge side.
(There is no limit to the height of theobstacle above the discharge.)

- If the upper part is open (unit: mm)

① For separate installation location

L ≤ H

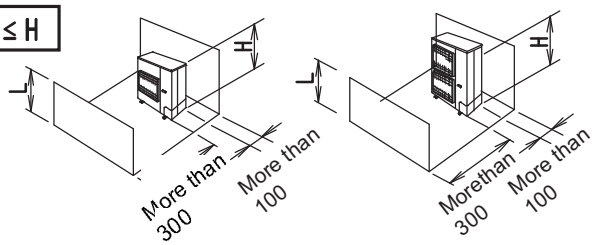

② For multiple units (more than 2 units)

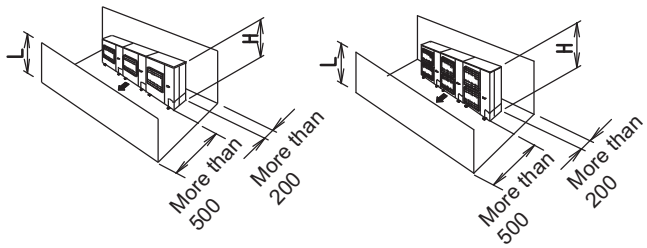

- If there are obstacles above the unit (unit: mm)

① For separate installation location

□The dimensions for H, A and L are shown in the following table.

	A
L ≤ H	100
H □ L	Install a pedestal or mount so that L ≤ H

□Cover the bottom part of the pedestal or mount so that air does not go through it.

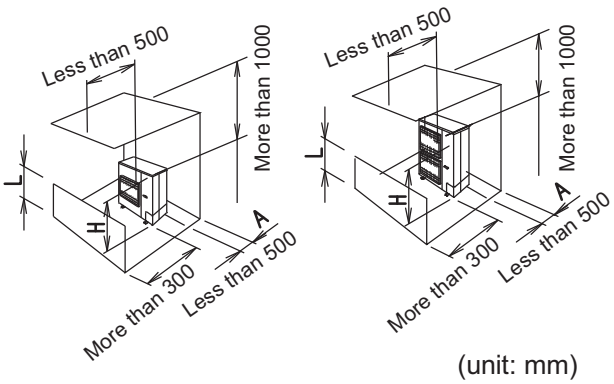

② For multiple units (up to 2 units) (unit: mm)

□The dimensions for H, A and L are shown in the following table.

	A
L ≤ H	200
H □ L	Install a pedestal or mount so that L ≤ H

□Cover the bottom part of the pedestal or mount so that air does not bypass it.
□A limit of only 2 units can be installed.

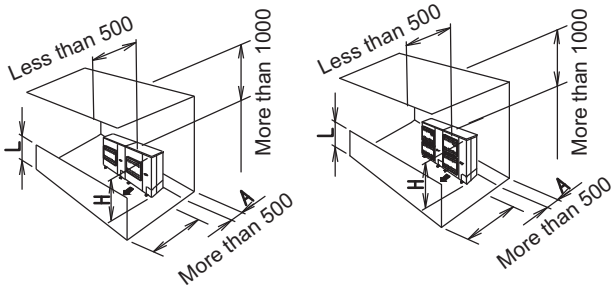

(D) Stacking installation setup

□Stack up to 2 tiers.
□A dimension of approximately 400 mm is required for the second tier outdoor unit•s drain pipe and space for maintenance of the " rst tier outdoor unit.
□Close A section (the space between the upper and lower level outdoor units) so the outtake air does not bypass it.

① If there are obstacles at the discharge (unit: mm)

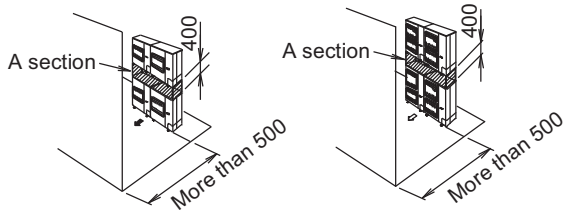

② If there are obstacles at the intake (unit: mm)

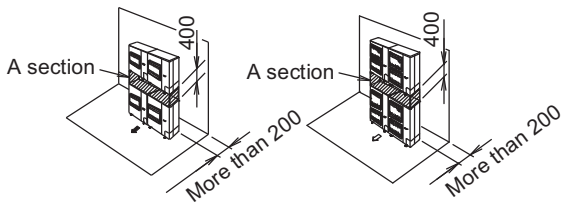

(E) For multiple row installation (on the roof, etc.)

① For one row installation setup (unit: mm)

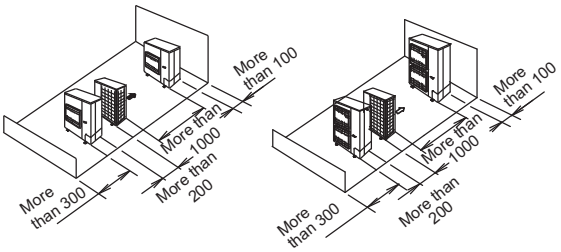

② For multiple units (more than 2 units) (unit: mm)

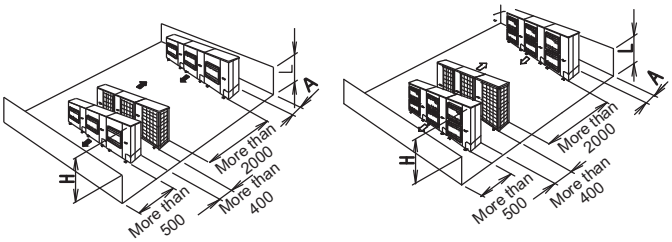

□The dimensions for H, A and L are shown in the following table.

	A
L ≤ H	200
H □ L	Installation not possible

□The above mentioned distance is required for optimal unit performance.
Allow as much space as possible in order to obtain the best performance from the units.

TRANSPORT AND INSTALL THE OUTDOOR UNIT

- Transporting
  1. Transport the outdoor unit in its original packaging as close as possible to the installation location.
  2. In the event that the unit needs to be lifted or suspended, use a rope or belt and use cloth or wood as padding to avoid damaging the unit.
  3. Use the side handles to carry the unit and be careful not to touch the fan with your hand or any objects.

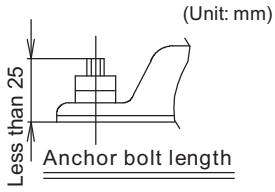

- Installation
  1. Read the •Select the outdoor unit installation location□ thoroughly before installing the outdoor unit.
  2. When installing to a concrete or solid surface, use M10 or a W 3/8 bolts and nuts to secure the unit.
     Ensure that it installed upright on a horizontal plane.
     (Use an anchor bolt for the installation as shown in the diagram at right.)
  3. Avoid installing on the slanted roof.
  4. In the even where the roof is at risk of receiving oscillations or vibrations, secure the unit with a seismic isolating mount or vibration absorbing rubber.
  5. The drain water will be discharged from the unit during heating or defrosting operation mode.
     Select an appropriate location with good drainage system. (In the winter, there is risk of slipping due to freezing, and depending on the installation set up there is risk of drain water running overhead.)
     ※ Please consult us if installing drain elbows.
     ※ In cold regions (where the outdoor temperature can drop to below 0˚ for 2 to 3 consecutive days), the drain water may freeze and may prevent the fan from operating. For this case, do not use the drain elbow.

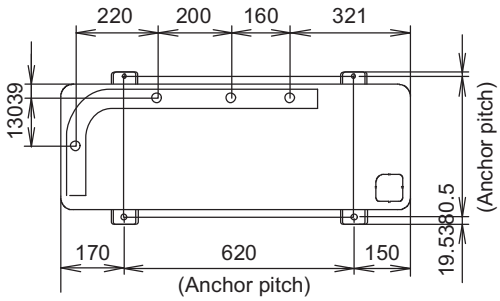

Anchor bolt position

REFRIGERANT INSTALLATION

For indoor unit refrigerant piping installation, refer to the Installation Instruction manual that comes with that indoor unit. Do not reuse existing piping, install new piping.

1. Precautions during refrigerant installation.
   - Use clean pipes with no dust inside.
     The pipe may corrode with the presence of fluorine dust which will adversely affect the refrigerant piping system due to deterioration of the refrigerant oil, etc.
   - This unit is specifically for R410A. Ensure to adhere to the following items and install accordingly:
     □Use pipe cutters and flaring tools which are specially designed for use with R410A.
     □When connecting with flaring tools, coat the flare section with ether-based oil.
     □Ensure to use flare nuts supplied with the unit when connecting this unit.
     □Only for storing or for open pipes.
     □Set the lower limit of the allowable pipe length to 5m.
     If the pipe is shorter than 5m, the refrigerant may become overfilled and a problem such as abnormal high pressure could occur.

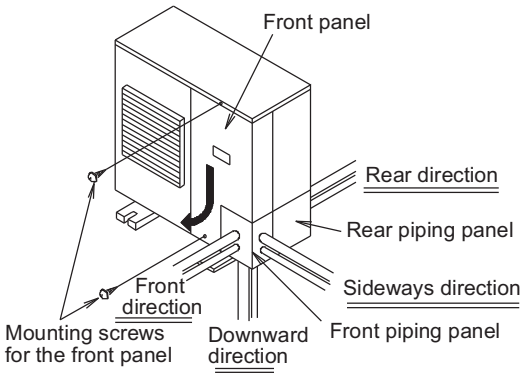

2. The local pipes can protrude from any four directions.
   - Make holes in the pipe panel for the pipes to penetrate it and lay the pipes accordingly.
     □It is recommended to apply additional substance to the cut area for anti-rust protection.

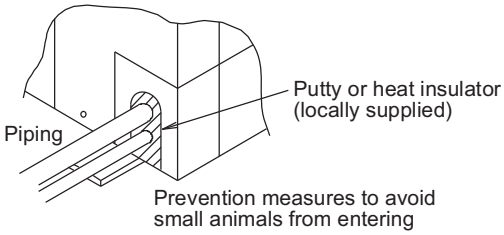

   - Ensure to install pipe panels to prevent rain water from getting into the unit.
   - Close the gap at the pipe connected area with putty or heat insulator (locally supplied).
     □If an insect or small animal enters the outdoor unit, there is the risk of shorting in the product electronic casing.
     [Remove the front panel]
     (1) Remove the 2 mounting screws.
     (2) Slide the front panel using your hands downwards to release the pawls.
     Then remove by pulling the panel towards you.

Precautions when operating the 3-way valve for piping installation

- Do not open the 3-way valve until the piping installation is completed.
  □It is closed during shipment.
  □During installation the side panel may warp if only the flare nut is loosened and tightened with a torque wrench. As a result, always be sure to secure to the hexagonal part of the 3-way valve with a spanner, or other tool.
- Refer to the following table for the tightening torque of the 3-way valve flare nuts.
  □If the nuts are over tightened, they may cause the flares to break or leak.

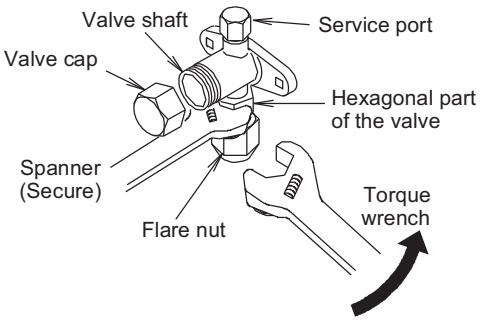

- Do not add additional force to the valve•s cover.
  □Using spanners on the cover or valve itself (other than the hexagonal parts) may cause gas leakage. Avoid using spanners on the cover or parts other than the hexagonal part of the valve.

- During the cooling mode operation under low ambient pressure, the low pressure side of the valve can be prone to freezing. Secure the flare nut (shared gas side / liquid side) section of the valve with a silicone sealing agent to prevent this from occurring.

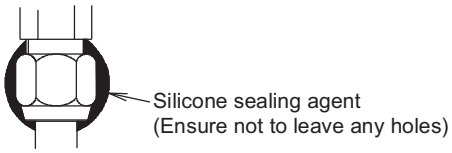

[3-way valve operation method] □ Use an Allen wrench (Size 4 mm or 6 mm).
Direction to open

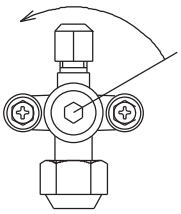

Opening : Open the cover and turn the Allen wrench counter-clockwise until it stops.
Closing : Open the cover and turn the Allen wrench clockwise until it stops.

Precautions for handling the valve cap

- Ensure not to scratch the inner surface of the valve or the end of the valve shaft.
  □Once adjustments to the valve are completed, ensure to tighten the valve cap according to the prescribed torque.

Valve size	Tightening torque
□9.52	20.6N□m□28.4N□m □2.1kgf□m□2.8kgf□m□
□15.88	48.0N□m□59.8N□m □4.8kgf□m□6.0kgf□m□

Precautions for handling the service ports

- Use a push-rod with a charge hose.
  □Once adjustments to the valve are completed, ensure to tighten the valve cap according to the prescribed torque.

Tightening torque
10.7N□m□14.7N□m □1.1kgf□m□1.5kgf□m□

Precautions for connecting the pipes

- Ensure that the pipes do not come into contact with the compressor•s bolts or exterior panel.
- There is a risk of condensation from the 3-way valve coming out between the insulation material and the indoor unit•s piping when you install the outdoor unit above then the indoor unit. Ensure to caulk the connection parts.

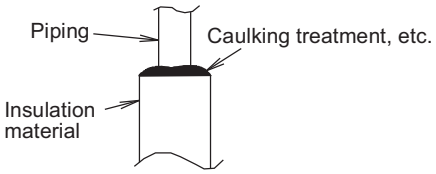

Precautions for insulation installation

Maximum temperature limit of gas or liquid piping exceeds 120 □C

- In high humidity environment, reinforce the insulation material for the refrigerant piping.
  Failure to do so may result in condensation on the surface of the insulation material.
- Use materials with good heat-resistant properties as the heat insulator for the pipes.
  Ensure to insulate both the gas side and liquid side pipes.
  If the pipes are not adequately insulated, condensation and water leakages may occur.
- Ensure that the current insulation covers the pipes up to the unit•s connecting part.
  If the piping is exposed , it may cause condensation or burn (when touch the pipe).

Precautions for flare nut installation

- Dimensions when adding flare nuts and the tightening torque

(unit: mm)

Piping size	Tightening torque	Flare section dimensions A	Flare configuration
□6.35	14.2N□m □17.2N□m □1.4kgf□m □1.7kgf□m□	8.7 □9.1	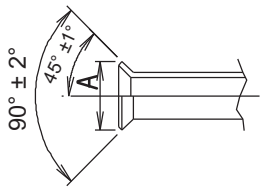
□9.52	32.7N□m □39.9N□m □3.3kgf□m □4.0kgf□m□	12.8 □13.2	
□12.7	49.5N□m □60.3N□m □5.0kgf□m □6.0kgf□m□	16.2 □16.6	
□15.88	68.0N□m □75.5N□m □6.8kgf□m □7.6kgf□m□	19.3 □19.7	

After piping connection has completed, ensure there is no gas leakage.

- When tightening the flare nut, coat the flares (inner surface only) with refrigerant oil on the flares
  Firstly, screw in 3-4 turns by hand.
  ※ Ensure not to get oil on the screw part.
  Refrigerant oil used is ether-based.

Application for ether-based oil

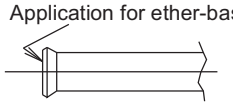

- Once the piping connections are completed, perform leakage inspection using nitrogen gas.

VACUUM PURGING

- Once the piping connections are completed, perform leakage inspection using nitrogen gas (leak tightness test) using the 3-way valve for the outdoor unit and then close it.
  Test the pressure :
  3.8 MPa : Type PE1
  4.15 MPa : Type PEY1
- Ensure to use a vacuum pump (with a back-flow prevention device) for inside the refrigerant system.
- Vacuuming process will take place after the leak test.

Use nitrogen gas for the leak tightness test.
Using flammable gas can cause an explosion.

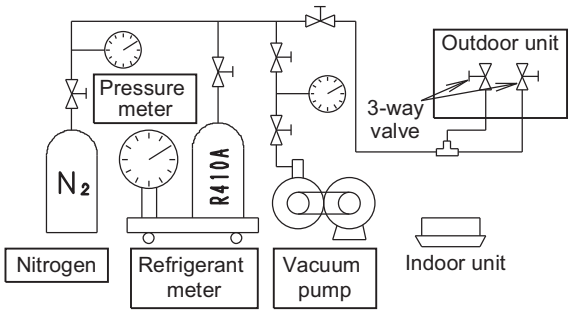

REGARDING REFRIGERANT FILLING

Precautions during refrigerant filling

- Ensure to fill only with liquid refrigerant when refilling. If gas refrigerant is filled, the refrigerant composition will not be balanced and will cause abnormal operation.
- If using cylinders as shown in the bottom left diagram; without a siphon tube inside, turn it upside down and use it.
  (It is recommended to use the manifold with the side glass.)

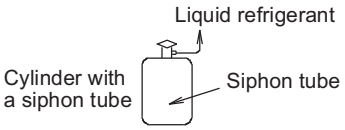

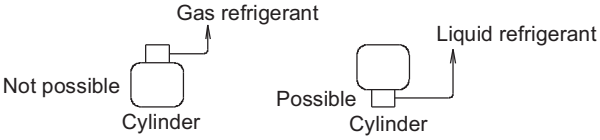

- Use tools that are designed specifically for R410A, for pressure resistance and to prevent mixing impurities.
- Fill the refrigerant from the 3-way valve•s service port on the liquid-side.

For filling and replacing all refrigerant (For refilling due to a leak)

- For refilling refrigerant, first collect all residual refrigerant and after vacuum dehydration using the vacuum pump. Refill the refrigerant according to the prescribed amount stated on the placard affixed to this unit.

Precautions after the pipes• connection have completed

- Ensure to open the 3-way valve after completing the piping installation, leak test and vacuuming.
  If it is closed during operation, it can lead to compressor failure.

Charging with refrigerant

For the type PE1

- At the time of shipment from the factory, this unit is charged with enough refrigerant for an equivalent pipe length of 30m. If the equivalent pipe length used will be 30m or less, no additional charging will be necessary.
- If the equivalent pipe length will be between 30 and 50 / 75m, charge with additional refrigerant according to the equivalent length given in the table below.

	Additional charging amount	Equivalent length	Minimum length
U-60/71PE1	50g/m	50m	5m
U-100/125/140PE1	50g/m	75m	5m

For the type PEY1

- At the time of shipment from the factory, this unit is charged with enough refrigerant for an equivalent pipe length of 30m. If the equivalent pipe length used will be 30m or less, no additional charging will be necessary.
- If the equivalent pipe length will be between 30 and 50m, charge with additional refrigerant according to the equivalent length given in the table below.

	Additional charging amount	Equivalent length	Minimum length
U-100/125/140PEY1	50g/m	50m	5m

- Pump down operation
  - Operate the pump down according to the following procedures.

	Procedure	Remarks
1	Stop operation both outdoor and indoor units.	
2	Remove the cap and hood (bonnet) on the service port of the gas (wide tube) side from the outdoor unit. Then connect the pressure gauge (local supply) to the service port of the gas (wide tube) side.	• Be sure to use the pressure gauge (local supply) which is specific to low pressure measurable.
3	Short-circuit the pump down pin (PUMPDOWN) on the control PCB of the outdoor unit for 1 second or longer. Use a flathead screwdriver and short-circuit the pin.	• If the pump down pin (PUMPDOWN) on the control PCB of the outdoor unit is short circuit, refrigerant recovery control is started in the cooling operation. • The indoor fan is operated in High mode during pump down operation and the compressor drives in 60Hz.
4	When 2 or 3 minutes have passed after the start of outdoor unit operation, fully close the liquid (narrow tube) side valve of the outdoor unit.	• Refrigerant recovery will start. • The LED 1 on the control PCB of the outdoor unit blinks and LED 2 illuminates. • Maintenance function indication ( ) will blink on the LCD display of the wired remote controller (CZ-RTC2).
5	When the pressure gauge installed at the service port reaches the desired pressure of 0.2MPa - 0.1MPa, fully close the gas (wide tube) side valve of the outdoor unit. Then again short-circuit the pump down pin (PUMPDOWN) on the control PCB of the outdoor unit for 1 second or longer.	• If the pump down operation has continued for over 10 minutes or the pump down pin (PUMPDOWN) on the control PCB of the outdoor unit is short circuit for 1 second or longer, the outdoor and indoor units will stop even though the pump down has not completed yet. • Do not operate the outdoor unit until the pressure value reaches negative pressure. Otherwise, this will cause the compressor trouble.
6	Remove the pressure gauge installed at the gas (wide tube) side of the outdoor unit. Then reinstall the cap and hood (bonnet) in the original position once removed in the Step 2 described above.	• The pump down operation is completed.

NOTE

If you normally operate the refrigerant recovery unit, fully open both the liquid and gas valves of the outdoor unit.

ELECTRICAL WIRING

⚠WARNING	This air conditioner must be installed in accordance with national wiring regulations.
	Cables connected to outdoor unit must be approved polychloroprene sheathed type 60245 IEC 57 or H05RN-F/H07RN-F or heavier.
	The units must be connected to the supply cables for fixed wiring by qualified technician. Circuit breaker must be incorporated in the fixed wiring in accordance with the national wiring regulations. The circuit breaker must be approved, suitable for the voltage and current ratings of equipment and have a contact separation by 3mm in all poles. When the supply cable is damaged, it must be replaced by qualified technician.
	Be sure to install a current leakage breaker, main switch and fuse to the main power supply, otherwise electric shocks may result.
	Be sure to connect the unit to secure earth connection. If the earthing work is not carried out properly, electric shocks may result.
	Wiring shall be connected securely by using specified cables and fix them securely so that external force of the cables may not transfer to the terminal connection section. Imperfect connection and fixing leads to fire, etc.

- Ensure to connect the electrical cable connections and clamp the wires securely to the terminal connections using cord clamps so that no undue force is placed on the wires (power source cable, indoor/outdoor connection cables, earth lead wire).
- Do not install a phase advance capacitor for power factor improvement.
  (It does not improve the power factor and will cause abnormal overheating.)
- Do not bind the excess cables together and place them inside this unit.
- Protect the electrical cable with the protective bushing provided so that the cables do no get damaged on the knock hole or etched portions. If there is space between the electrical cables and the protective bushing occurs, seal it accordingly.
- Tie the cables with the provided binding strap so that they do not touch the compressor and the pipes.
- When setting up the cables, inside of unit install properly so that the front panel will not lift up.
  Make sure that front panel mount correctly.
- Use a round type terminal with an insulation sleeve for connecting to the terminal block.
- Use the appropriate screwdriver for tightening the terminal screws.
  Small sized screwdriver damages the head of the screw and cannot tighten it properly.
- There is risk of damaging the screw if the terminal screw is over tightened. Tighten with the appropriate torque.

Screw diameter name	Tightening torque N□m □kgf□m□
M4	1.57 □1.96 □0.16 □0.2□
M5	1.96 □2.45 □0.2 □0.25□

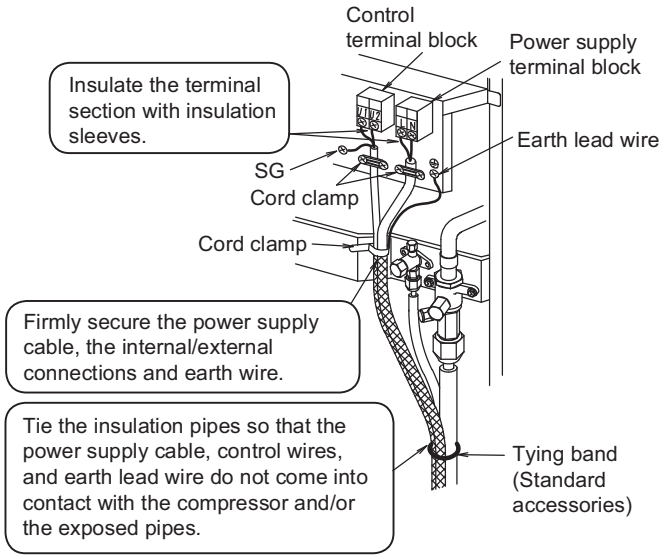

- Direction to pull out wires

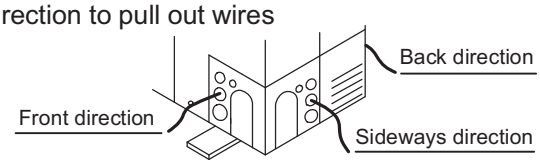

Seal wiring holes after wiring using included protection bush.
(other holes are for connecting conduit pipe)

- Earth lead wire set up

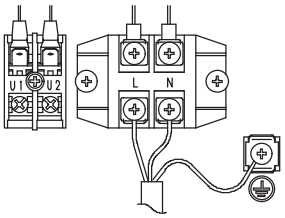

The earth lead wire shall be longer than other lead wires as shown in the figure for electrical safety in case it slips out of the cord from the anchorage.

- Be sure to connect the wires correctly to terminal board with connecting the crimp type ring terminal to the wires.
- If connecting two separate wires to a single crimped terminal, place the two crimped terminal wires together as shown in Fig. A. (If the arrangement shown in Fig. B is used, poor contacts or contact damage may result.)

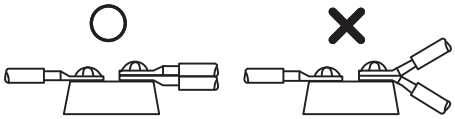

Fig. A (OK) Fig. B (not OK)

OUTDOOR UNIT/3-PHASE MODEL

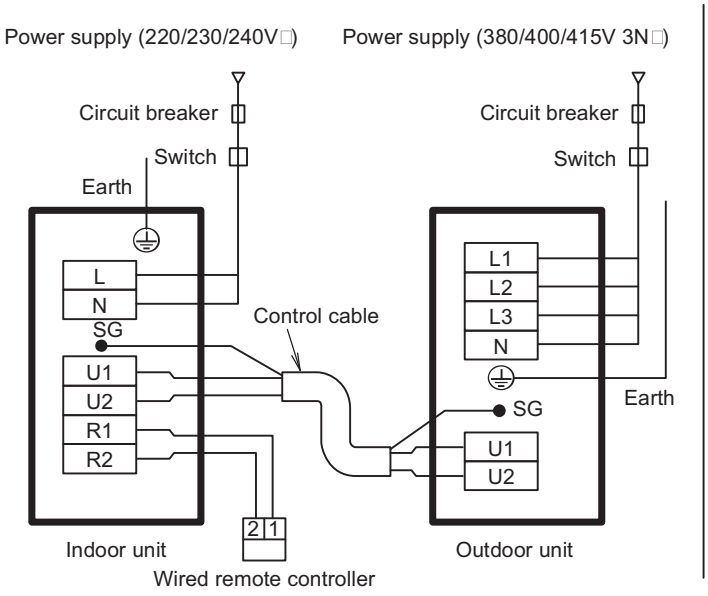

OUTDOOR UNIT/SINGLE-PHASE MODEL

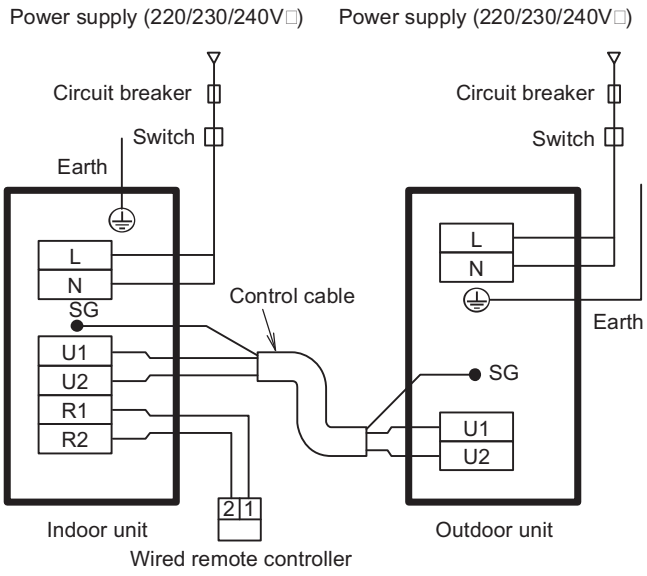

This equipment complies with EN/IEC 31000-3-12 provided that the short-circuit power Ssc is greater than or equals to ※ 2 kVA at the interface point between the user•s supply and the public system. It is the responsibility of the installer or user of the equipment to ensure; by consultation with the distribution network operator if necessary that the equipment is connected only to supply with a short-circuit power Ssc greater than or equals to ※ 2 kVA.

Ssc: Short circuit power

SG : Shows the earth for the shielded cable.

Model name	Power supply (single-phase)	Maximum electric current (A)	※1 Control cable (mm□)	※ 2 Ssc (kVA)	Model name	Power supply (3N□)	Maximum electric current (A)	※1 Control cable (mm□)	※ 2 Ssc (kVA)
U-60PE1E5A	220/230/240V□	18	0.75	4050	—	—	—	—	—
U-71PE1E5A	220/230/240V□	18	0.75	4050	U-71PE1E8A	380/400/415V	7	0.75	※3
U-100PE1E5A	220/230/240V□	25	0.75	6000	U-100PE1E8A	380/400/415V	9	0.75	※3
U-125PE1E5A	220/230/240V□	28	0.75	6000	U-125PE1E8A	380/400/415V	10	0.75	※3
U-140PE1E5A	220/230/240V□	30	0.75	6000	U-140PE1E8A	380/400/415V	11	0.75	※3
U-100PEY1E5	220/230/240V□	25	0.75	5200	U-100PEY1E8	380/400/415V	9	0.75	※3
U-125PEY1E5	220/230/240V□	29	0.75	5800	U-125PEY1E8	380/400/415V	10	0.75	※3
					U-140PEY1E8	380/400/415V	10	0.75	※3

※1 Use a shielded cable for the control cable. Overall extension less than 500m

※3 The following models are intended for professional use.
U-71PE1E8A, U-100PE1E8A, U-125PE1E8A, U-140PE1E8A, U-100PEY1E8, U-125PEY1E8, U-140PEY1E8
Consult with the supply utility for permission of electrical connection.

- Decide the length and size of the power supply cable based on the maximum ampere tabulated above in accordance with the national wiring regulations.
- Select the fuse(s) and/or circuit breaker(s) from the types and ratings suitable for the maximum ampere tabulated above in accordance with the national wiring regulations.
- If capacity of power supply circuit and enforcement are not enough, it can causes the electric shock and a fire.

For the shield part of the shielded cable, twist the end out, crimp it with a round terminal, and connect it to the SG screw. After crimping it with a round terminal, wrap it with insulating tape so there are no spaces and adjust it so the shield part does not touch any live parts.

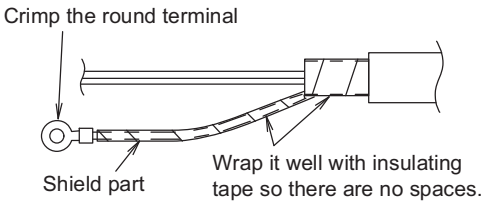

⚠ CAUTION	Be sure that the shield part of the shielded cable does not touch the terminal block or any live parts. Failure to do so may lead to electric shock or fire.

COMBINATION OF INDOOR UNIT CONNECTION

Twin, Triple and Double Twin Type Connections for PE1 Type

- Two, three or four indoor units can be operated simultaneously with a single remote controller.
  Note that individual operation is not possible.
- Master unit and slave unit can be set automatically in twin and triple system.
  No address setting is necessary.
- Applicable •TWIN□and •TRIPLE□combination table.

	Outdoor unit	71 Type	100 Type	125 Type	140 Type
TWIN	combination	U-71 S-36 S-36	U-100 S-50 S-50	U-125 S-60 S-60	U-140 S-71 S-71
TRIPLE	combination	———	U-100 S-36 S-36 S-36	U-125 S-45 S-45 S-45	U-140 S-50 S-50 S-50
DOUBLE TWIN	combination	———	———	U-125 S-36 S-36 S-36 S-36	———

Twin Type Connections for PEY1 Type

- This unit cannot make triple or double twin connections.
- Two indoor units can be operated simultaneously with a single remote control unit.
  Note that individual operation is not possible.
- Master unit and slave unit can be set automatically in twin system.
  No address setting is necessary.
- Applicable •TWIN□combination table.

	Outdoor unit	100 Type	125 Type	140 Type
TWIN	combination	U-100 S-50 S-50	U-125 S-60 S-60	U-140 S-71 S-71

Piping Connections

For PE1 Type

- The following table shows the pipe diameter. (Branch pipe kit should be used)

(unit: mm)

Outdoor unit main pipe diameter (mm)	Branch pipe diameter	Indoor unit combination				
		S-36	S-45	S-50	S-60	S-71
Liquid side : □9.52 Gas side : □15.88	Liquid side	□6.35	□6.35	□6.35	□9.52	□9.52
	Gas side	□12.7	□12.7	□12.7	□15.88	□15.88
Branch pipe kit (option)	TWIN, DOUBLE TWIN	CZ-P155BK1				
	TRIPLE	CZ-P3HPC2				

- The following table shows the equivalent pipe lengths and height differences.

		SYMBOLS			SPEC
		TWIN	TRIPLE	DOUBLE TWIN	
Total pipe length		L+La+Lb	L+La+Lb+Lc	L+La+Lb+Lc+Ld+Le+Lf	U-60/71P : 50m U-100/125/140P : 75m
Maximum branch pipe length		La or Lb	La or Lb or Lc	La+Lc or La+Ld or Lb+Le or Lb+Lf	Less than 15m
Maximum branch pipe length difference		La □ Lb La - Lb	La □ Lb □ Lc La - Lb Lb - Lc La - Lc	Lb+Lf → MAX La+Lc → MIN (Lb + Lf) - (La + Lc)	Less than 10m
Maximum pipe length difference of branch pipe 1 (DOUBLE TWIN)		———	———	Lb □ La Lb - La	Less than 10m
Maximum pipe length difference of branch pipe 2 (DOUBLE TWIN)		———	———	Ld □ Lc Lf □ Le Ld - Lc Lf - Le	Less than 10m
Height difference	Outdoor located higher installation	H1			Less than 30m
	Outdoor located lower installation	H1			Less than 15m
Height difference between indoor units		H2	H2 or H3 or H4	H2 or H3 or H4 or H5 or H6 or H7	Less than 0.5m

For PEY1 Type

- The following table shows the pipe diameter. (Branch pipe kit should be used)

(unit: mm)

Outdoor unit main pipe diameter (mm)	Branch pipe diameter	Indoor unit combination		
		S-50	S-60	S-71
Liquid side : □9.52 Gas side : □15.88	Liquid side	□6.35	□9.52	□9.52
	Gas side	□12.7	□15.88	□15.88
Branch pipe kit (option)	TWIN	CZ-P155BK1		

- The following table shows the equivalent pipe lengths and height differences.

		SYMBOLS	SPEC
		TWIN	
Total pipe length		L+La+Lb	Less than 50m
Maximum branch pipe length		La or Lb	Less than 15m
Maximum branch pipe length difference		La □ Lb La - Lb	Less than 10m
Height difference	Outdoor located higher installation	H1	Less than 30m
	Outdoor located lower installation	H1	Less than 15m
Height difference between indoor units		H2	Less than 0.5m

(TWIN type)

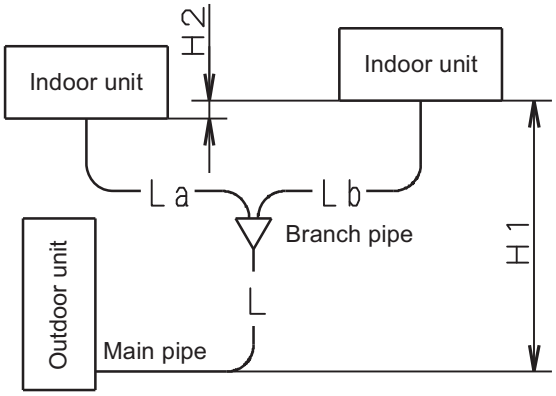

(TRIPLE type)

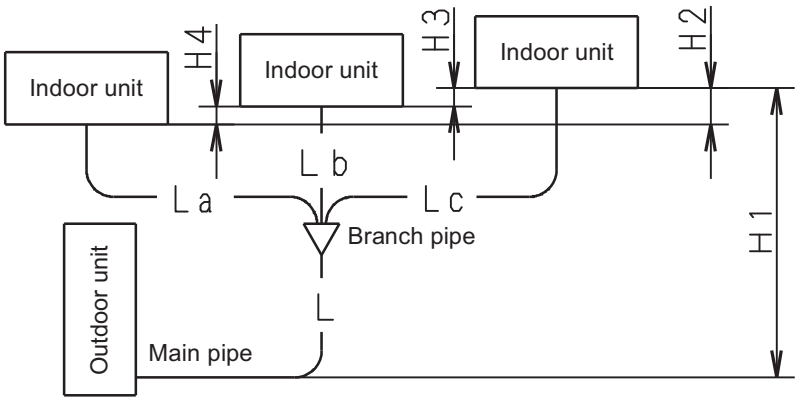

(DOUBLE TWIN type)

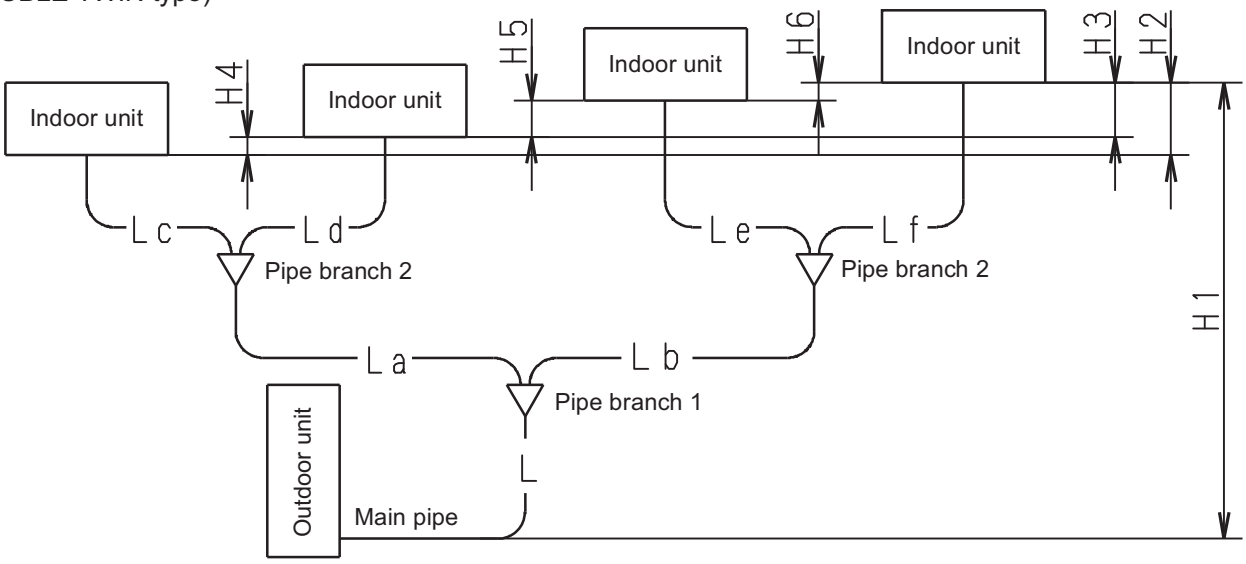

□Use the main pipe to gain any rise or fall required for the pipes.
□The number of bends should be 8 or less in a single system, and 15 or less overall.
□Branch pipes should be positioned horizontally.

Refrigerant charging

For PE1 Type

- For the twin connection, the amount of refrigerant required for pipe length 30m has been included in this unit at the factory while that required for pipe length 20m has been included for the triple/double-twin connections. No additional charge is required for the first 30m pipe length in the case of the twin connection and for the first 20m in the case of the triple/double-twin connections. The amount of included refrigerant for each model is listed on NAME PLATE.
  Make additional charges by adding up pipe length in an order of main pipe (L) → branch pipe (La → Lb → Lc wide diameter) and then selecting the amount of refrigerant corresponding to the remaining (after 30m for the twin connection and after 20m for the triple/double-twin connections) liquid side pipe diameter and pipe length from the below table.

(unit: mm)

Liquid pipe diameter	Addition amount of refrigerant [g/m]
□6.35	20
□9.52	50

For PEY1 Type

- For the twin connection, the amount of refrigerant required for pipe length 30m has been included in this unit at the factory. No additional charge is required for the first 30m pipe length in the case of the twin connection. The amount of included refrigerant for each model is listed on NAME PLATE.
  Make additional charges by adding up pipe length in an order of main pipe (L) → branch pipe (La → Lb wide diameter) and then selecting the amount of refrigerant corresponding to the remaining (after 30m for the twin connection) liquid side pipe diameter and pipe length from the below table.

(unit: mm)

Liquid pipe diameter	Addition amount of refrigerant [g/m]
□6.35	20
□9.52	50

Wiring

For PE1 Type

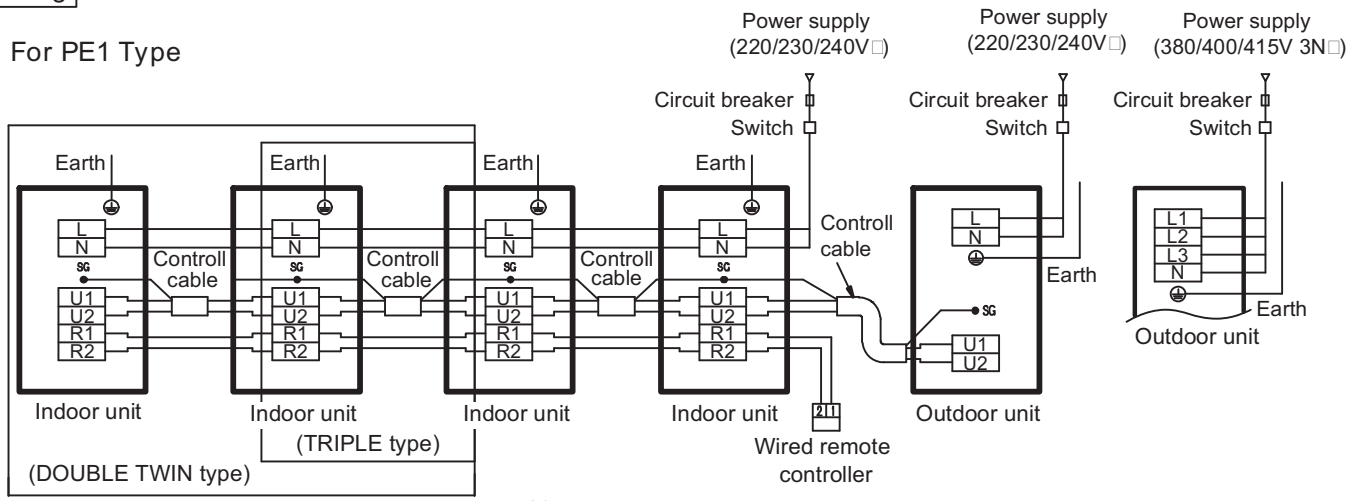

※ SG : Shows the earth for the shielded cable.

For PEY1 Type

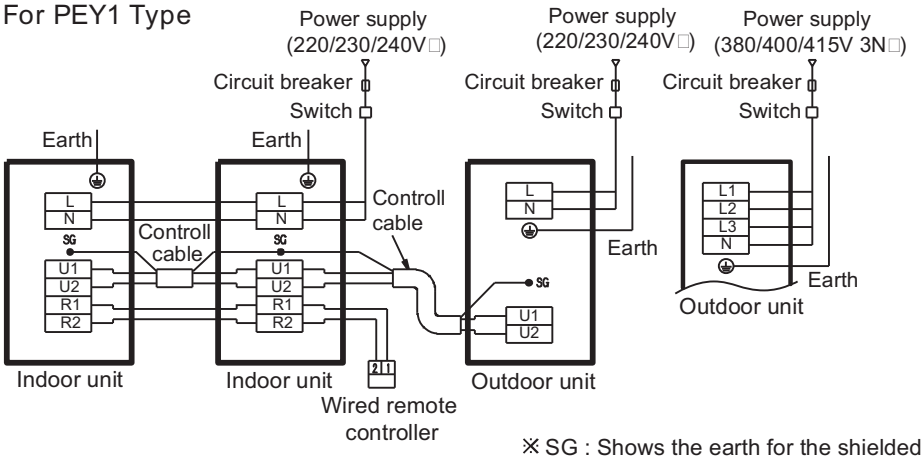

※ SG : Shows the earth for the shielded cable.

PRECAUTIONS REGARDING TEST RUN

Check Before Test Run

	Content check
Power supply cable Indoor/outdoor connection wire Earth wire	● Is the wire set up and connected as described in the instructions? Check for any phase sequence. ● Are the wire connection•s screws loose? ● Is the open and close device / leakage breaker installed? ● Is the power supply cable•s thickness and length appropriately measured as described in the instructions? ● Is it earthed (grounded)? ● Check that the insulation resistant value is more than 1 MΩ. Use the 500 V mega-testers to measure the insulation. Do not use the mega-tester for any other circuit except for voltage of 220V to 240V or 380-415V. ● Are the wire connections for the indoor/outdoor units connected as described in the instructions? Are there any looped wires? ● Was the •N-phase□surely connected when connecting the power supply wire on the three-phase model? If N-phase is not connected, only the fan may repeat turning ON/OFF without the compressor operating. In that case, check if there is any problem with N-phase connection.
Refrigerant pipe	● Is the piping installed as described in the instructions? ● Are the pipes sizes appropriate? ● Does the pipe•s length adhere to the specifications? ● Is the branch pipe slant being appropriately done as described in the instructions? ● Was vacuum removal sufficiently carried out? ● Was the leak tightness test carried out with nitrogen gas? Use the testing pressure of 3.8 MPa (PEY1 type : 4.15 MPa). ● Is the piping insulation material appropriately installed? (Insulation material is necessary for both gas and liquid piping.) ● Is the 3-way valve for the liquid side and gas side open?

- Always be sure to use a properly insulated tool to operate the short-circuit pin on the circuit board. (Do not use your finger.)
- Never switch the power supply ON until the installation has completed.
- Supply electrical current through all indoor units and check the voltage.
- Supply electrical current through all the outdoor units and check each inter-phase voltage.
- Before the test run, ensure to check that the 3-way valve is open. Operating while the valve is closed causes the compressor to fail.

Test Run Procedure

- If there are duplicated system addresses, or if the settings for the Nos. of the indoor units are not consistent, an alarm will occur and the system will not start.
- Switch the power supply ON both indoor and outdoor units.
- Short-circuit CHK pin on the outdoor main PCB.
  Do not remove CHK pin until test run is completed.
  Removing CHK pin stops test run.
- Short-circuit RUN pin on the outdoor main PCB for one second or longer.
  Factory setting is cooling operation mode and cooling operation test run starts.
  If heating operation starts, short-circuit both right side and centre of the MODE pin (centre and COOL) continuously.
- Ensure to conduct a test run. In addition, be sure to run the cooling operation test run for at least 20 minutes before startingthe heating operation test run.
- To conduct heating operation test run, short-circuit left side and centre of the MODE pin (centre and HEAT) continuously.
- Removing CHK pin•s and MODE pin□s short-circuit stops test run.
- For the test run using remote control unit, please see installation manual included with the remote control unit.

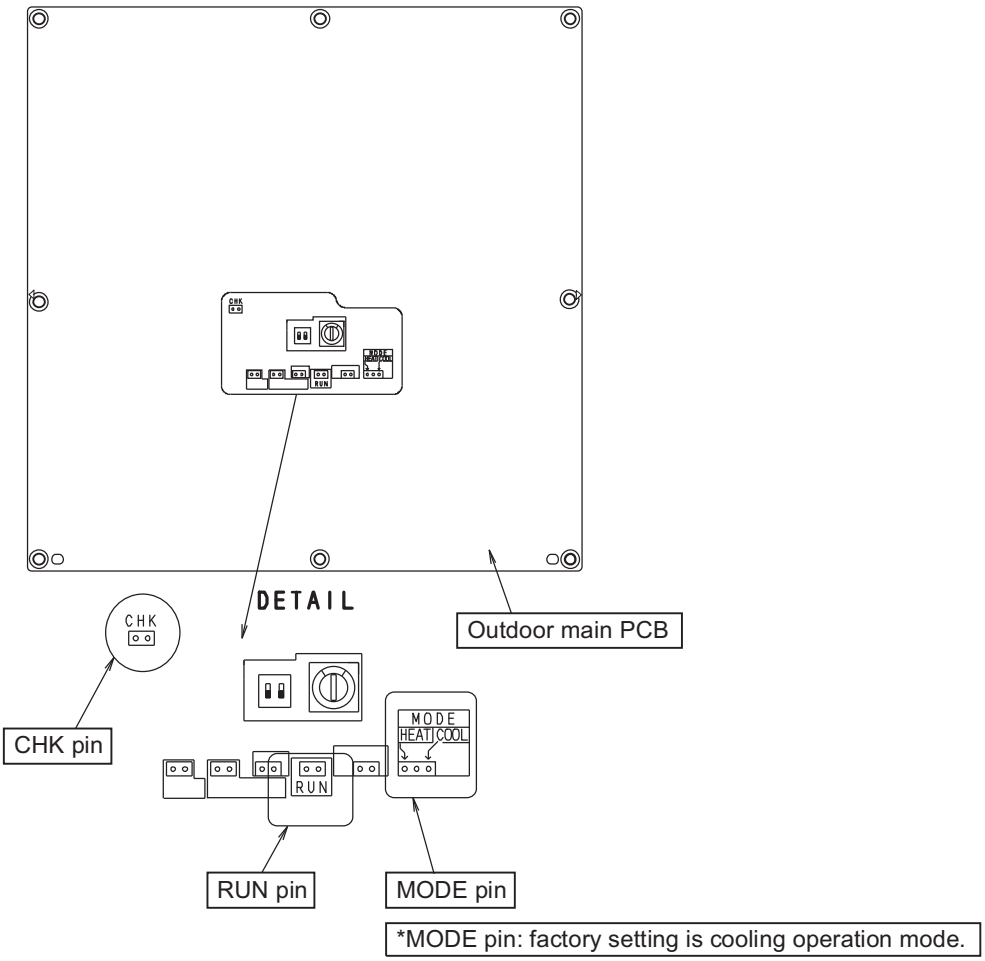

CHECKS AFTER INSTALLATION HAVE COMPLETED

- Check the following items after completing installation.
  - ☐ Is there a short circuit with the intake air flow?
  - ☐ Is the insulation secure? (Refrigerant piping)
  - ☐ Are there any errors with the wiring?
  - ☐ Are the terminal screws loose? Tightening torque (Unit: N □m □kgf □m□)
    M4□ 1.57 - 1.96 □0.16 - 0.2□, M5... 1.96 - 2.45 □0.2 - 0.25□
  - ☐ Is the drain water flowing smoothly?
  - ☐ Is the insulation material properly installed?
  - ☐ Is the earth wire securely connected?
  - ☐ Is the front panel and the indoor unit air conditioner firmly fixed and was the installation completed without any leakage from the refrigerant?
  - ☐ Are the indoor and outdoor units secured firmly installed with bolts at secured locations?

REGARDING DELIVERY TO THE CUSTOMER

- Request the customer to review the instruction manual and explain the operating method for the product.
- In addition, it is also recommended that regular inspection checks are agreed upon for maintenance.

User inspection places
- □Filter and grille cleaning
- □Exterior cleaning

Serviceman inspection places
- □Check the operating status
- □Clean the drain pan or things related to the water discharge
- □Heat exchanger cleaning

Refer to the installation instruction manual provided with the indoor unit for the specifications on the indoor unit installation.

■ Optional Distribution □oint Kits

● CZ-P155BK1

- Prior to undertaking the installation work, read carefully through the •Installation Instructions□for the air conditioner and this •Installation Instructions□.
- This line branch pipe is used for the R410A refrigerant.

1. Details of parts supplied

Unit : mm (in.)

1 Liquid side branch pipe (inner diameter)

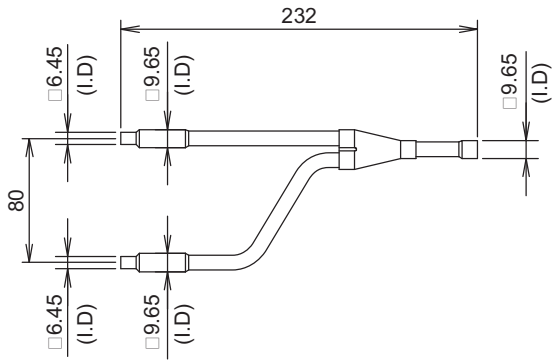

2 Gas side branch pipe (inner diameter)

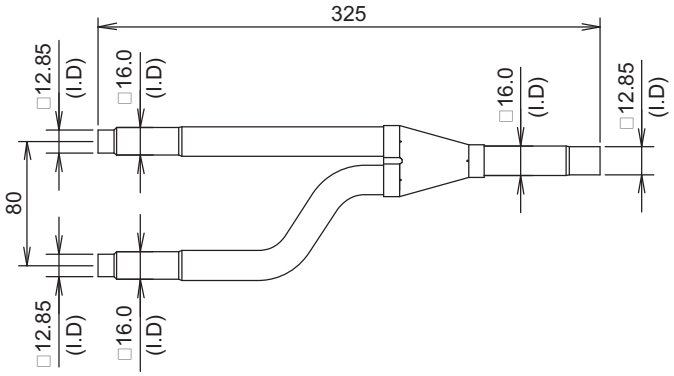

3 Thermal insulator (Gas side)	4 Thermal insulator (Liquid side)	5 Installation Instructions
1 pc	1 pc	1 sheet
		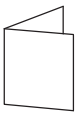

2. Indoor/Outdoor unit piping installation

- For details on the allowable amount of refrigerant, allowable pipe lengths and allowable elevation difference, refer to the Installation Instructions provided with the outdoor unit.
- The diameter of the piping for the indoor and outdoor units differs depending on the model of the unit. (Refer to respective diameter of the piping for the indoor and the outdoor units and install accordingly.) Use pipe cutters to cut the appropriate connecting section of the branch pipe to match the diameter of piping for the indoor and outdoor units.

Pipe diameter for indoor unit

Cooling capacity of the indoor unit	Liquid side pipe diameter	Gas side pipe diameter
□6.0 kW	□6.35	□12.7
6.0 kW ≤	□9.52	□15.88

Pipe diameter for outdoor unit

Cooling capacity of the outdoor unit	Liquid side pipe diameter	Gas side pipe diameter
7.1 kW - 15.5 kW	□9.52	□15.88

2-1 Installation Instructions

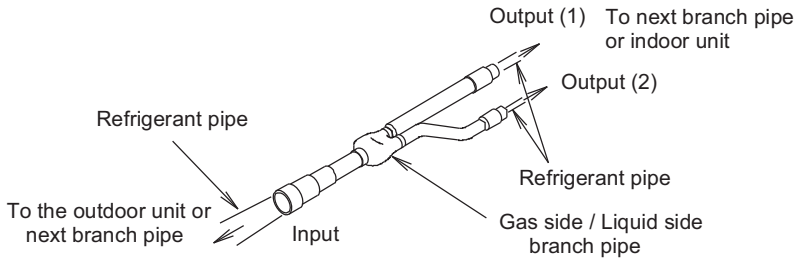

- If the size of the selected refrigerant pipe and the size of the branch pipe differ, cut the connecting section with pipe cutters per the illustration at right.
  (Be sure to deburr and remove any impurities on the cutting surface.)

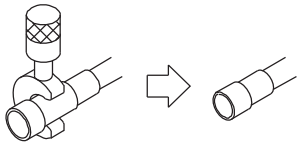

2-2 Installation precaution

Position the branch pipe on the appropriate horizontal and vertical plane so that branch flow is even.

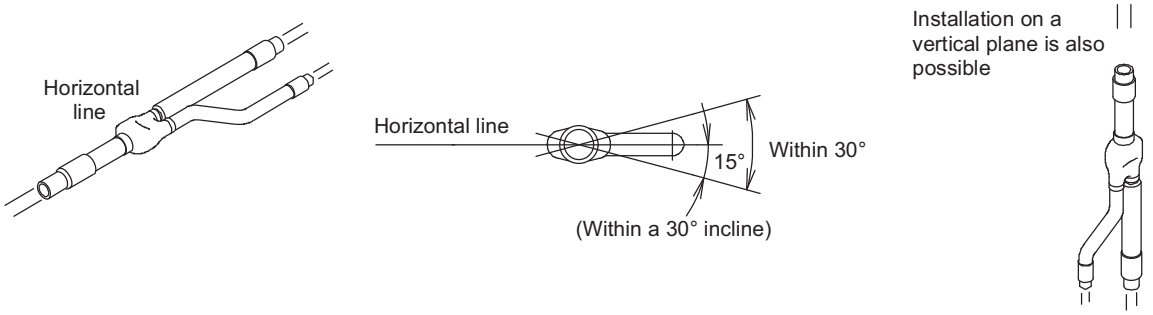

2-3 Precautions at connecting points

After removing any impurities at the mouth of the pipe or the connecting points, be sure to clean the inside of the pipe with nitrogen gas (nitrogen displacement) to prevent oxide scale forming on the inner surface of the pipe. This step is extremely important when making the connections in the refrigerant piping. (Do not use an antioxidant)

3. Insulation directions

Gas side / Liquid side branch pipe insulation.

Note: Use insulating material that can tolerate 120°C on the gas side.

1) Insulate the gas side / liquid side of the branch pipe with thermal insulator.

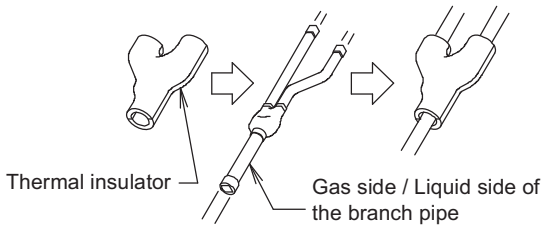

2) Wrap tape all around the areas where the insulating materials are joined in order to seal it.

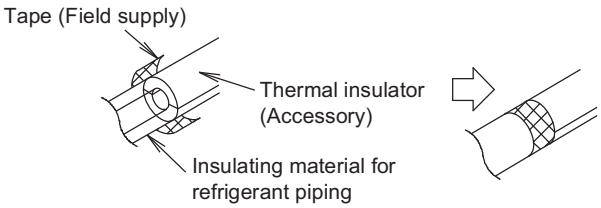

3) Wrap a wide PVC tape all around the surfaces where the ends of the branch pipe and insulating materials are abutted so as to close any gaps.

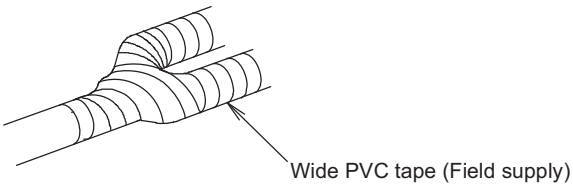

Note: Do not use any adhesive agents on the connections between thermal insulator.

● CZ-P3HPC2

Unit : mm

CZ-P3HPC2 (for simultaneous Triple)

Liquid distribution joint for liquid tube

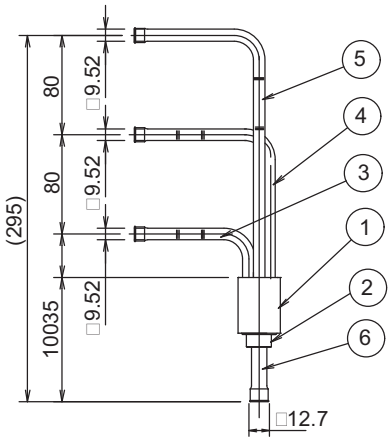

1

Gas distribution joint for gas tube

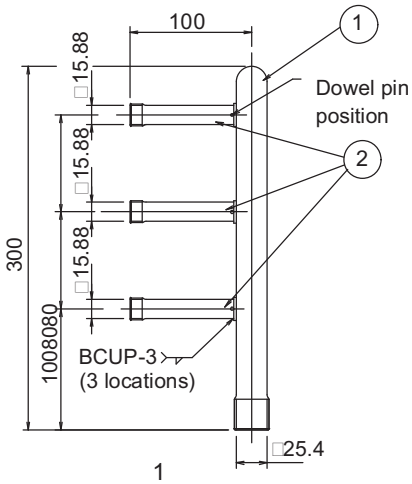

1

Liquid-tube side tube connector

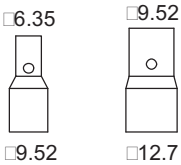

3 1

Gas-tube side tube connector

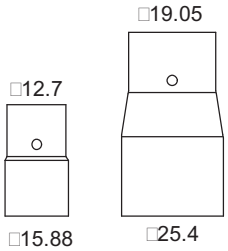

3 1

Gas-tube side tube connector

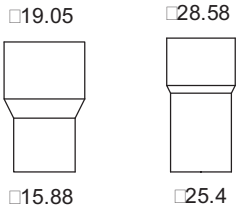

2 1

Thermal insulation for liquid distribution joints

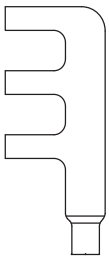

1

Thermal insulation for gas distribution joints

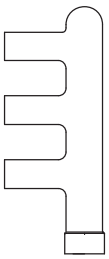

1

■ Installing Distribution □oint Kit (for Triple) (CZ-P3HPC2)

- Check the system combination before installing the distribution joints.
- Three indoor units must be installed within the same room.
- Use the supplied tube connectors to adjust the tube sizes of the distribution joints.

How to Install Distribution □oints

Use the supplied distribution joints to complete refrigerant tubing work.
Install distribution joints so that the tubes are horizontal after the branch point.

Orientation of distribution joints

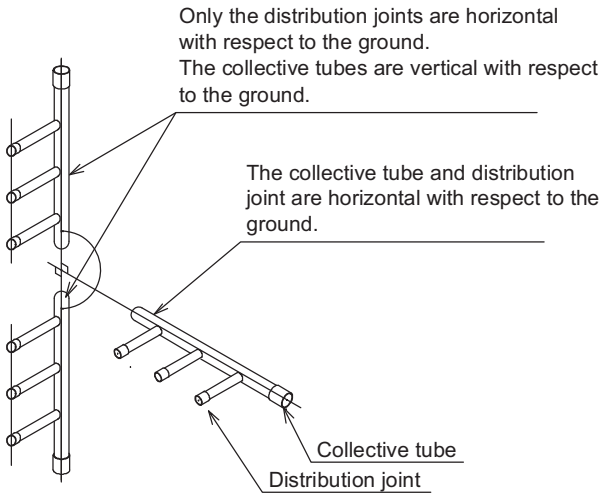

□Gas tube side□

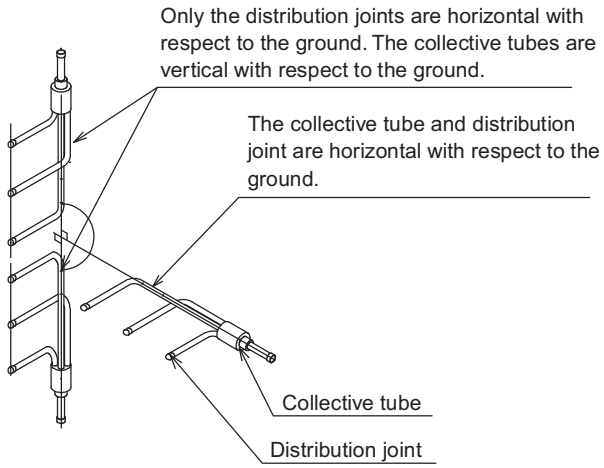

□Liquid tube side□

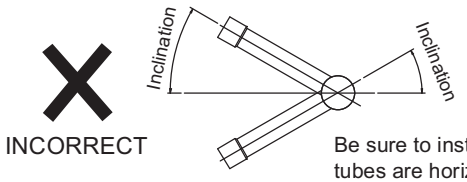

INCORRECT

Be sure to install so that the tubes are horizontal after the branch point.

Length requirement for strainer on main distribution tube side

Attach a straight tube 500 mm or longer to the main tubing side of the distribution joint (for both liquid and gas tubing).

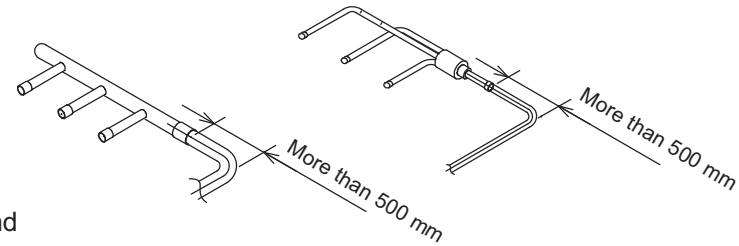

Tubing insulation

Be sure to apply thermal insulation to both the liquid and gas tubing.
Depending on the conditions inside the ceiling, condensation may form on the insulation material. If high temperatures and high humidity are expected to occur inside the ceiling, add glass wool (16-20 kg/m^3, with a thickness of 10 mm or more) to the below insulation materials and apply sufficient thermal insulation.

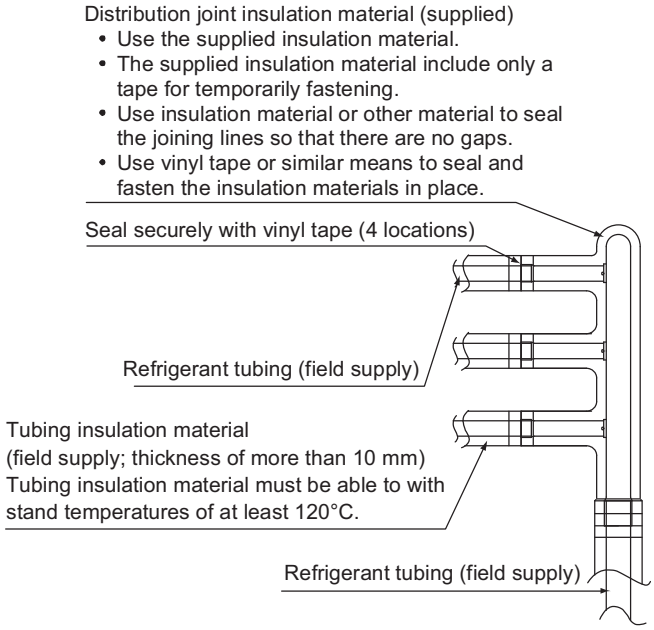

1. 4-Way Cassette Type (U1)

■ SELECTING THE INSTALLATION SITE

Indoor Unit

AVOID:

- areas where leakage of flammable gas may be expected.
- places where large amounts of oil mist exist.
- direct sunlight.
- locations near heat sources which may affect the performance of the unit.
- locations where external air may enter the room directly. This may cause condensation on the air discharge ports, causing them to spray or drip water.
- locations where the remote controller will be splashed with water or affected by dampness or humidity.
- installing the remote controller behind curtains or furniture.
- locations where high-frequency emissions are generated.

DO:

- select an appropriate position from which every corner of the room can be uniformly cooled.
- select a location where the ceiling is strong enough to support the weight of the unit.
- select a location where tubing and drain pipe have the shortest run to the outdoor unit.
- allow room for operation and maintenance as well as unrestricted air flow around the unit.
- install the unit within the maximum elevation difference above or below the outdoor unit and within a total tubing length (L) from the outdoor unit as detailed in the Installation Instructions provided with the outdoor unit.
- allow room for mounting the remote controller about 1 m off the floor, in an area that is not in direct sunlight or in the flow of cool air from the indoor unit.

4-Way Cassette Type

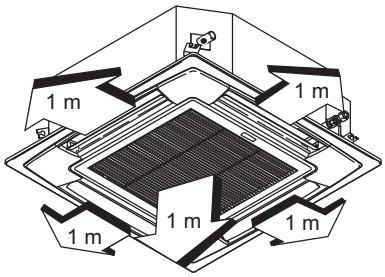

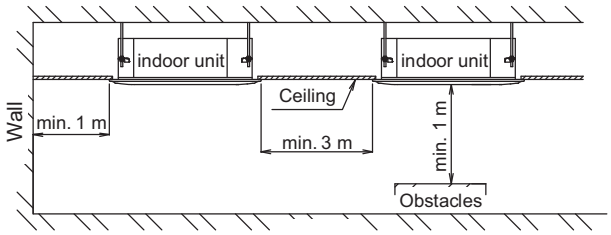

■ HOW TO INSTALL THE INDOOR UNIT

■ 4-Way Cassette Type (U1 Type)

Note: For DC Fan Tap Change Procedure for 4-Way Cassette, see page 1-330.

Preparation for Suspending

This unit uses a drain pump. Use a carpenter's level to check that the unit is level.

Suspending the Indoor Unit

(1) Fix the suspension bolts securely in the ceiling using the method shown in the diagrams (Figs. 1-7 and 1-8), by attaching them to the ceiling support structure, or by any other method that ensures that the unit will be securely and safely suspended.

(2) Follow Fig. 1-8 and Table 1-4 to make the holes in the ceiling.

Table 1-4 Unit: mm

Type \ Length	A	B	C	D
36, 45, 50, 60, 71, 100, 125, 140	786	745	860 to 910	860 to 910

(3) Determine the pitch of the suspension bolts using the supplied full-scale installation diagram. The diagram and table (Fig. 1-9 and Table 1-5) show the relationship between the positions of the suspension fitting, unit, and panel.
Use the nut (field supply) and washer (supplied) for upper and lower position of the suspension lug.

Table 1-5 Unit: mm

Type \ Length	A	B	C	D	E
36, 45, 50, 60, 71	121	171	256	180	130
100, 125, 140	121	171	319	180	130

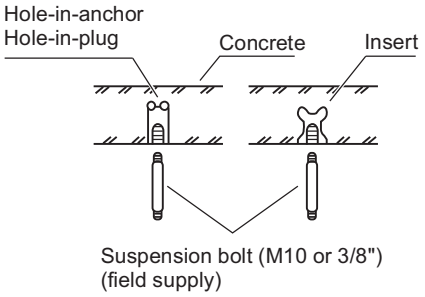

Fig. 1-7

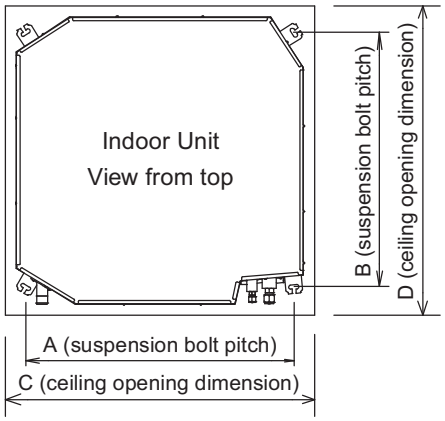

Fig. 1-8

Unit: mm

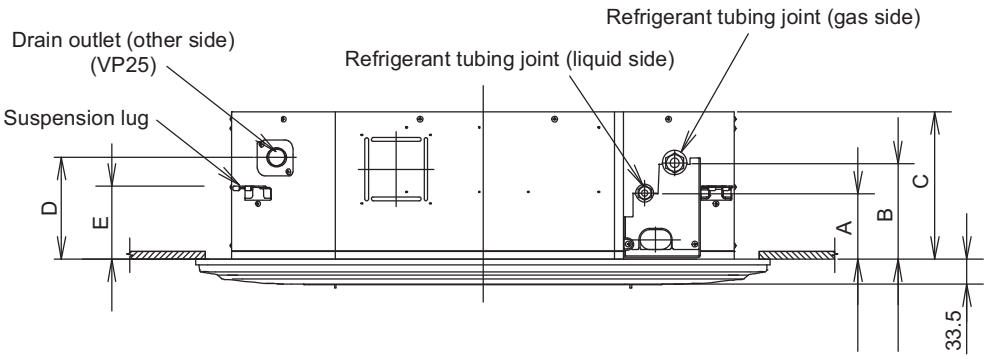

Fig. 1-9

Placing the Unit Inside the Ceiling

This unit is equipped with the drain pump. Check a tape measure or carpenter's level.
Before installing the ceiling panel, complete the work of drain pipe and refrigerant pipe installation.

(1) When placing the unit inside the ceiling, determine the pitch of the suspension bolts using the supplied full-scale installation diagram. (Fig. 1-10)
Tubing and wiring must be laid inside the ceiling when suspending the unit. If the ceiling is already constructed, lay the tubing and wiring into position for connection to the unit before placing the unit inside the ceiling.
(2) The length of suspension bolts must be appropriate for a distance between the bottom of the bolt and the bottom of the unit of more than 18 mm as shown in Fig. 1-10.
(3) Thread the 3 hexagonal nuts and 2 washers (field supply) onto each of the 4 suspension bolts as shown in Fig. 1-11. Use 1 nut and 1 washer for the upper side, and 2 nuts and 1 washer for the lower side, so that the unit will not fall off the suspension lugs.
(4) Adjust so that the distance between the unit and the ceiling bottom is 12 to 17 mm. Tighten the nuts on the upper side and lower side of the suspension lug.
(5) Remove the protective polyethylene used to protect the fan parts during transport.
(6) Check with a tape measure or carpenter's level.

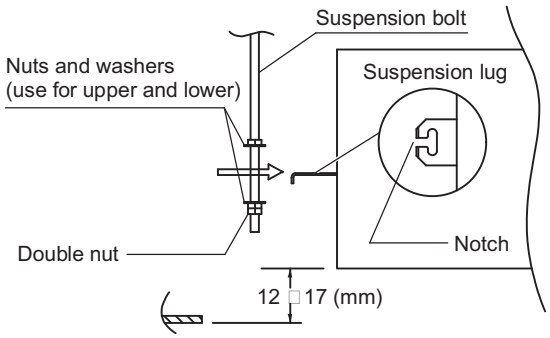

Fig. 1-11

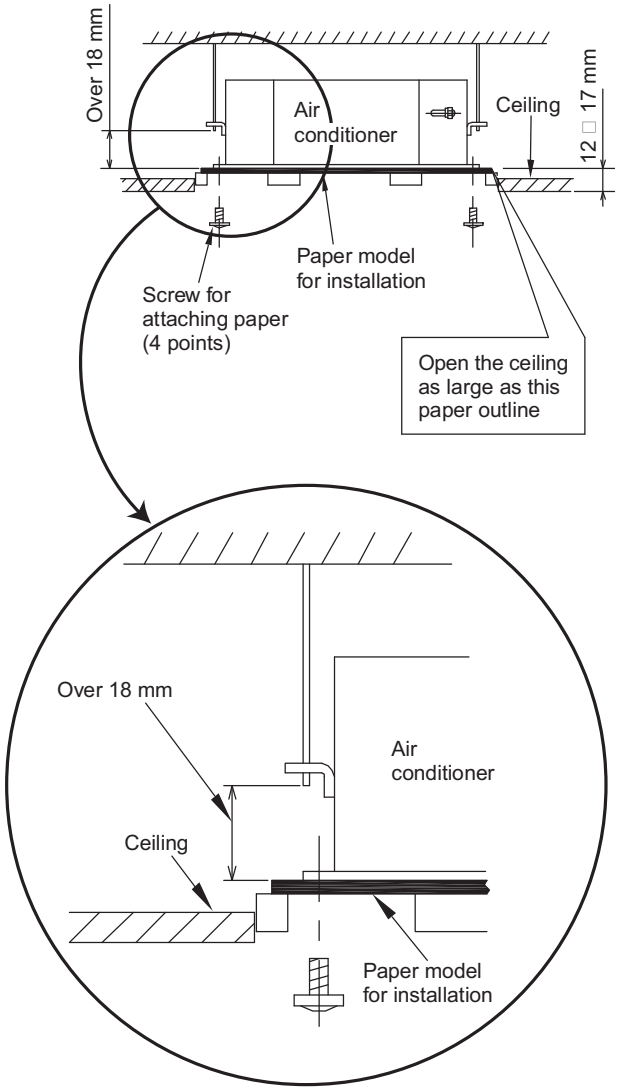

Full-scale installation diagram
(printed on top of container box)

Fig. 1-10

Installing the Drain Pipe

Before Performing the Installation Drain Piping

(1) Limitations of Raising the Drain Pipe Connection

CAUTION

- The drain pipe can be raised to a maximum height of 850 mm from the bottom surface of the ceiling. Do not attempt to raise it higher than 850 mm. Doing so will result in water leakage. (Fig. 1-12)

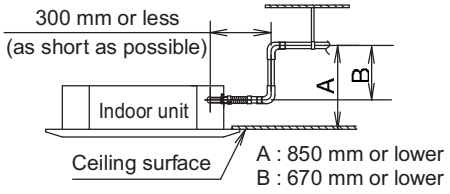

* Length of supplied drain pipe = 250 mm

Fig. 1-12

(2) Limitations of Drain Pipe Connection

CAUTION

- Do not install the drain pipe with an upward slant from the drain port connection. This will cause the drain water to flow backward and leak when the unit is not operating. (Fig. 1-13)
- Do not install an air bleeder as this may cause water to spray from the drain pipe outlet. (Fig. 1-13)
- Do not provide U-trap or bell-shaped trap in the middle of the drain pipe. Doing so will cause abnormal sound. (Fig. 1-13)
- Make sure the drain pipe has a downward slant (1/100 or more; downward from drain port connection). (Fig. 1-14)

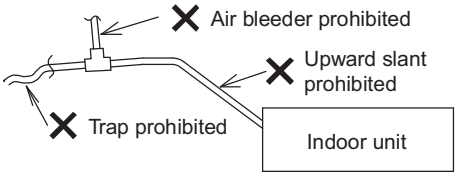

Fig. 1-13

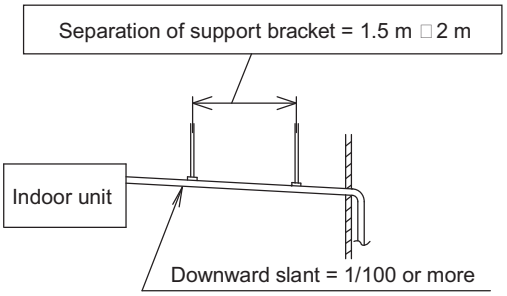

Fig. 1-14

(3) Limitations of Drain Hose Connection

CAUTION

- Do not bend the supplied drain hose 90□or more. Bend it less than 45□ (Fig. 1-15)
- Do not make a trap in the middle of the supplied drain hose. Doing so will cause abnormal sound. (Fig. 1-16)

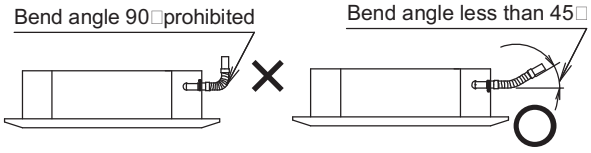

Fig. 1-15

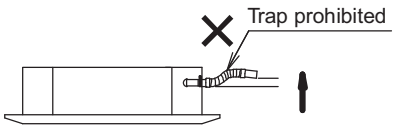

Fig. 1-16

Installing the Drain Pipe

CAUTION

- Do not apply force to the drain port when connecting the drain pipe. Install and fix it near the indoor unit as close as possible.
- Do not use adhesive when connecting the drain port pipe and the drain hose.

(1) How to Install the Drain Pipe

1) First insert the supplied hose band into the drain port pipe. Then make sure the head of the screw is facing toward a technical engineer when placing the screw of the hose band at an upward angle.
2) Insert the soft PVC socket of the supplied drain hose to the drain port pipe. Do not use adhesive when connecting the drain hose to the drain port pipe. Insert it until the tip of the drain hose contacts the circular projection rib of the drain port pipe.
3) Move the hose band so that the center position of the hose band can be placed approx. 30 mm away from the external plate of the indoor unit. (Fig. 1-17)
4) Screw the drain hose tightly facing the screw of the hose band upward. (Torque: 2.5 N·m - 3.4 N·m) (If the screw is tightened beneath the drain hose, the troubles will be generated.) Pay attention not to make hose band overlap the circular projection rib and the sealed circulation projection of the drain port pipe.
5) Apply approx. 2 g of adhesive on both sides of the drain hose without connection of the hard PVC socket and the hard PVC joint (VP25) in the local supply.
6) Connect the drain hose and the hard PVC joint so that the adhesive area of both sides can be overlapped. Wipe off the protrusion-adhesive with a soft cloth.

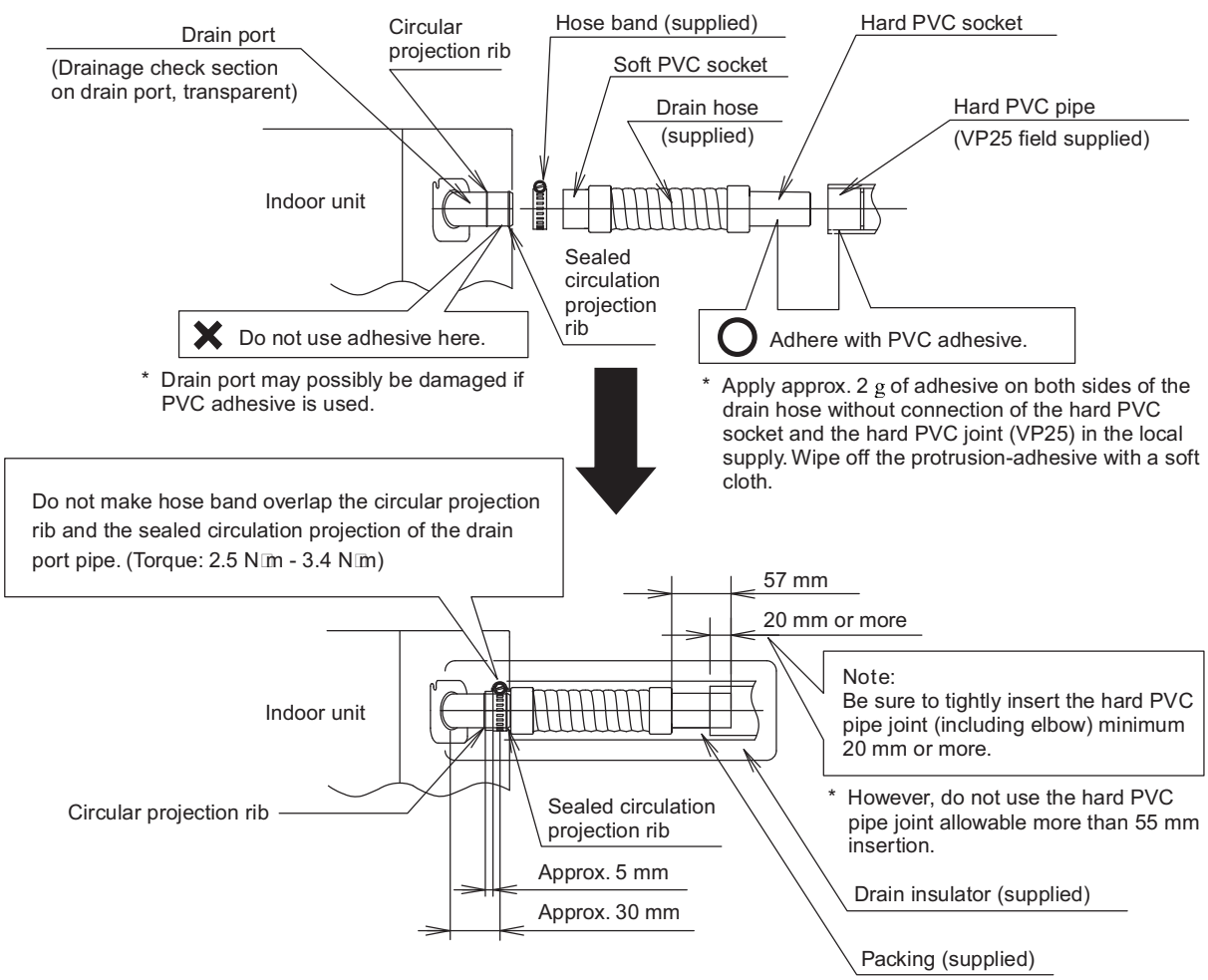

* After checking the drainage, wrap the supplied packing and drain pipe insulator around the pipe.

Fig. 1-17

Checking the Drainage

CAUTION Be careful since the fan will start when you short the pin on the indoor control board.

After wiring and drain piping are completed, use the following procedure to check that the water will drain smoothly. For this, prepare a bucket and wiping cloth to catch and wipe up spilled water.

(1) Connect power to the power terminal board (L, N terminals) inside the electrical component box.
(2) Slowly pour about 1,200 cc of water into the drain pan to check drainage. (Fig. 1-18)
(3) Short the check pin (CHK) on the indoor control board and operate the drain pump. Check the water flow through the transparent drain pipe and see if there is any leakage.
(4) When the check of drainage is complete, open the check pin (CHK) and remount the tube cover.
(5) Checkpoint after installation

After installation of indoor and outdoor units, panels and electrical wiring, check the following items.

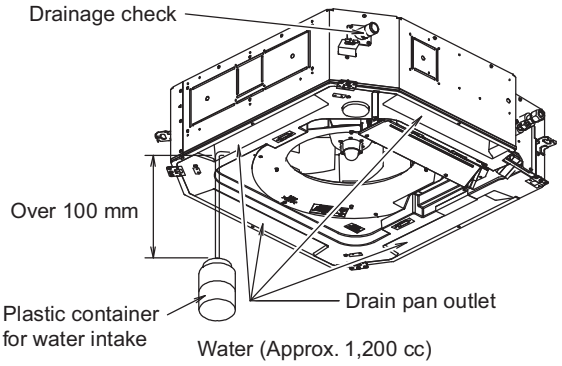

Fig. 1-18

Checkpoint		Symptom	Check	Remark
1	Make sure whether indoor and outdoor units are correctly installed.	Fall, vibration, noise		
2	Make sure whether gas leakage is tested.	No cooling, no heating		
3	Make sure whether insulation is completed. (Refrigerant piping and drain piping)	Water leakage		
4	Make sure whether drain water is running smoothly.	Water leakage		
5	Make sure whether the power voltage matches the nameplate.	Inoperative, burnout		
6	Make sure whether there is miswiring or incorrect connection.	Inoperative, burnout		
7	Make sure whether the ground construction is completed.	Ground leakage		
8	Make sure whether the wire gauge is followed by the recommended specifications.	Inoperative, burnout		
9	Make sure whether the air intake and air outlet of the indoor and outdoor units are sealed by obstacles.	No cooling, no heating		

Important Note for Wiring 4-Way Cassette Type

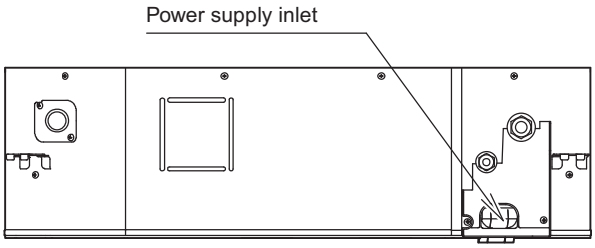

(1) The power supply inlet is located at the lower area of the refrigerant tubing side of the unit. The electrical component box is located at the air intake of the bottom of the unit.

(2) Before installing the ceiling panel, be sure to carry out the wiring connection.

(3) Remove the lid located on the bottom of the indoor unit attaching the electrical component box by unscrewing the philip head tapping screws (×2).

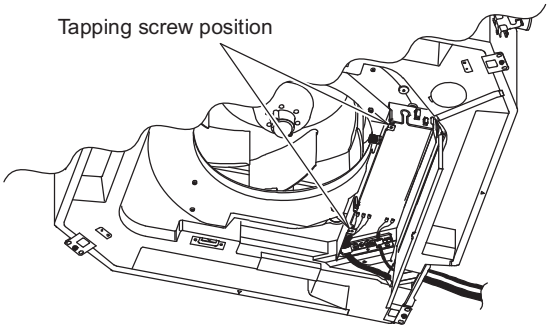

(4) Lead the wires from the power supply inlet to the unit. Be sure to lead the wires through the power supply inlet. Make sure that no wire is caught between the indoor unit and ceiling panel. Otherwise, the unit may cause a fire.

(5) Connect the wires into the terminals through the power supply inlet for the electrical component box.
Fix the wires with a clamping clip.

(6) Reinstall the lid of the electrical component box in its original position with paying attention not to have the wires caught in the lid.
Refer to □1-10. Electrical Wiring□

How to Install the Ceiling Panel

(1) Removing the air-intake grille

1) Remove the 2 screws on the latch of the air-intake grille. (Fig. 1-19) (Reattach the air-intake grille after installation of the ceiling panel.)
2) Slide the air-intake grille catches in the direction shown by the arrows ① to open the grille. (Fig. 1-19)

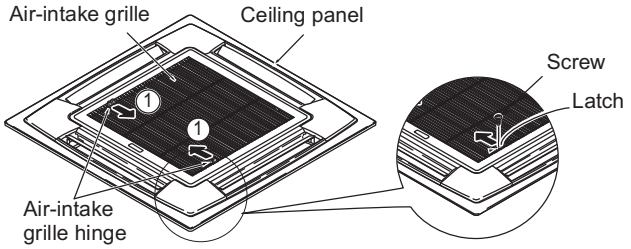

Fig. 1-19

3) With the air-intake grille opened, remove the grille hinge from the ceiling panel by sliding it in the direction shown by the arrow ② . (Fig. 1-20) (Reattach the air-intake grille after installation of the ceiling panel.)

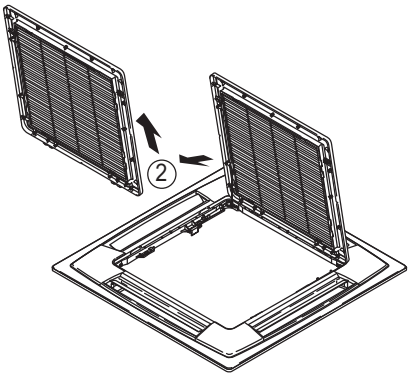

Fig. 1-20

(2) Removing the corner cover

Slide the corner cover in the direction of the arrow ① and remove it.

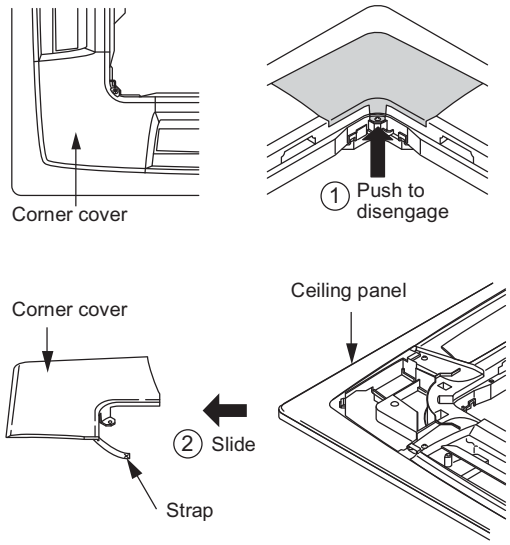

Fig. 1-21

(3) Installing the ceiling panel

The power must be turned ON in order to change the flap angle. (Do not attempt to move the flap by hand. Doing so may damage the flap.)

1) Hang the temporary latches on the inside of the ceiling panel to the receptacle on the unit to temporarily attach the ceiling panel in place. (Fig. 1-22)

- The ceiling panel must be installed in the correct direction relative to the unit. Align the REF. PIPE and DRAIN marks on the ceiling panel corner with the correct positions on the unit.
- When removing the ceiling panel, push the temporary latches outward while holding the ceiling panel. (Fig. 1-22)

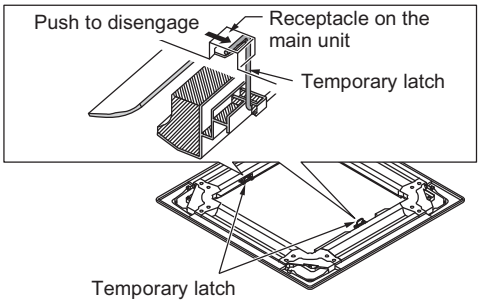

Fig. 1-22

2) Align the panel installation holes and the unit screw holes.
3) Tighten the supplied washer head screws at the 4 panel installation locations so that the panel is attached tightly to the unit. (Fig. 1-23)

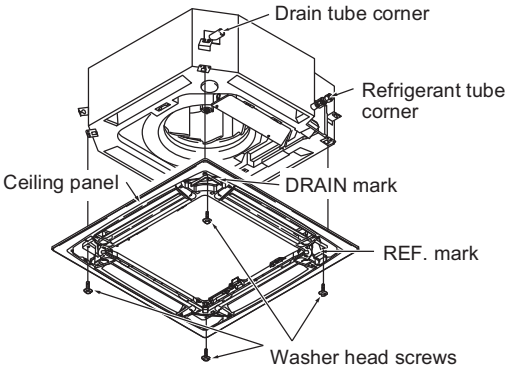

Fig. 1-23

4) Check that the panel is attached tightly to the ceiling.

- At this time, make sure that there are no gaps between the unit and the ceiling panel, or between the ceiling panel and the ceiling surface. (Fig. 1-24)

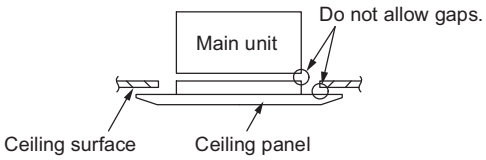

Fig. 1-24

- If there is a gap between the panel and the ceiling, leave the ceiling panel attached and make fine adjustments to the installation height of the unit to eliminate the gap with the ceiling. (Fig. 1-25)

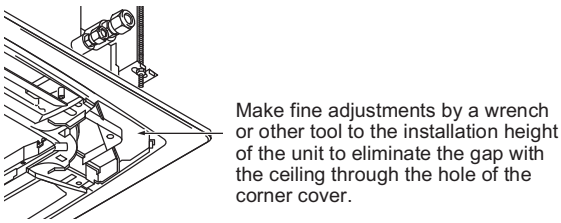

Fig. 1-25

CAUTION

- If the screws are not sufficiently tightened, trouble such as that shown in the figure below may occur. Be sure to tighten the screws securely.

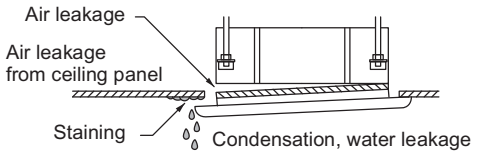

- If a gap remains between the ceiling surface and the ceiling panel even after the screws are tightened, adjust the height of the unit again.

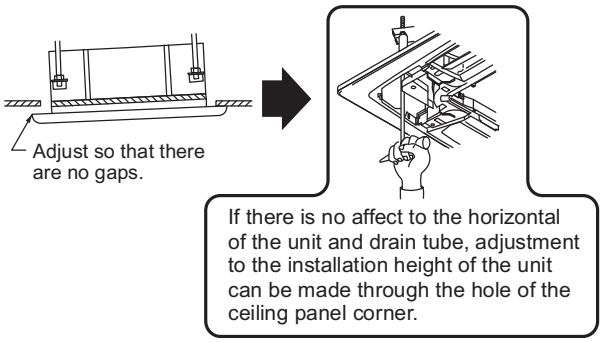

(4) Wiring the Ceiling Panel

1) Open the cover of the electrical component box for control PCB.
2) Connect the 22P connector (white) from the ceiling panel to the connector on the control PCB in the unit electrical component box. In this case, expose the cutout section of the tube for the wiring protection to the outside from the electrical component box and fix it with the clamper attached to the electrical component box.

- If the connectors are not connected, the Auto Flap will not operate. Be sure to connect them securely. (If not connected completely, □09□will be displayed on the remote controller.)
- Check that the wiring connector is not caught between the electrical component box and the cover.
- Check that the wiring connector is not caught between the unit and the ceiling panel.

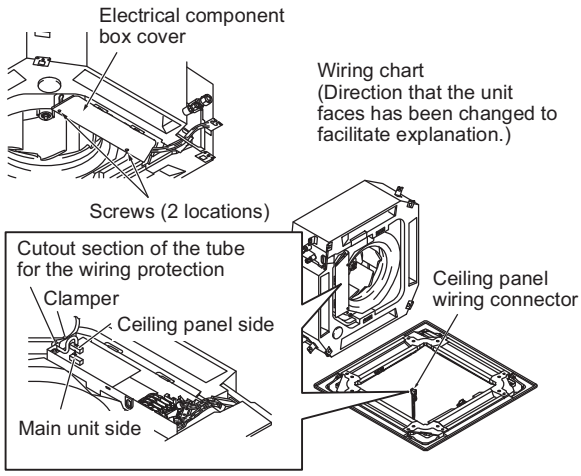

Fig. 1-25

(5) How to Attach the Corner & Air-Intake Grille

A. Attaching the corner cover

1) Check that the safety cord from the corner cover is fastened to the ceiling panel pin, as shown in the figure below.
2) Use the supplied screws to attach the corner cover to the ceiling panel.

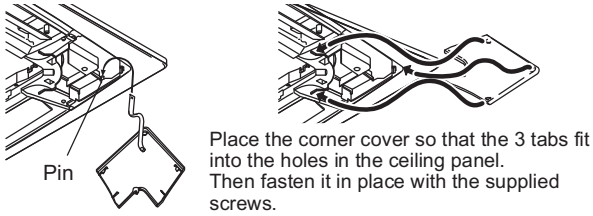

B. Attaching the air-intake grille

- To install the air-intake grille, follow the steps for □Removing the grille□in the reverse order. By rotating the air-intake grille, it is possible to attach the grille onto the ceiling panel from any of 4 directions. Coordinate the directions of the air-intake grilles when installing multiple units, and change the directions according to customer□s requests.
- When attaching the air-intake grille, be careful that the flap lead wire does not become caught.
- Be sure to attach the safety cord that prevents the air-intake grille from dropping off to the ceiling panel unit as shown in the figure below.
- With this ceiling panel, the directions of the air-intake grille lattices when installing multiple units, and the position of the label showing the company name on the corner panel, can be changed according to customer□s requests, as shown in the figure below. However, the wireless signal receiver can only be installed at the refrigerant-tubing corner of the ceiling unit.

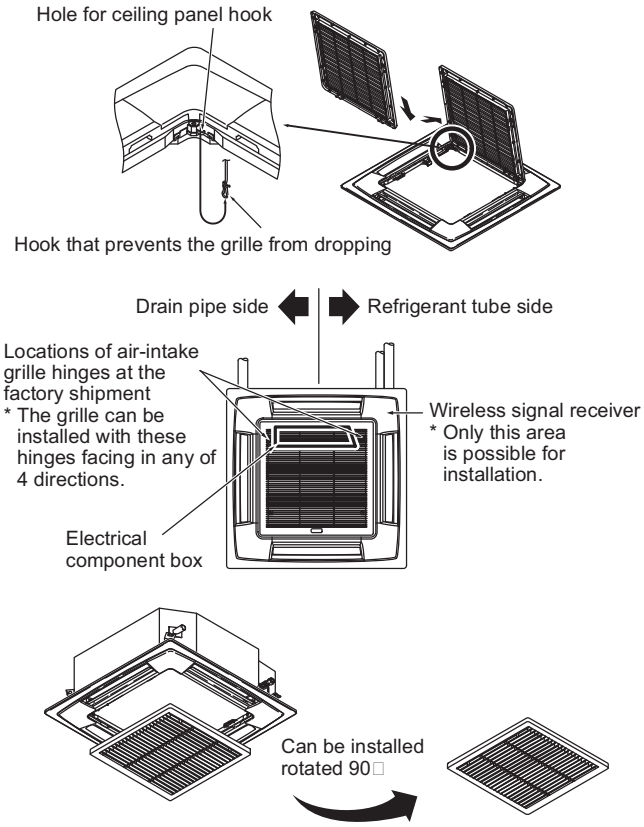

Fig. 1-26

■ Others

(1) Checking After Installation

1) Check that there are no gaps between the unit and the ceiling panel, or between the ceiling panel and the ceiling surface.

* Gaps may cause water leakage and condensation.

2) Check that the wiring is securely connected.

* If it is not securely connected, the auto flap will not operate.
(□P09□is displayed on the remote controller.)
In addition, the water leakage and condensation may occur.

(2) Operating the Wireless Remote Controller

For details of installation, refer to the section □Wireless Signal Receiver□in the supplied installation instructions.

(3) Selecting DC Fan Motor Tap (4-Way cassette)

Check the optional parts accordingly in the following table.

Table for DC Fan Motor Tap Setting

Setting No.	Remote controller setting data Item code 5d	Contents & optional parts name
(3)	0003	Air-blocking material (for 3-way air discharge)
	0003	Air-blocking material (when a discharge duct is connected)
(6)	0006	Air-blocking material (for 2-way air discharge)

*1 When using optional parts in different setting No. in combination with multiple units, conform it to the larger setting No.

1) When setting from the P.C. Board

□Procedure□

Stop the system before performing these steps.

1 Open the electrical component box cover, then check the indoor unit control PCB.

2 Connect the jumper connector (2P: yellow) which was supplied with the accessory to the correct connector pin on the indoor unit control PCB according to the setting number which was confirmed in Table for DC Fan Motor Tap Settings.

Setting No. (3) :

Then connect the jumper connector to the connector pin TP3 (2P: yellow) on the indoor unit control PCB.

Setting No. (6) :

Then connect the jumper connector to the connector pin TP6 (2P: white) on the indoor unit control PCB.

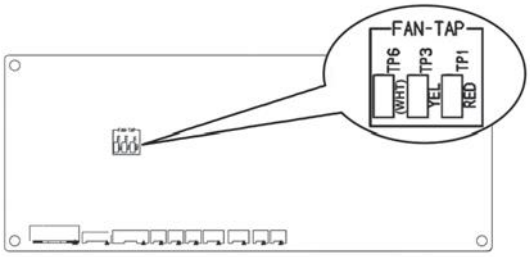

2) When setting with the Wired Remote Controller

□Procedure□

Stop the system before performing these steps.

① Press and hold the [🔧], [SET] and [CANCEL] buttons simultaneously for 4 seconds or longer.

② If group control is in effect, press the [UNIT] button and select the address (unit No.) of the indoor unit to set. At this time, the fan at the indoor unit begins operating.

③ Designate the item code 5d by adjusting the Temperature Setting [▲] / [▼] buttons.

④ Press the timer time [▲] / [▼] buttons to select the desired setting data.

* For item codes and setting data, refer to □Table for DC Fan Motor Tap Setting□.

⑤ Press the [SET] button.
(The display stops blinking and remains lit, and setting is completed.)

* If air-blocking material is used, use the same procedure as in steps③ □⑤above and change the setting for item code □62□to □0000.□

If you wish to change the selected indoor unit, follow the step②.

⑥ Press the [🔧] button to return to normal remote controller display.

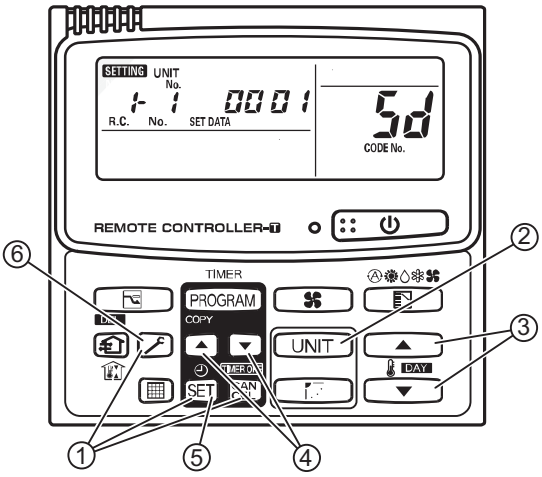

(4) Setting the Flap Separately (When setting the CZ-RTC2)

1) The 4-air outlet flap can be adjusted separately during operation. When not adjusted separately, all flaps operate in the same manner.

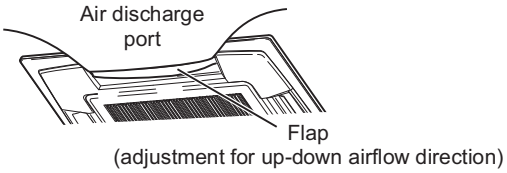

□Procedure□

Stop the system before performing these steps.

① Press and hold the [🔧], [SET] and [CANCEL] buttons simultaneously for 4 seconds or longer.

② If group control is in effect, press the [UNIT] button and select the address (unit No.) of the indoor unit to set. At this time, the fan at the indoor unit begins operating.

③ □SETTING ,□unit No. □1- 1 □(or □ALL □in the case of group control), item code □XX ,□and settings data □YYYY □are displayed blinking on the remote controller LCD display.

④ Designate the item code □XX □by adjusting the Temperature Setting [▲] / [▼] buttons.

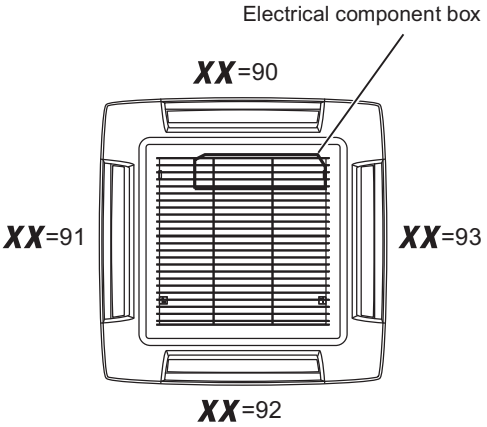

⑤ Press the timer time [▲] / [▼] buttons to select the desired setting data.

Flap position

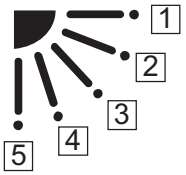

Fig. 1-27

* Setting data □YYYY □(refer to Fig. 1-27)

Setting data	Flap position during operation
0000	Without separate setting
0001	Swing
0002	Move to position 1 and stay
0003	Move to position 2 and stay
0004	Move to position 3 and stay
0005	Move to position 4 and stay
0006	Move to position 5 and stay

When the flap position is set to 4 or 5 and the unit is in the cooling or dry mode, the flap position is moved to 3 and the operation is started. (refer to Fig. 1-27)

NOTE

The flap swings during the operation under □Setting the Flap Separately□.
At this time, the unselected flaps are moved to the position 1. (refer to Fig. 1-27)

⑥ Press the [SET] button.
(The display stops blinking and remains lit, and setting is completed.)
If you wish to change the selected indoor unit, follow the step ② .

⑦ Press the [🔧] button to return to normal remote controller display.

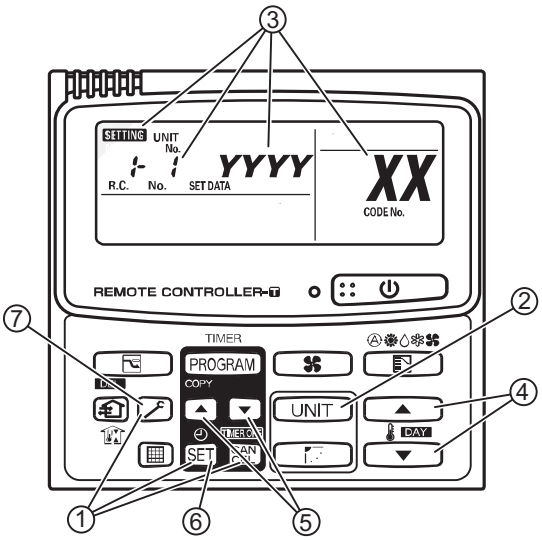

(4-Way Cassette)

Part Name	Figure	Qty	Remarks
Full-scale installation diagram	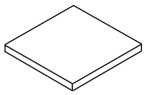	1	Printed on container box
Washer	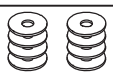	8	For suspension bolts
Screw		4	For full-scale installation diagram
Insulating tape	(White)	2	For gas and liquid tube flare nuts
Flare insulator	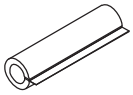	1	For liquid tube
Flare insulator	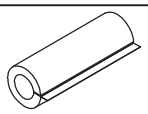	1	For gas tube
Drain hose	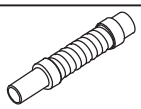	1	
Hose band		1	For securing drain hose
Packing	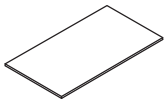	1	
Drain insulator	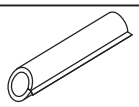	1	
Clamper		3	
Operating Instructions		1	A5-size
Installation Instructions		1	Included this instructions

- Use M10 for suspension bolts.
- Field supply for suspension bolts and nuts.

2. Ceiling Type (T2)

■SELECTING THE INSTALLATION SITE

Indoor Unit

AVOID:

- areas where leakage of flammable gas may be expected.
- places where large amounts of oil mist exist.
- direct sunlight.
- locations near heat sources which may affect the performance of the unit.
- locations where external air may enter the room directly. This may cause •condensation on the air discharge ports, causing them to spray or drip water.
- locations where the remote controller will be splashed with water or affected by dampness or humidity.
- installing the remote controller behind curtains or furniture.
- locations where high-frequency emissions are generated.

DO:

- select an appropriate position from which every corner of the room can be uniformly cooled.
- select a location where the ceiling is strong enough to support the weight of the unit.
- select a location where tubing and drain pipe have the shortest run to the outdoor unit.
- allow room for operation and maintenance as well as unrestricted air flow around the unit.
- install the unit within the maximum elevation difference above or below the outdoor unit and within a total tubing length (L) from the outdoor unit as detailed in the Installation Instructions provided with the outdoor unit.
- allow room for mounting the remote controller about 1 m off the floor, in an area that is not in direct sunlight or in the flow of cool air from the indoor unit.

Ceiling

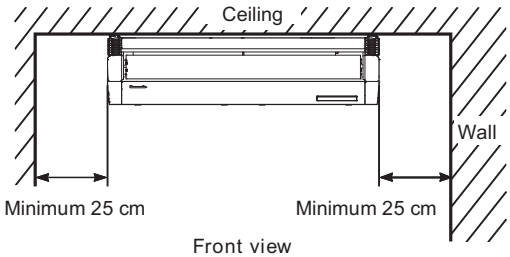

Front view

NOTE

The rear of the indoor unit can be installed flush against the wall.

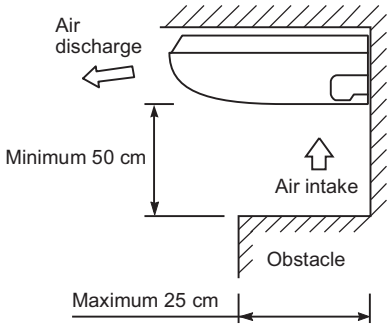

Side view

■ HOW TO INSTALL THE INDOOR UNIT

■ Ceiling Type (T2 Type)

2-1. Required Minimum Space for Installation and Service

(1) Dimensions of suspension bolt pitch and unit

Type \ Length	A	B	C
36, 45, 50	911	960	235
60, 71	1226	1275	235
100, 125, 140	1541	1590	235

Unit: mm

Unit: mm

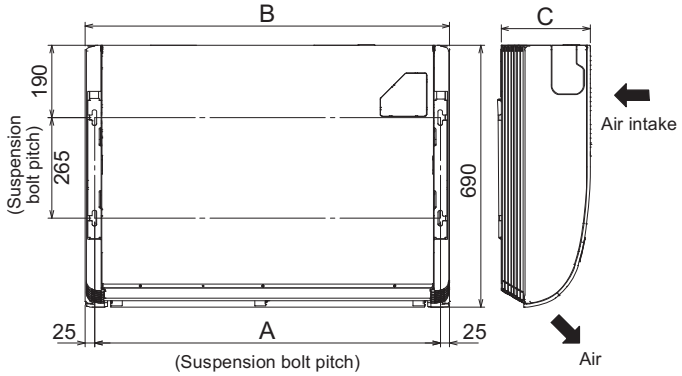

Fig. 1-28

(2) Refrigerant tubing □drain hose position

Unit: mm

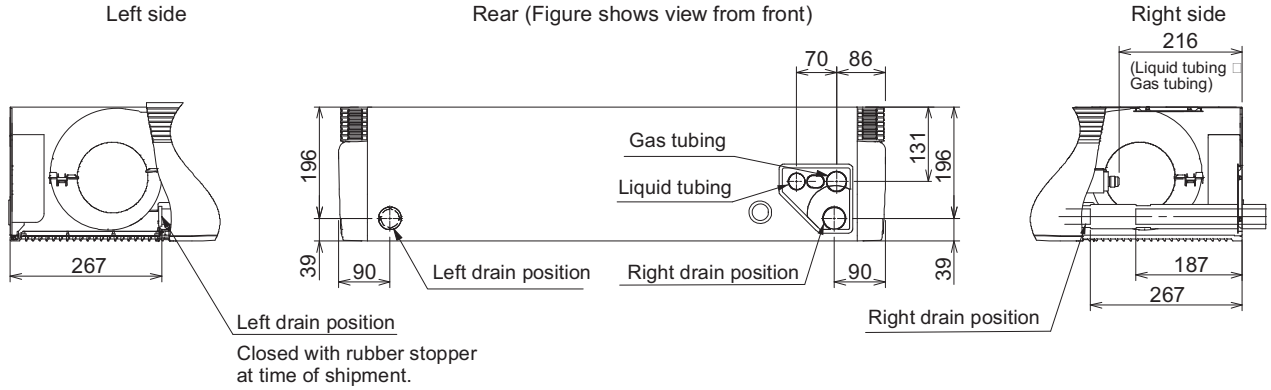

Fig. 1-29

(3) Unit opening position (Refrigerant tubing □drain hose □power inlet port □remote control wiring inlet port)

Unit: mm

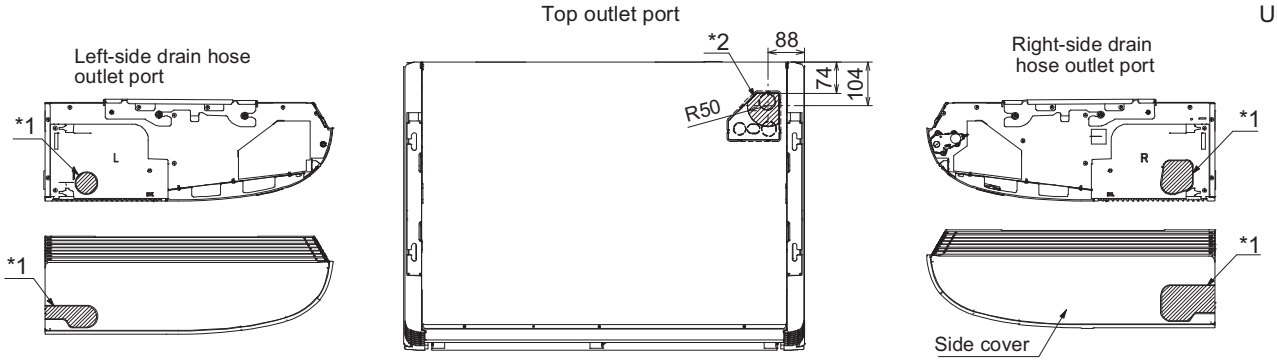

Rear outlet port (Figure shows view from front)

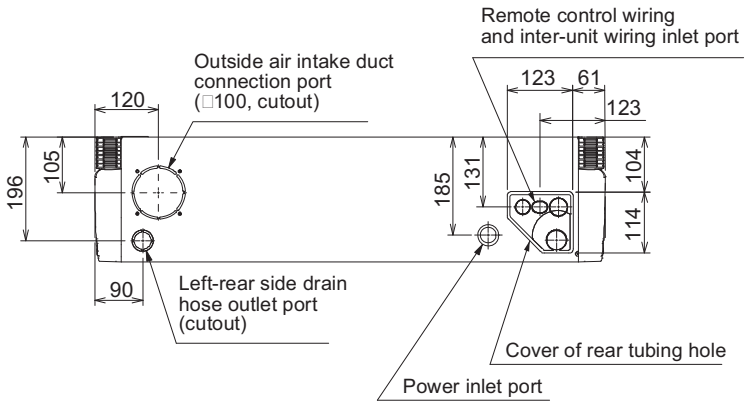

*1 Use a compass saw, jigsaw or similar tool and cut along the indented portion of the side cover and make a hole inside the cover.

*2 When removing the refrigerant tubing from the upper side, cut along the indented portion and pass the tubing through the hole.

NOTE

Be sure to use sealing putty to seal off the opening to prevent dust.

Fig. 1-30

2-2. Preparation Before Installation

(1) Remove the bracket (for suspending the indoor unit).

Loose the M8 suspension bolts.
Then remove the bracket. (Fig. 1-31)

NOTE

Keep the M8 suspension bolts fixed on to the bracket loose.
Loosen the M8 suspension bolts and expose the axis of bolts less than 8 mm.

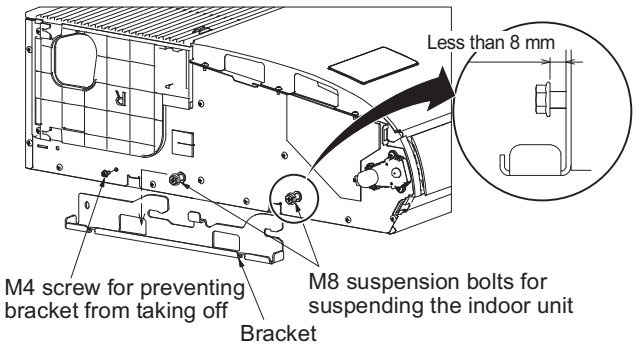

Fig. 1-31

(2) Remove the air-intake grille before suspending the indoor unit. First, remove 2 attachment screws fixed with the latches. Open the air-intake grille and hold the claws of the hinges on both sides. Then remove the air-intake grille and suspension lug located on the left and right side of the indoor unit.

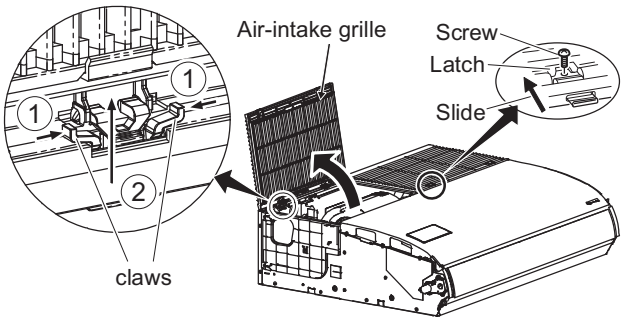

Fig. 1-32

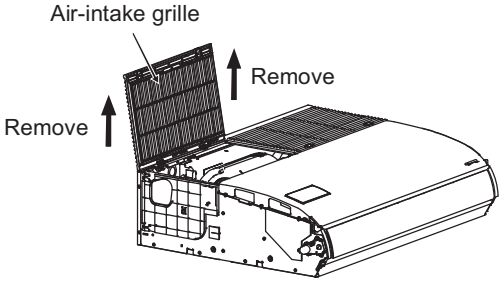

Fig. 1-33

(3) Remove the side plate to the tubing side.

Rear & upper side tubing connection	Remove 2 screws. Slide the side plate in the direction of the arrow and remove it.
Right side tubing connection	Do not remove the side plate.

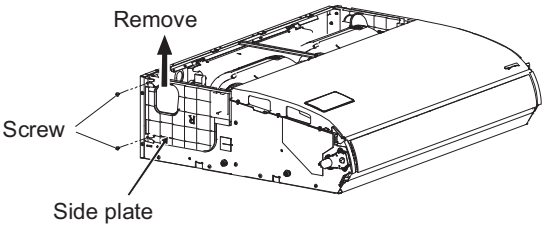

Fig. 1-34

(4) Remove the center bracket.

When wiring, remove the center bracket if necessary.
When wiring is completed, reinstall the center bracket in its original position.

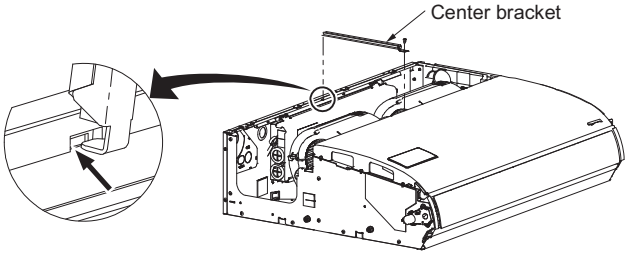

Fig. 1-35

2-3. Suspending the Indoor Unit

NOTE

Since the diagram is made of paper, it may shrink or stretch slightly because of high temperature or humidity. For this reason, before drilling the holes maintain the correct dimensions between the markings.

(1) If the full-scale installation diagram is placed on the ceiling, the locations of each suspension bolt can be chosen.
Take a pencil and mark the drill holes (Fig. 1-36).

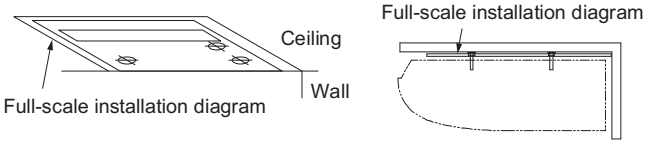

Fig. 1-36

(2) If the full-scale installation diagram is bent at right angle to the ceiling and wall, the locations of the inlet for indoor tubing and wiring are chosen and the locations of each suspension bolt can also be chosen.
Take a pencil and mark the drill holes (Fig. 1-37).

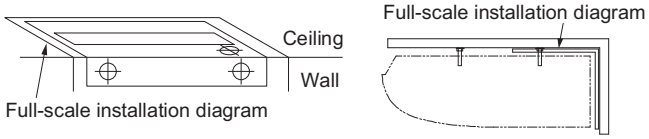

Fig. 1-37

NOTE

The dimension when the indoor unit is placed tightly against the wall.
When installing away from the wall, drainage gradient should be taken into consideration.

(3) Drill holes at the 4 points indicated on the full-scale diagram.

(4) Depending on the ceiling type:

a) Insert suspension bolts (Fig. 1-38).
or

b) Use existing ceiling supports or construct a suitable support (Fig. 1-39).

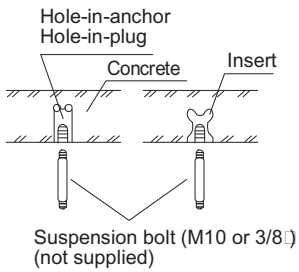

Fig. 1-38

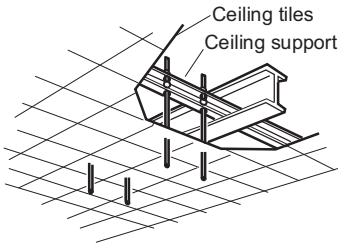

Fig. 1-39

WARNING

It is important that you use extreme care in supporting the indoor unit from the ceiling. Ensure that the ceiling is strong enough to support the weight of the unit. Before suspending the ceiling unit, test the strength of each attached suspension bolt.

(5) Screw in the suspension bolts, allowing them to protrude from the ceiling (Figs. 1-38 and 1-39).
The distance of each exposed bolt must be of equal length within 50 mm. (Fig. 1-40)

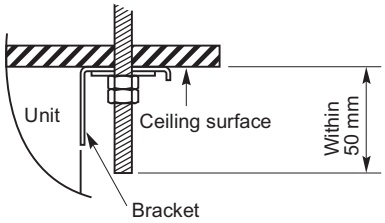

Fig. 1-40

(6) Carry out the preparation for suspending the indoor unit. The suspension method varies depending on whether there is a suspended ceiling or not. (Figs. 1-41 and 1-42)

(7) Suspend the indoor unit as follows:

a) Install the bracket to the suspension bolt.
Stick it onto the ceiling surface. (Fig. 1-41□1-43)

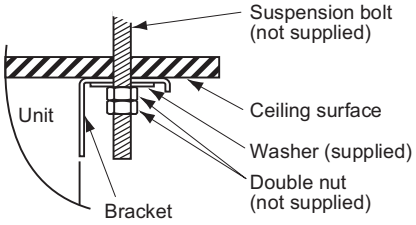

Fig. 1-41

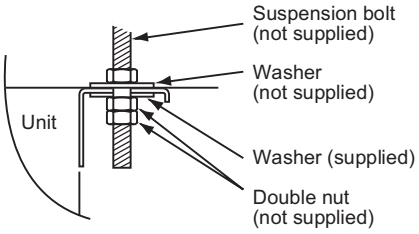

Fig. 1-42

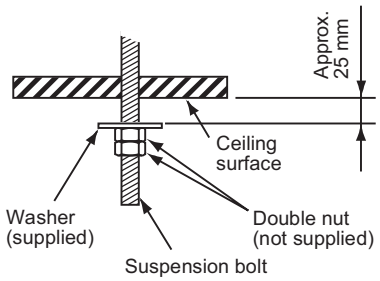

Fig. 1-43

b) Suspend the indoor unit to the bracket.
Tighten the M8 suspension bolts and fix the indoor unit in place. (Fig. 1-44)

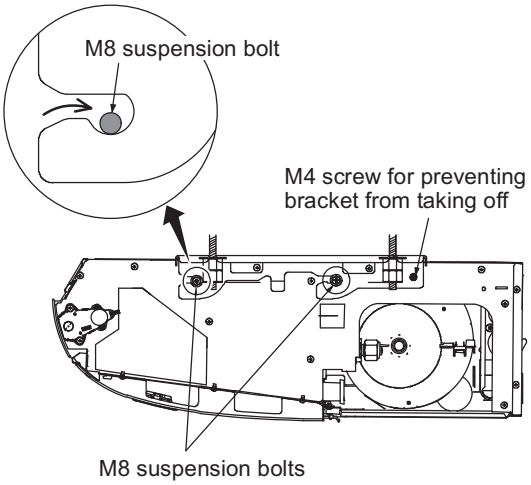

Fig. 1-44

NOTE

The ceiling surface is not always level. Confirm that the indoor unit is evenly suspended. For the installation to be correct, leave a clearance of about 10 mm between the ceiling panel and the ceiling surface and fill the gap with an appropriate insulation or filler material.

(8) If the tubing and wiring are to go towards the rear of the unit, make holes in the wall. (Fig. 1-45)

(9) Measure the thickness of the wall from the inside to the outside and cut PVC pipe at a slight angle to fit. Insert the PVC pipe in the wall. (Fig. 1-46)

NOTE

The hole should be made at a slight downward slant to the outside.

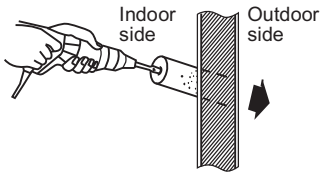

Fig. 1-45

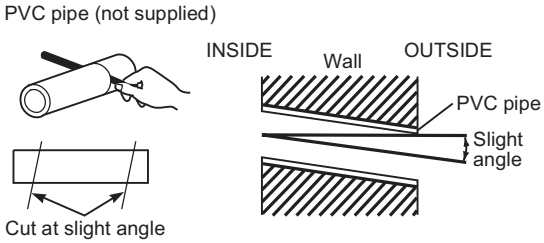

Fig. 1-46

2-4. Duct for Fresh Air

There is a outside air intake duct connection port (cut-out hole) at the left-rear of the indoor unit for drawing in fresh air. If it is necessary to draw in fresh air, remove the cover by opening the hole and connecting the duct to the indoor unit through the connection port.

2-5. Shaping the Tubing

- The positions of the refrigerant tubing connections are shown in the figure below. (The tubing can be routed in 3 directions.) (Fig. 1-47)

* When routing the tubing out through the top or right sides, cut out the appropriate parts in the top panel and cut notches in the side panel.

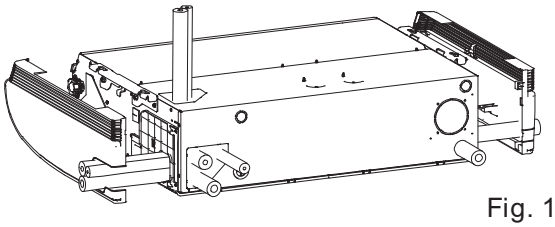

Fig. 1-47

If the tubing is to be routed out together, use a box cutter or similar tool to cut out the part of the rear cover indicated by the marked area (Fig. 1-48), to match the positions of the tubes. Then draw out the tubing.

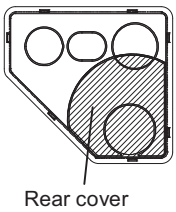

Fig. 1-48

2-6. Installing the Drain Pipe

- Prepare standard PVC pipe for the drain and connect it to the indoor unit drain pipe with the supplied hose band to prevent water leaks.

(1) Drain hose connection

- The drain hose is connected below the refrigerant tubing.

(2) Installing the drain hose

- First insert the drain hose (supplied) to the hose band (supplied) and then install the drain hose to the unit drain port.
- Insert until the drain hose bumps to the end.
- Attach the hose band to make the fixed portion 45°upper slant according to a vinyl tape (not supplied) of the drain hose (supplied).
- Hose band screw torque is 30 - 35N · cm.
- Wind the vinyl tape not to blow up the hose band.
- Connect both the drain hose and PVC pipe (VP20 or similar material, not supplied). Insert until the PVC pipe bumps to the end and adhere with PVC adhesive.

CAUTION

- Wrap the drain insulator (supplied) between the connection of the drain hose and tubing not to expose the copper tubing. Also, wrap the hose band together. Wrap the hose band with the drain insulator, where the screw is located facing upward (Fig. 1-50). Then, tighten the insulator with a vinyl tape not to cause the detachment. If the tubing parts remain exposed, condensation may occur.
- Be sure to use the supplied drain hose.
- If other commercially available hose bands are used, the drain hose may become pinched or wrinkled and there is danger of water leakage.
  Therefore be sure to use the supplied hose bands.

- Connect the drain pipe so that it slopes downward from the unit to the outside. (Fig. 1-49)

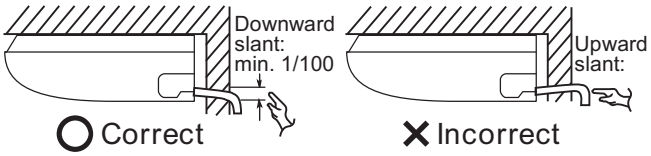

Fig. 1-49

- Never allow water traps to occur in the course of the piping.
- Insulate any piping inside the room to prevent dripping.
- After the drain piping, pour an appropriate amount of water into the drain pan through the opening on the side of the air discharge port. Check the water draining smoothly.

* If the drain hose is routed through the left side, refer to Fig. 1-47, and follow the procedure above to install the hose. Reattach the rubber stopper removed earlier onto the right side.

The rubber stopper can be inserted easily by using a screwdriver or similar tool to press the stopper into the drain port on the main unit. Press the stopper into the main unit drain port as far as it will go.

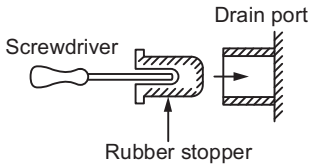

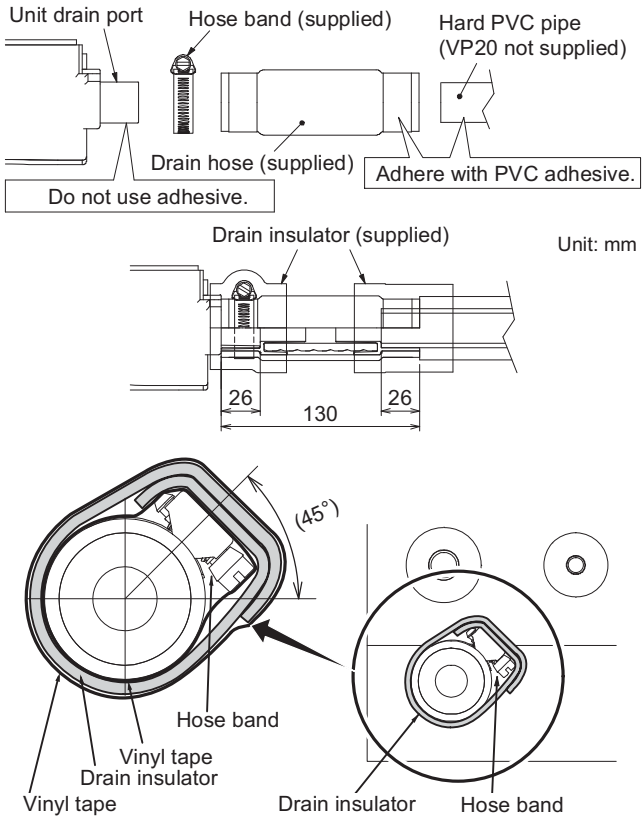

Fig. 1-50

CAUTION

The indoor unit should be slightly tilted downward toward the drain pipe connection side as shown in figure below so that the wastewater can flow smoothly without being trapped in the middle. (Fig. 1-51)

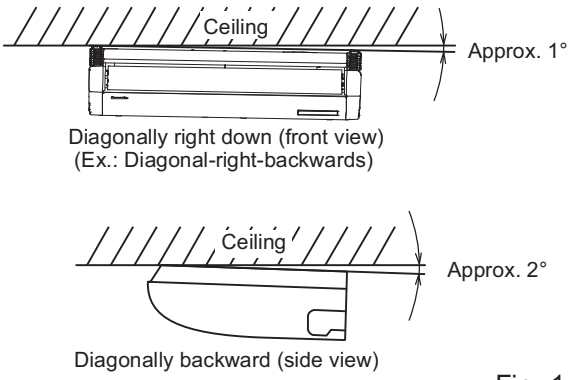

Fig. 1-51

2-7. Final Procedure

Reinstall the removed part to be placed in its original position. (See the section •2-2. Preparation Before Installation□)
Then install the accessory supplied side covers (L/R) on both sides of the indoor unit.

- Attach the supplied side plates.
  Slide the covers from the front side and attach to the claws of the latches.
  Tighten the screws (supplied).

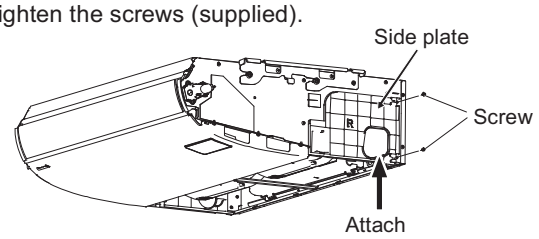

- Attach the accessory supplied side covers.
  Insert the side plates in the direction of the arrow and fix them with 2 screws once you•ve removed.

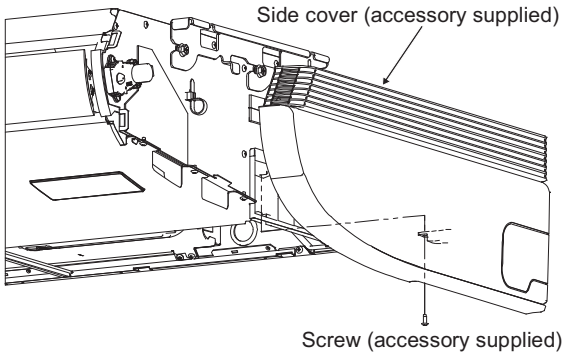

Fig. 1-52

- Attach the air-intake grille.
  When attaching the air-intake grille, perform the reverse procedure to removing the grille.
  Refer to the section •2-2. Preparation Before Installation□
  Be sure to attach the safety string.
  Close the air-intake grille and fix the claws of the latches with the screws.

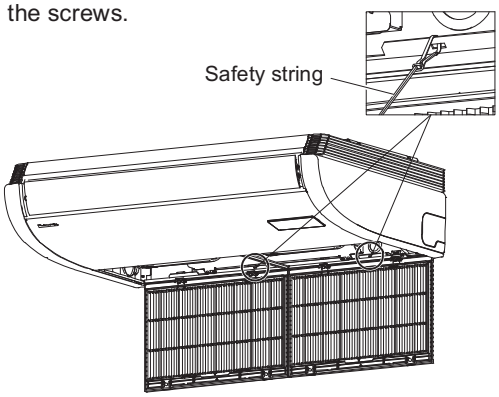

Fig. 1-53

(Ceiling)

Part Name	Figure	Q□ty	Remarks
Special washer		4	For temporarily suspending indoor unit from ceiling
Drain insulator		2	For drain hose joint
Flare insulator		1	For gas tube joint
		1	For liquid tube joints
Clamper		6	For flare insulator and wiring
Full-scale installation diagram		1	For positioning installation
Drain hose		1	For main unit + PVC pipe joints
Hose band		1	For drain hose connection
Side cover (R)		1	(Packed in carton box) For right side
Side cover (L)		1	(Packed in carton box) For left side
Screw		2	For side cover (L/R)
Operating Instructions		1	
Installation Instructions		1	

3. Wall Mounted Type (K1)

■ SELECTING THE INSTALLATION SITE

Indoor Unit

AVOID:

- areas where leakage of flammable gas may be expected.
- places where large amounts of oil mist exist.
- direct sunlight.
- locations near heat sources which may affect the performance of the unit.
- locations where external air may enter the room directly. This may cause condensation on the air discharge ports, causing them to spray or drip water.
- locations where the remote controller will be splashed with water or affected by dampness or humidity.
- installing the remote controller behind curtains or furniture.
- locations where high-frequency emissions are generated.

DO:

- select an appropriate position from which every corner of the room can be uniformly cooled.
- select a location where the ceiling is strong enough to support the weight of the unit.
- select a location where tubing and drain pipe have the shortest run to the outdoor unit.
- allow room for operation and maintenance as well as unrestricted air flow around the unit.
- install the unit within the maximum elevation difference above or below the outdoor unit and within a total tubing length (L) from the outdoor unit as detailed in the Installation Instructions provided with the outdoor unit.
- allow room for mounting the remote controller about 1 m off the floor, in an area that is not in direct sunlight or in the flow of cool air from the indoor unit.

Wall Mounted

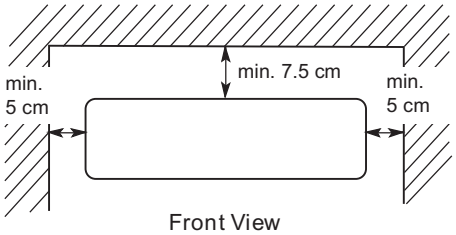

Front View

■ HOW TO INSTALL THE INDOOR UNIT

■ Wall Mounted Type (K1 Type)

Remove the Rear Panel from the Unit

(1) Remove and discard the set screw on the rear panel. (Fig. 1-54)

(2) Press the 2 △ marks on the frame cover and disengage the stationary tabs from the frame. (Fig. 1-55)

(3) Remove the rear panel by grasping the sections shown in Fig. 1-56 and pulling it in the direction shown by the arrow.

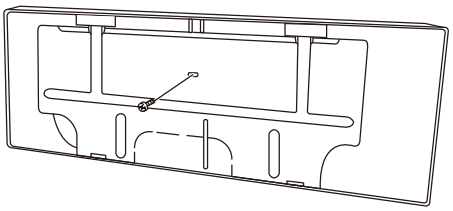

Fig. 1-54

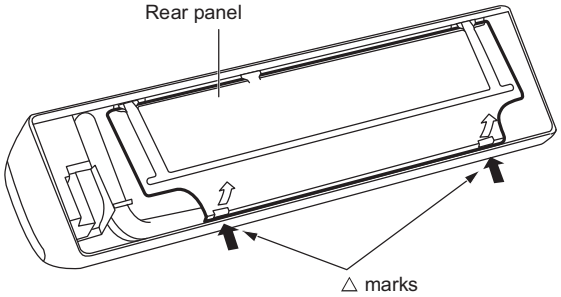

Fig. 1-55

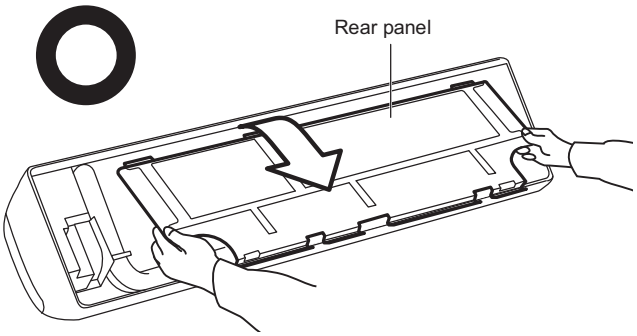

Fig. 1-56

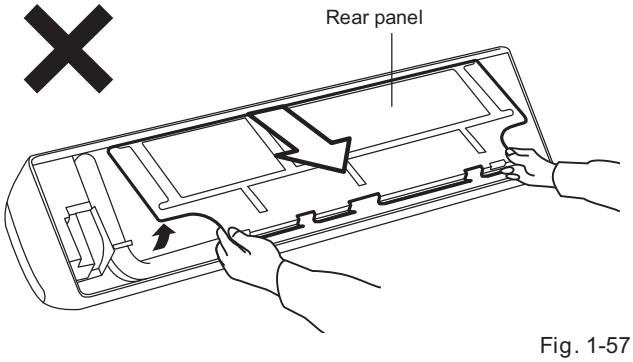

Fig. 1-57

NOTE

Tubing can be extended in 6 directions as shown in Fig. 1-58. Select the direction you need providing the shortest run to the outside unit.

- When left tubing is to be done, switch the drain hose and drain cap. (For details, refer to □Switching drain hose and drain cap□)

Make a Hole

(1) Place the rear panel from the indoor unit on the wall at the location selected. Make sure the panel is horizontal, using a carpenter□s level or tape measure to measure down from the ceiling. Wait until after cutting the hole before attaching the rear panel to the wall.

(2) Determine which side of the unit you should make the hole for tubing and wiring. (Fig. 1-59)

NOTE

In the case of left-rear tubing, use the measurement points 158 mm from the marked position on the rear panel for precise placement of the hose outlet. (Fig. 1-59)

(3) Before making the hole, check carefully that no studs or pipes are directly run behind the spot to be cut.

CAUTION Also avoid areas where electrical wiring or conduits are located.

The above precautions are also applicable if tubing goes through the wall in any other location.

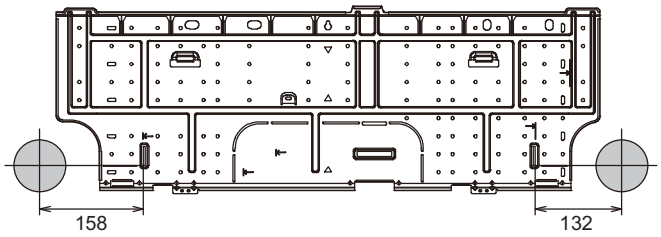

Unit: mm

Fig. 1-59

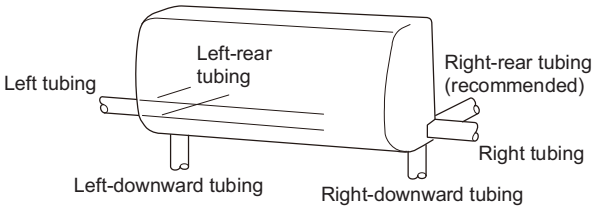

Fig. 1-58

(4) Using a sabre saw, keyhole saw or hole-cutting drill attachment, cut a hole in the wall. See Table 1-6 and Fig. 1-60.

Table 1-6

Hole Dia.
80 mm

(5) Measure the thickness of the wall from the inside edge to the outside edge and cut PVC pipe at a slight angle 6 mm shorter than the thickness of the wall. (Fig. 1-61)

(6) Place the plastic cover over the end of the pipe (for indoor side only) and insert the pipe in the wall. (Fig. 1-62)

Install the Rear Panel on the Wall

Be sure to confirm that the wall is strong enough to suspend the unit.

There are a number of screw holes on the rear panel.

Using the 8 screw holes with ⇦ mark is recommended to attach the rear panel securely to the wall.

NOTE

Be sure to install the unit within the range of the wall.

If Wooden Wall

(1) Attach the rear panel to the wall with the 8 screws provided. (Fig. 1-63)

If you are not able to line up the holes in the rear panel with the beam locations marked on the wall, use rawl plugs or toggle bolts to go through the holes on the panel or drill 5 mm dia. holes in the panel over the stud locations and then mount the rear panel.

(2) Double check with a carpenter's level or tape measure that the panel is level. This is important to install the unit properly. (Fig. 1-64)

(3) Make sure the panel is flush against the wall. Any space between the wall and unit will cause noise and vibration.

NOTE

Hole should be made at a slight downward slant to the outdoor side.

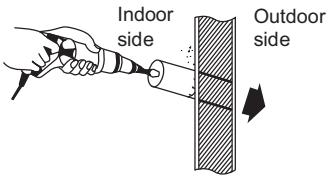

Fig. 1-60

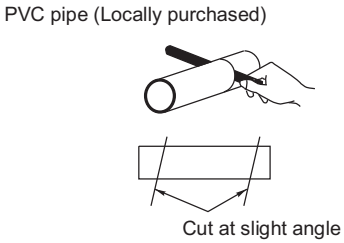

Fig. 1-61

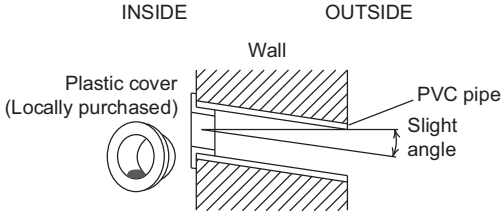

Fig. 1-62

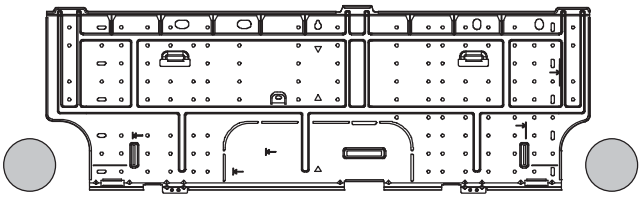

Fig. 1-63

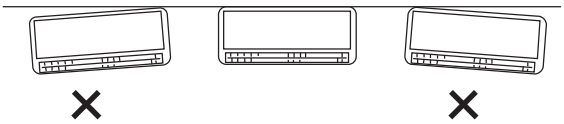

Fig. 1-64

Removing and Installing the Grille

Basically, these models can be installed and wired without removing the grille. If access to any internal part is needed, follow the steps as given below.

How to remove the grille

(1) Open the front panel until it is nearly horizontal, grasp the sections near the front panel arms on both sides, and then remove the panel by pushing the arms towards the outside while pulling the panel towards you.
If the front panel is difficult to remove, grasp both ends of it and lift it up slightly. Move it to the left and disengage the left arm, then move it to the right and disengage the right arm. (Fig. 1-65)

(2) Lift the anti-mold filter up slightly to disengage it from the protrusions on the unit, and then pull downward to remove the filter from the unit. (Fig. 1-65)

(3) Remove the 3 screws from the front of the unit and remove the screw covers on the bottom surface. Then remove the 2 screws. (Fig. 1-66)

(4) Remove the screw on the right side cover plate and remove the cover. (Fig. 1-66)

(5) Remove the lower flap by disengaging 4 pins of the lower flap in order. (Figs. 1-67 and 1-68)
(The flap is so flexible that it can be easily removed.)

(6) Lift up the grille in the direction shown by the arrow and pull the grille towards you to remove it. (Fig. 1-69)

How to replace the grille

(1) While aligning the top edge of the grille with the frame, move the grille horizontally and insert the top and bottom into the frame.

(2) Press the grille firmly with your hand to ensure no gap exists between the frame and grille.

(3) Tighten the 6 screws. And fix the removed covers in place.

(4) Grasp the sections near the front panel arms on both sides, and hold the front panel so that it is nearly horizontal. Push the arm shafts towards the outside so that they come into contact with the top of the indentations on the right and left sides of the air conditioner. Then push firmly until the arm shafts click into place. (Fig. 1-70)

(5) Remount the lower flap.
(In remounting the flap, it cannot be turned end for end because the right and left pins of the flap differ in form. (Fig. 1-68))

(6) Insert the top of the anti-mold filter, and then secure the bottom of the filter with the protrusions on the unit.

(7) When closing the front panel, push the central part of the front panel first and then press the bottom right and left corners in place until you feel a click. (Fig. 1-71)

NOTE

Check that no gap exists between the frame and the grille.

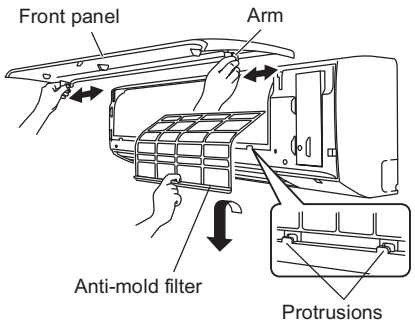

Fig. 1-65

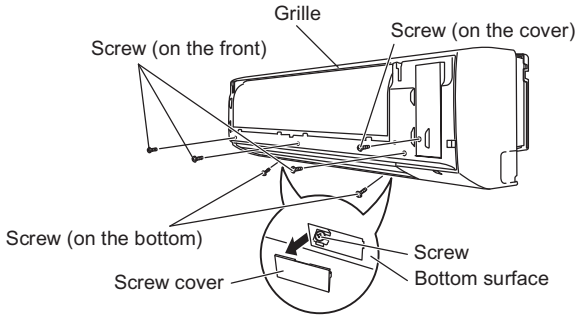

Fig. 1-66

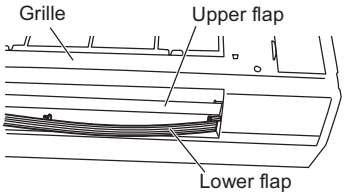

Fig. 1-67

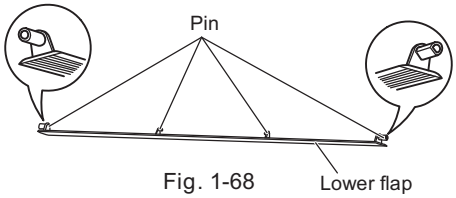

Fig. 1-68

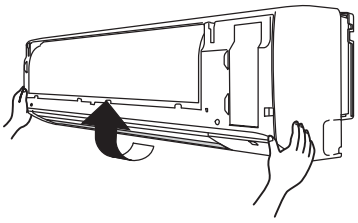

Fig. 1-69

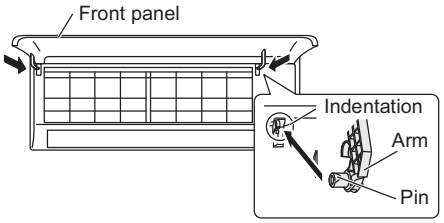

Fig. 1-70

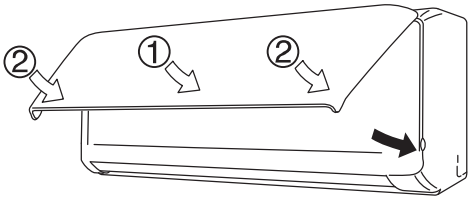

Fig. 1-71

Shape the Indoor Side Tubing

(1) Arrangement of tubing by direction

a) Right or left tubing

Cut out the corner of the right/left frame with a hacksaw or the like. (Figs. 1-72 and 1-73)

b) Right-rear or left-rear tubing

In this case, the corner of the frame need not be cut.

(2) To mount the indoor unit on the rear panel:

Hang the 3 mounting slots of the unit on the upper tabs of the rear panel. (Fig. 1-74)

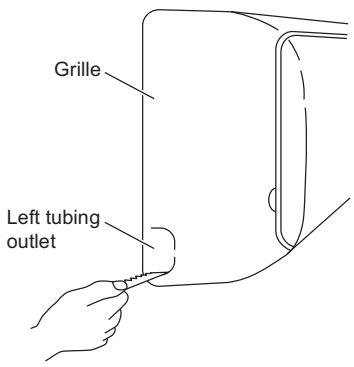

Fig. 1-72

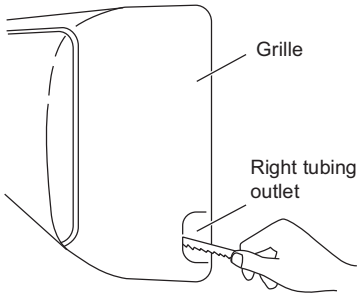

Fig. 1-73

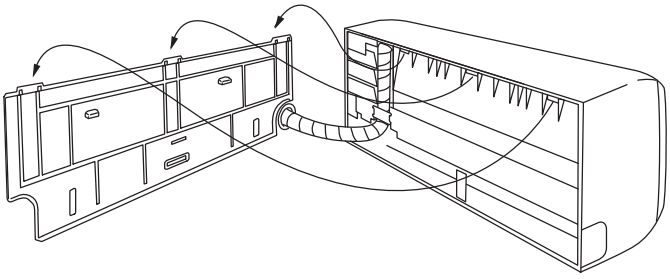

Fig. 1-74

Wiring Instructions

General precautions on wiring

(1) Before wiring, confirm the rated voltage of the unit as shown on its nameplate, then carry out the wiring closely following the wiring diagram.

(2) Provide a power outlet to be used exclusively for each unit, with a power supply disconnect and circuit breaker for overcurrent protection provided in the exclusive line.

(3) To prevent possible hazards due to insulation failure, the unit must be grounded.

(4) Each wiring connection must be done tightly and in accordance with the wiring system diagram. Wrong wiring may cause the unit to misoperate or become damaged.

(5) Do not allow wiring to touch the refrigerant tubing, compressor, or any moving parts of the fan.

(6) Unauthorized changes in the internal wiring can be very dangerous. The manufacturer will accept no responsibility for any damage or misoperation that occurs as a result of such unauthorized changes.

Mounting

(1) To install the indoor unit, mount the indoor unit onto the 3 tabs on the upper part of the rear plate.

(2) Hold down the air discharge outlet and press the lower part of the indoor unit until it clicks to securely fasten to the 2 tabs on the lower part of the rear plate. (Fig. 1-75)

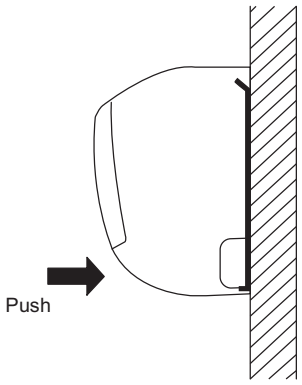

Fig. 1-75

NOTE

For tubing, choose either the right or left tubing direction and follow the steps below. Also, extend the support on the back of the indoor unit as a stand to make your work easier. (Fig. 1-76)

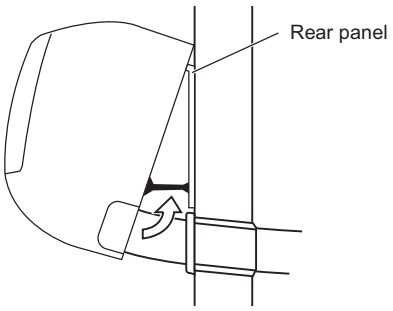

Fig. 1-76

■ Right-side tubing

(1) Shape the refrigerant tubing so that it can easily go into the wall hole. (Fig. 1-77)

(2) Push the wiring, refrigerant tubing, and drain hose through the hole in the wall. Adjust the indoor unit so it is securely seated on the rear panel. (Fig. 1-78)

(3) Carefully bend the tubing (if necessary) to run along the wall in the direction of the outdoor unit and then tape as far as the fittings. The drain hose should come straight down the wall to a point where water runoff wont stain the wall.

(4) Connect the refrigerant tubing to the outdoor unit. (After performing a leak test on the connecting part, insulate it with the tubing insulation. (Fig. 1-79)).

(5) Assemble the refrigerant tubing, drain hose, and conduit (including inter-unit wiring) as shown in Fig. 1-80.

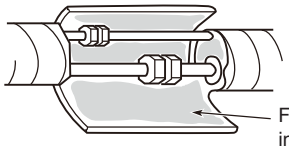

Fig. 1-79

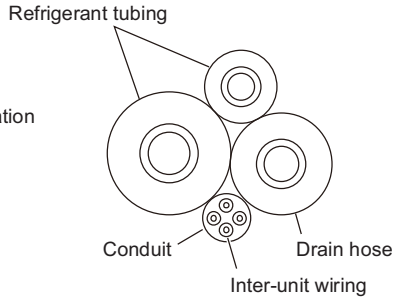

Fig. 1-80

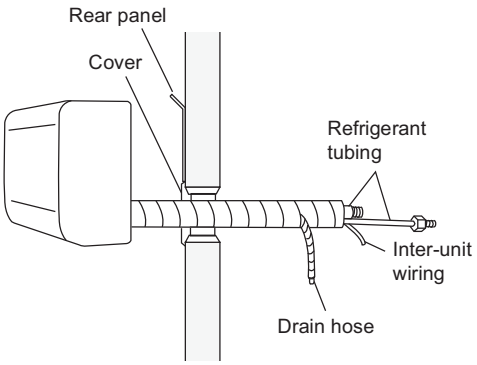

Fig. 1-77

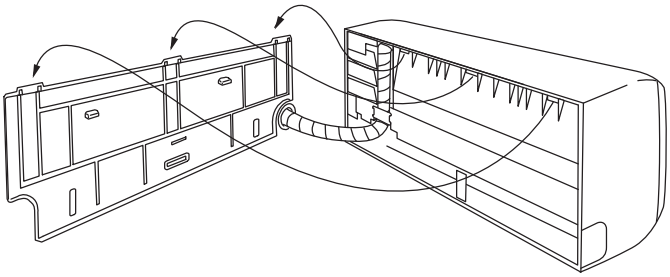

Fig. 1-78

■ Left-side tubing

(1) Lead the tubing and drain hose through the wall, allowing sufficient length for connection. Then bend the tubing using a tube bender to make the attachment. (Fig. 1-81)

(2) Switch the drain hose and drain cap.

Switching drain hose and drain cap

(a) Locate the drain hose and the drain cap. (Fig. 1-82)

(b) Remove the screw fastening the drain hose on the right side, and pull out the drain hose to remove it. (Fig. 1-82)

(c) Apply moderate force to pull off the drain cap on the left side. (If you cannot pull it off by hand, use a long-nose pliers.)

(d) Reattach the drain hose to the left side and the drain cap to the right side. (Fig. 1-83)

Drain hose

Slide the drain hose fully onto the drain pan outlet. (It will be easy to slide when water is added.) Check that the screw holes in the drain bracket and the drain pan outlet are aligned and securely in contact, then fasten them with the screw. (After attaching the drain hose, check that it is attached securely.) (Fig. 1-84)

Drain cap

Use a Phillips head screwdriver to push the drain cap in firmly. (If it is difficult to push in, wet the cap with water first.)

(3) Install the indoor unit on the rear panel.

(4) Connect the tubing and wiring led inside from outdoors.

(5) After completing a leak test, bundle the tubing together with armoring tape and store it inside the tubing storage area at the back of the indoor unit and hold it with clamps. (Figs. 1-83 and 1-85)

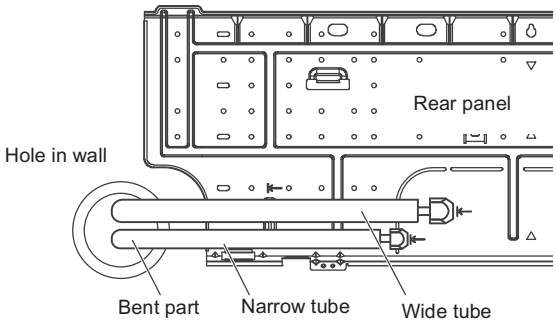

Fig. 1-81

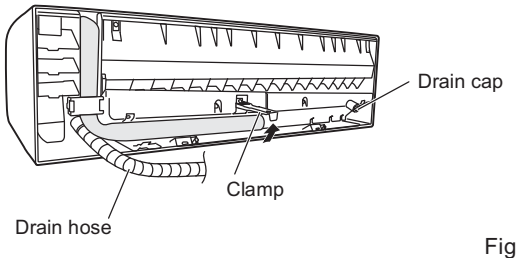

Fig. 1-82

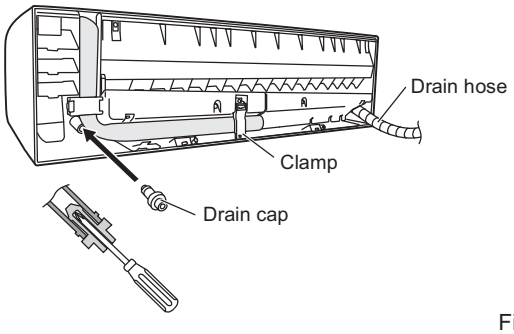

Fig. 1-83

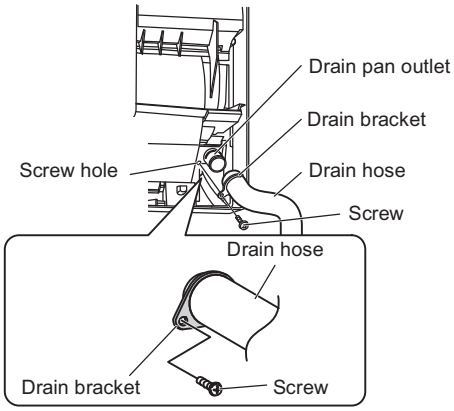

Fig. 1-84

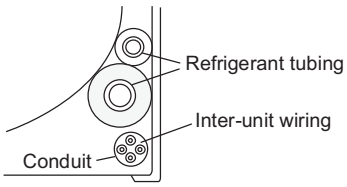

Fig. 1-85

To unmount indoor unit

(1) Remove the screw cover on the bottom surface. (Fig. 1-87)

(2) Fasten the frame to the rear panel using the 2 supplied tapping screws 4 × 10 mm. (Fig. 1-87)

(3) Press the 2 △ marks on the lower part of the indoor unit and unlatch the tabs. Then lift the indoor unit and unmount. (Fig. 1-86)

NOTE

Under normal conditions, the installation design calls for a less than 2 mm gap between the air conditioner unit and the wall. Confirm that the gap is appropriate (less than 2 mm).

Drain Hose

a) The drain hose should be slanted downward to the outdoors. (Fig. 1-88)

b) Never form a trap in the course of the hose.

c) If the drain hose will run in the room, insulate the hose with insulation* so that chilled condensation will not damage furniture or floors. (Fig. 1-89)

*Foamed polyethylene or its equivalent is recommended.

WARNING

Do not supply power to the unit or operate it until all tubing and wiring to the outside unit are completed.

Risk of Electric Shock

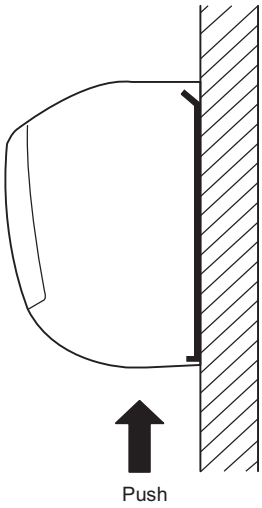

Fig. 1-86

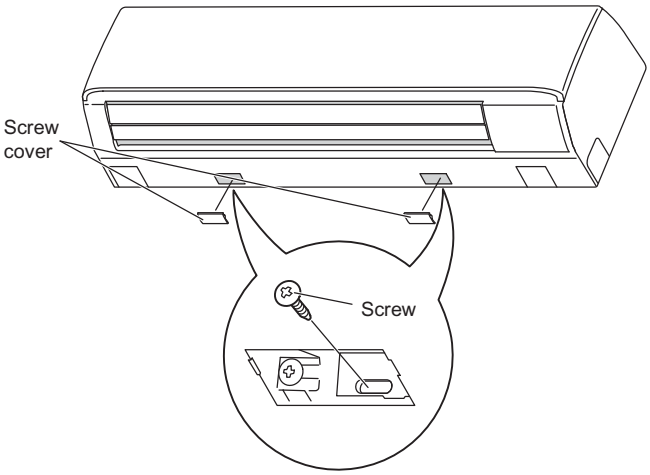

Fig. 1-87

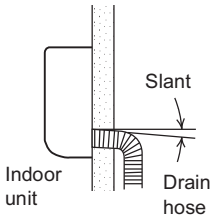

Fig. 1-88

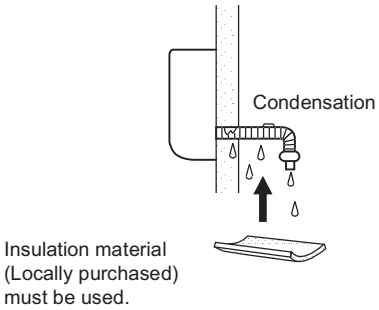

Fig. 1-89

(Wall Mounted)

Part Name	Figure	Qty
Tapping screw	Truss-head Phillips 4 × 20 mm	8
Tapping screw	Truss-head Phillips 4 × 10 mm	2
Flare insulation		1

4. Low Silhouette Ducted Type (F1)

■ SELECTING THE INSTALLATION SITE

Indoor Unit

AVOID:

- areas where leakage of flammable gas may be expected.
- places where large amounts of oil mist exist.
- direct sunlight.
- locations near heat sources which may affect the performance of the unit.
- locations where external air may enter the room directly. This may cause condensation on the air discharge ports, causing them to spray or drip water.
- locations where the remote controller will be splashed with water or affected by dampness or humidity.
- installing the remote controller behind curtains or furniture.
- locations where high-frequency emissions are generated.

DO:

- select an appropriate position from which every corner of the room can be uniformly cooled.
- select a location where the ceiling is strong enough to support the weight of the unit.
- select a location where tubing and drain pipe have the shortest run to the outdoor unit.
- allow room for operation and maintenance as well as unrestricted air flow around the unit.
- install the unit within the maximum elevation difference above or below the outdoor unit and within a total tubing length (L) from the outdoor unit as detailed in the Installation Instructions provided with the outdoor unit.
- allow room for mounting the remote controller about 1m off the floor, in an area that is not in direct sunlight or in the flow of cool air from the indoor unit.

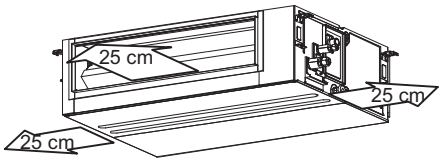

■ HOW TO INSTALL THE INDOOR UNIT

■ Low Silhouette Ducted Type (F1 Type)

4-1. Required Minimum Space for Installation and Service

- This air conditioner is usually installed above the ceiling so that the indoor unit and ducts are not visible. Only the air intake and air outlet ports are visible from the unit bottom.
- The minimum space for installation and service is shown in Fig. 1-90 and Table 1-7.

Table 1-7 Unit: mm

Type	36, 45, 50	60, 71	100, 125, 140
A (Length)	867	1,067	1,467

- It is recommended that space be provided (450 × 450 mm) for checking and servicing the electrical system.
- The detailed dimensions of the indoor unit is shown in Fig. 1-91 and Table 1-8.

Unit: mm

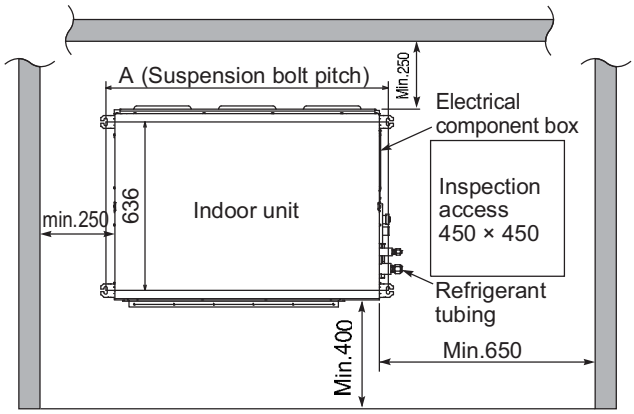

Fig. 1-90

Table 1-8 Unit: mm

Type	A	B	C	D	E	F
36, 45, 50	867	800	450 (Pitch 150 × 3)	71	592	12
60, 71	1,067	1,000	750 (Pitch 150 × 5)	21	792	16
100, 125, 140	1,467	1,400	1,050 (Pitch 150 × 7)	71	1,192	20

a) Refrigerant tubing joint (liquid tube)
b) Refrigerant tubing joint (gas tube)
c) Upper drain port VP25 (O.D. 32 mm) ℓ200 flexible hose supplied
d) Bottom drain port VP25 (O.D. 32 mm)
e) Suspension lug (4 □12 × 30 mm)
f) Power supply outlet
g) Fresh air intake port (□150 mm)
h) Flange for flexible air outlet duct
i) Electrical component box
j) Filter

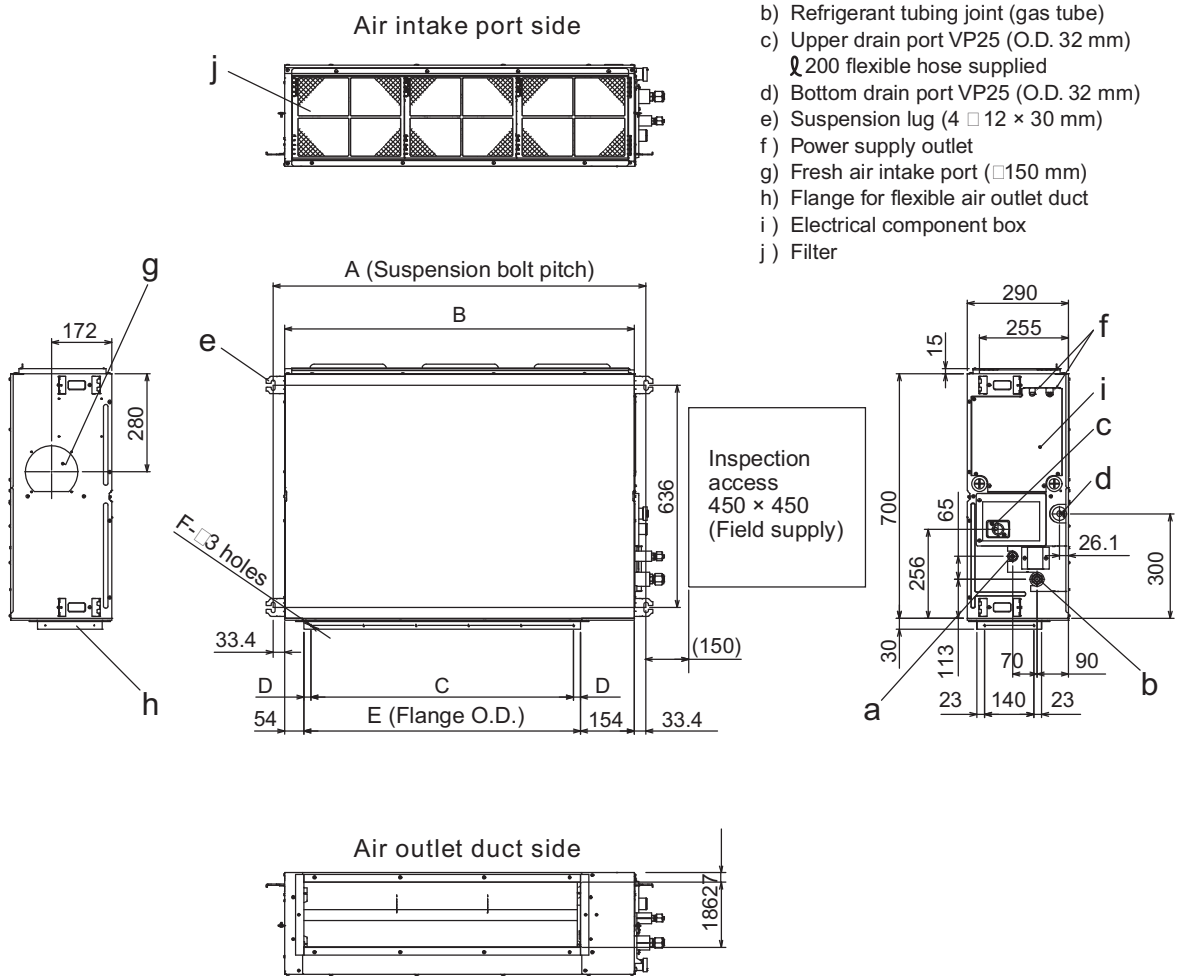

Unit: mm

Fig. 1-91

4-2. Suspending the Indoor Unit

Depending on the ceiling type:

- Insert suspension bolts (Fig. 1-92)
  or
- Use existing ceiling supports or construct a suitable support (Fig. 1-93).

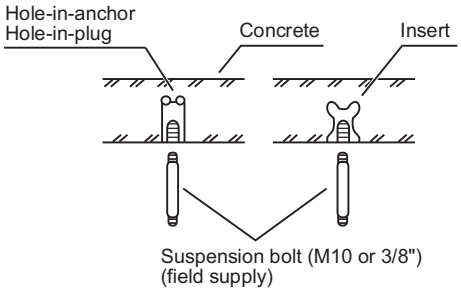

Fig. 1-92

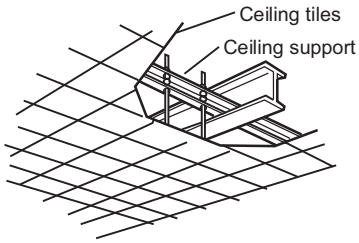

Fig. 1-93

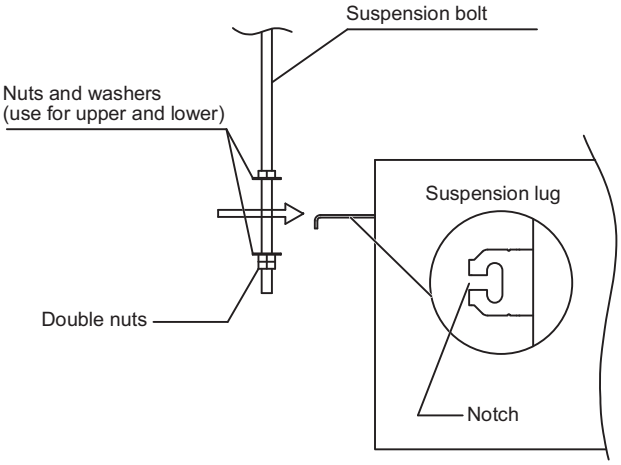

Fig. 1-94

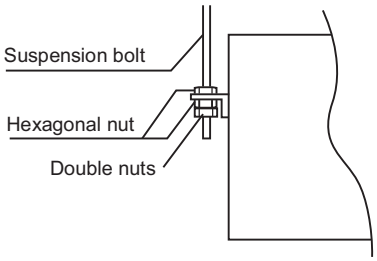

Fig. 1-95

WARNING

It is important that you use extreme care in supporting the indoor unit inside the ceiling. Ensure that the ceiling is strong enough to support the weight of the unit. Before suspending the unit, test the strength of each attached suspension bolt.

(1) When placing the unit inside the ceiling, determine the pitch of the suspension bolts referring to the dimensional data as shown in Fig. 1-90 and Table 1-8.
Tubing must be laid and connected inside the ceiling when suspending the unit. If the ceiling is already constructed, lay the tubing into position for connection to the unit before placing the unit inside the ceiling.

(2) Screw in the suspension bolts allowing them to protrude from the ceiling (Fig. 1-92). (Cut the ceiling material, if necessary.)

(3) Thread the 3 hexagonal nuts and 2 washers (field supply) onto each of the 4 suspension bolts (Figs. 1-94 and 1-95). Use 1 nut and 1 washer for the upper part, and 2 nuts and 1 washer for the lower part, so that the unit will not fall off the suspension lugs.

- This shows an example of installation.

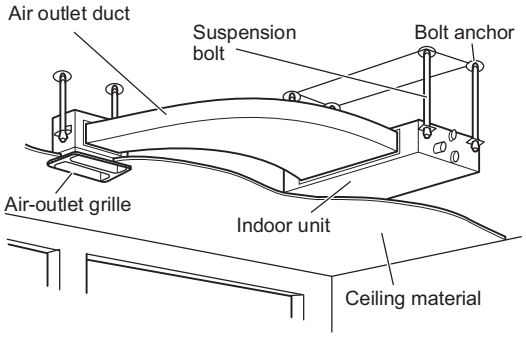

Fig. 1-96

4-3. Installing the Drain Pipe

(1) Prepare standard hard PVC pipe (O.D. 32 mm) for the drain and use the supplied hose band to prevent water leaks.
The PVC pipe must be purchased separately.
The transparent drain part on the unit allows you to check drainage. (Fig. 1-97)

CAUTION

- Do not use adhesive tape at the drain connection port on the indoor unit.
- Insert the drain pipe until it contacts the socket, and then secure it tightly with the hose band.
- Do not use the supplied drain hose bent at a 90□angle. (The maximum permissible bend is 45□)
- Tighten the hose clamps so their locking nuts face upward. (Fig. 1-97)

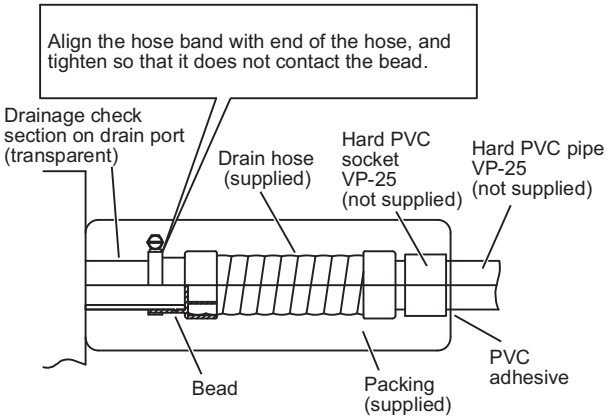

Fig. 1-97

(2) After connecting the drain pipe securely, wrap the supplied packing and drain pipe insulator around the pipe, then secure it with the vinyl clamps . (Fig. 1-98)

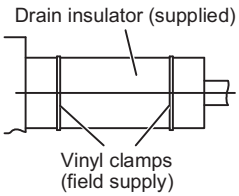

Fig. 1-98

NOTE

Make sure the drain pipe has a downward slant (1/100 or more) and that there are no water traps.

CAUTION

- Do not install an air bleeder as this may cause water to spray from the drain pipe outlet. (Fig. 1-99)

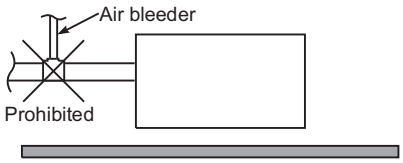

Fig. 1-99

- If it is necessary to increase the height of the drain pipe, the section directly after the connection port can be raised a maximum of 500 mm. Do not raise it any higher than 500 mm, as this could result in water leaks. (Fig. 1-100)

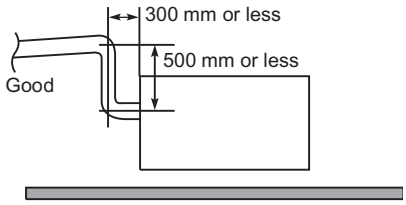

Fig. 1-100

- Do not install the pipe with an upward slant from the connection port. This will cause the drain water to flow backward and leak when the unit is not operating. (Fig. 1-101)

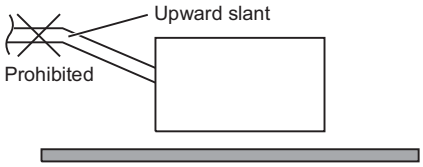

Fig. 1-101

- Do not apply force to the piping on the unit side when connecting the drain pipe. The pipe should not be allowed to hang unsupported from its connection to the unit. Fasten the pipe to a wall, frame, or other support as close to the unit as possible. (Fig. 1-02)

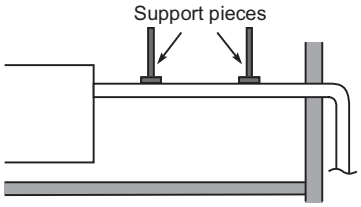

Fig. 1-102

Checking the Drainage

After wiring and drain piping are completed, use the following procedure to check that the water will drain smoothly. For this, prepare a bucket and wiping cloth to catch and wipe up spilled water.

(1) Connect power to the power terminal board (R, S terminals) inside the electrical component box.

(2) Remove the tube cover and slowly pour about 1,200 cc of water through the opening into the drain pan to check drainage.

(3) Short-circuit the check pin (CHK) on the indoor control circuit board and operate the drain pump. Check the water flow through the transparent drain port and see if there is any leakage.

CAUTION

Be careful since the fan will start when you short the pin on the indoor control board.

(4) When the drainage check is complete, open the check pin (CHK) and remount the insulator and drain cap onto the drain inspection port.

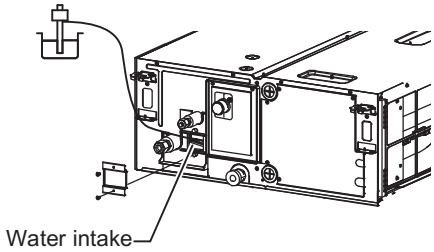

Fig. 1-103

4-4. Connecting Duct to Air Intake Port Side

(1) First pull out a filter in the direction of the electrical component box in the unit. (Fig. 1-104)
The pre-installed filter will not be used any more.

(2) Then remove the seal packing, bracket and filter attached to the side of the air intake port. (Fig. 1-104)

(3) Install the duct (field supply).
See the figure for the dimension of the installation hole.
Use M5 self-tapping screws for installation. (Fig. 1-105)

NOTE

- Select an air-intake grille with a filter at a local shop.
- To get clean air and to extend the service life of the air conditioner, an air filter must be installed in the air intake. For installation and cleaning the air filter, consult your dealer or service center.

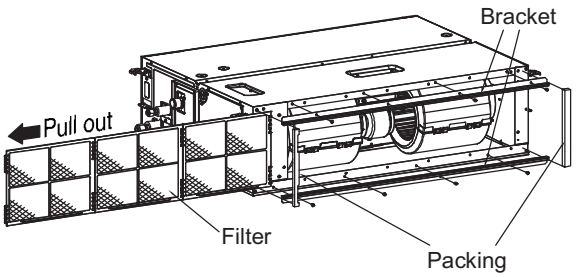

Fig. 1-104

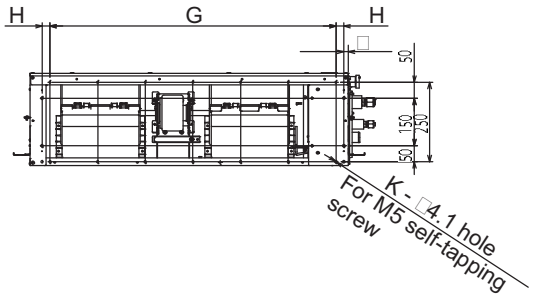

Unit : mm

Type	G	H	□	K
36, 45, 50	600 (Pitch 150 × 4)	25	113	14
60, 71	900 (Pitch 150 × 6)	25	13	18
100, 125, 140	1,350 (Pitch 150 × 9)	0	13	24

Fig. 1-105

4-5. External Static Pressure Setting

Choose one of the following methods from □a□, □b□, □c□or □d□as shown in the flow chart (within the dotted lines) and then make the setting accordingly.

a. No setting modification..... : Use-as-is at shipment (there are cases in which the setting may differ from the shipment setting when reset after once setting the external static pressure.)

b. Manual setting (set with the PC board)..... : For high static pressure. Switching method with the short-circuit connector.

c. Manual setting (set with the wired remote controller) ..... : Low static pressure □ high static pressure

d. Auto airflow volume setting (set on the wired remote controller) .... : Air outlet volume is automatically adjusted to the rated airflow volume with the auto airflow control drive.

Flow of External Static Pressure

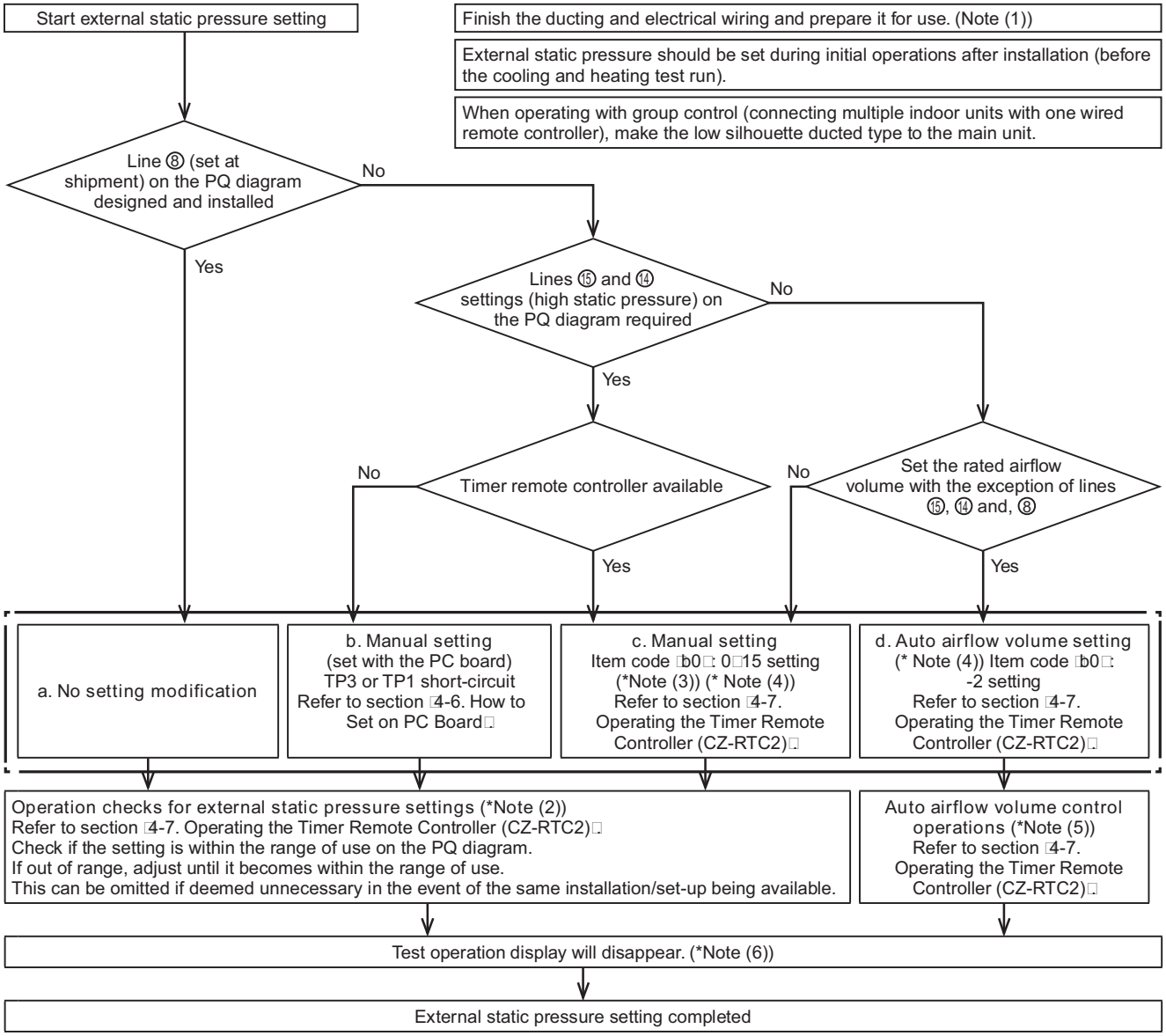

NOTE

(1) Check the following items before performing the setting-check operations or auto airflow volume operations.

1) Check to make sure that the electrical wiring and ducting have been completed. Activate the stand-by mode. In particular, make sure that the closed damper located in the middle of the duct is open, if installed. Also, make sure that air filters have been installed inside the air inlet duct.
Check to make sure air is not leaking from the joints.

2) If multiple air outlets and air inlets are included, adjust the airflow volume ratio of all of them until they meet the design airflow ratio.

3) Make sure the address setting has been completed.

(2) The operation check will be completed in approximately three minutes if the settings have been made correctly. The settings will be modified if they are out of the range of use (maximum 30 minutes.). If this is not completed within 31 minutes, check whether the air speed is set to □H□or not.

(3) Refer to Table 1-10 and Fig. 1-107 for details on the relationship between the value of item code •b0□ and the external static pressure.

(4) When set in group control (connecting multiple indoor units with one wired remote controller), set each indoor unit to item code •b0□. When amending the setting after selecting [b. Manual setting] (due to airflow path changes, etc.), it is necessary to cancel [b. Manual setting] (disconnect short-circuit connector). When [b. Manual setting] has not been cancelled, [c. Manual setting] and [d. Auto airflow volume setting] will be activated if selected, but [b Manual setting] takes precedence when the power is switched back on after power outages, etc.

(5) If this is not completed within 8 minutes, check the drive mode, air speed and air inlet temperature.

(6) When set in group control (connecting multiple indoor units with one wired remote controller), the test run operations display will disappear once the external static pressure setting check or auto airflow volume control operation check have been completed for the main unit. Decisions on sub-unit complete are not possible. The test run operation display will disappear after one hour even if the external static pressure setting check or auto airflow volume control operation check have not been completed.

CAUTION

- Be sure to check that the external static pressure is within the range for use and then make the setting. Failure to observe this may result in insufficient airflow or water leakages. Refer to Fig. 1-107 for the external static pressure setting range.
- There are cases in which automatic variable dampers and other mounted items may trigger the P12 alarm on systems that modify the external static pressure when the auto airflow volume control operations or setting check operations are carried out if high external static pressure is lowered. In this event, lower the dampers, etc., so that the external static pressure reaches its lowest level, and then carry out the auto airflow volume control operations or setting check operations.
- Be sure to set the [External Static Pressure Setting] once again after amending the airflow path for the duct or air outlet after setting the external static pressure.
- Set the air inlet temperature within the range for use. The auto airflow volume control will not function if the air inlet temperature is over 45□C or not in the fan mode.

4-6. How to Set on PC Board

1. Turn off the power breaker to halt the supply of electricity to the PC board.
2. Open the lid of electrical component box and check where the short-circuit pin on the indoor unit control PC board is located (Fig. 1-106)
3. Short circuit the applicable short-circuit pin in accordance with the selected short-circuit pin connected (Fig. 1-107).

   150 Pa : TP3 (2P: yellow) short-circuit

   140 Pa : TP1 (2P: red) short-circuit

   * Use the short-circuit connector (2P: yellow) supplied.

Table 1-9 Selection of connected short-circuit pins

External static pressure at the time of rated airflow volume	Short-circuit pin
Unusable	TP6 (2P: white)
150 Pa	TP3 (2P: yellow)
140 Pa	TP1 (2P: red)

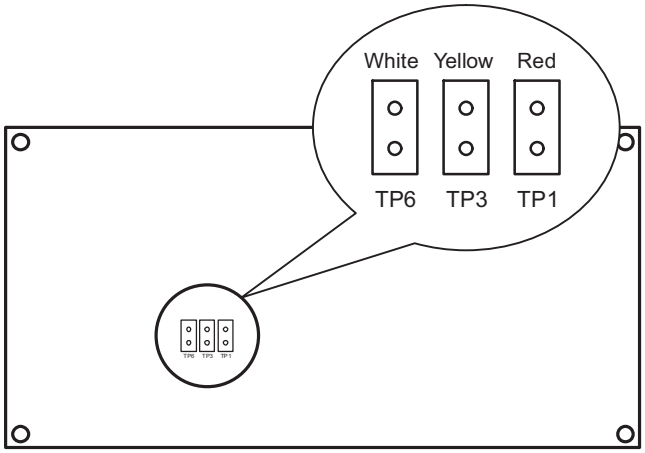

Indoor Unit control PC board

Fig. 1-106

4-7. Operating the Timer Remote Controller (CZ-RTC2)

Setting Item Code □b0□

1. Press and hold down the [🔧], [CANCEL] and [SET] buttons simultaneously for 4 or more seconds.
   (SETTING, the Unit No., Item Code and Detailed Data will blink on the remote controller's LCD display.)
2. The indoor unit numbers in the group control will be sequentially displayed whenever the Unit Select button is pressed [UNIT].
   Only the fan motor for the selected indoor unit will operate during this.
3. Specify the □b0□item code by pressing the [▲]/[▼] buttons for the temperature setting buttons and confirm the values.
   (□-001□set at shipment)
4. Press the [▲]/[▼] buttons for the time to amend the values for the set data.
   Refer to table 1-10 and Fig.1-107 and select a value between □0001□and □0015□
   Select □-002□if the auto airflow volume setting is activated.
5. Press the [SET] button.
   The display will stop blinking and remain illuminated.
6. Press the [🔧] button. The fan motor will stop operating and the LCD display will return to the normal stop mode.

Auto Airflow Volume Control Operations and External Static Pressure Setting-Check Operation

1. Press and hold down the [🔧] button for 4 or more seconds. □TEST□will be displayed on the remote controller's LCD display.
2. Press the [⏻] button to commence the test run. [Test Run] will be displayed on the remote controller's LCD display.
3. Select the fan mode and set it to □H□by pressing the [💨] button.

CAUTION

Auto airflow volume control operations and external static pressure setting-check operations will not be performed unless [H] has been selected for the fan mode.

4. The fan motor will be activated and auto airflow volume control operations or external static pressure setting-check operations will commence.
   The power of the airflow will change while these operations are in progress.
   The external static pressure setting-check operations and auto airflow volume control operations will be completed in about 3 to 30 minutes.
   The □TEST□display will be extinguished from the remote controller's LCD display.
5. Press the [⏻] button to halt the test run.

Table 1-10 Setting the external static pressure

Indoor unit		Item code
36, 45, 50, 60, 71	100, 125, 140	b0
External static pressure of the rated air flow volume (Pa)		
150	150	0015
140	140	0014
130	130	0013
120	120	0012
100	110	0011
70	100	0008
60	70	0006
50	50	0005
30	30	0003
10	10	0001
No auto airflow volume setting		-001
Auto airflow volume setting		-002

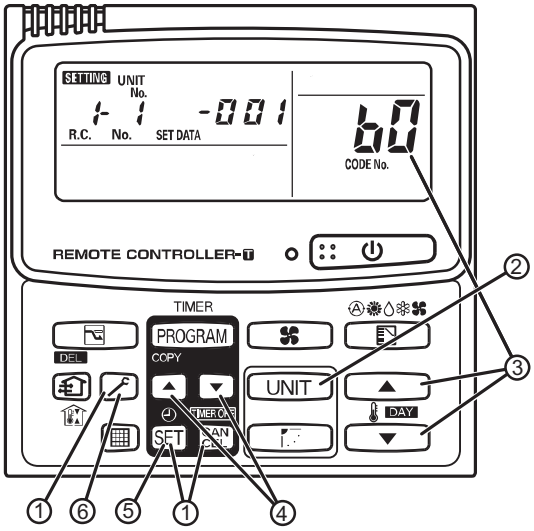

* Failure to set this parameter may result in decreased airflow and condensation.

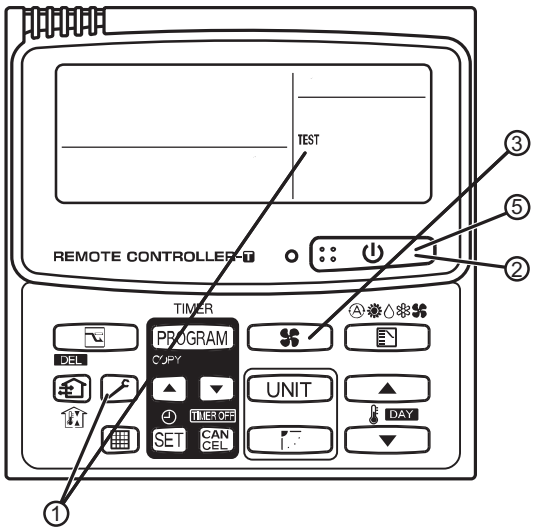

Indoor Fan Performance

		Item code □b0□																			
		00 15		00 14		00 13		00 12		00 11		00 08		00 06		00 05		00 03		00 01	
		Cooling	Heating	Cooling	Heating	Cooling	Heating	Cooling	Heating	Cooling	Heating	Cooling	Heating	Cooling	Heating	Cooling	Heating	Cooling	Heating	Cooling	Heating
Tap	⑮	H	H									Setting at shipment									
	⑭			H	H																
	⑬	M	M			H	H														
	⑫							H	H												
	⑪				M					H	H										
	⑧			M			M	M	M			H	H								
	⑥	L	L			M				M	M			H	H						
	⑤											M	M			H	H				
	③				L		L	L	L	L	L			M	M	M	M	H	H		
	①			L		L						L	L	L	L			M	M	H	H
	①-2															L	L	L	L	M	M
	①-3																			L	L

36, 45 types

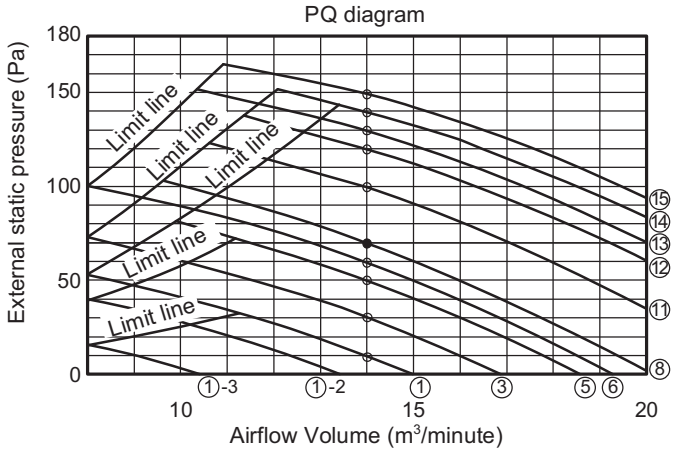

100 type

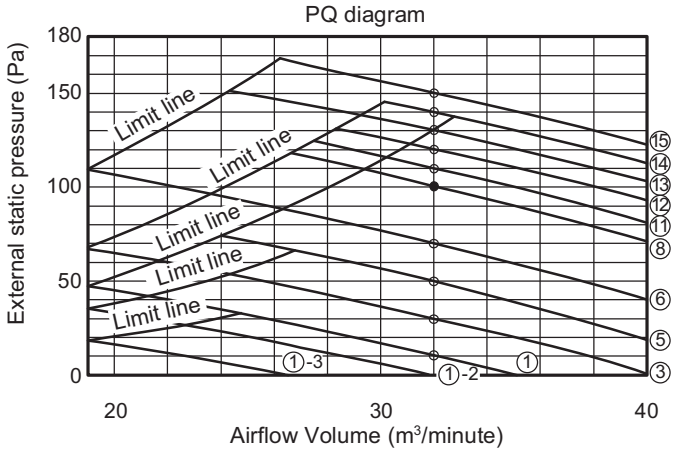

50 type

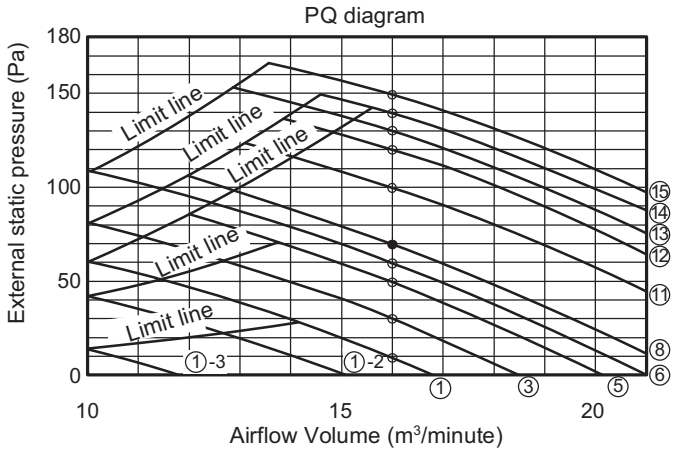

125 type

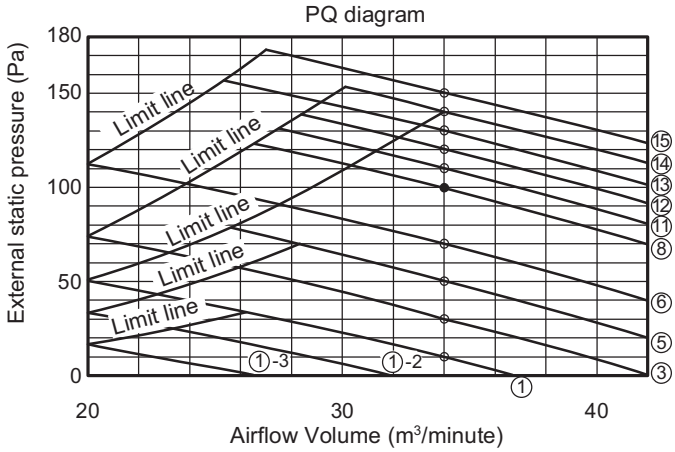

60, 71 types

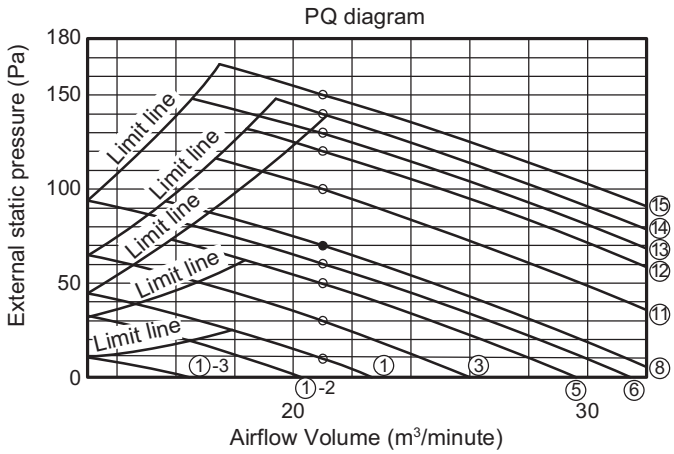

140 type

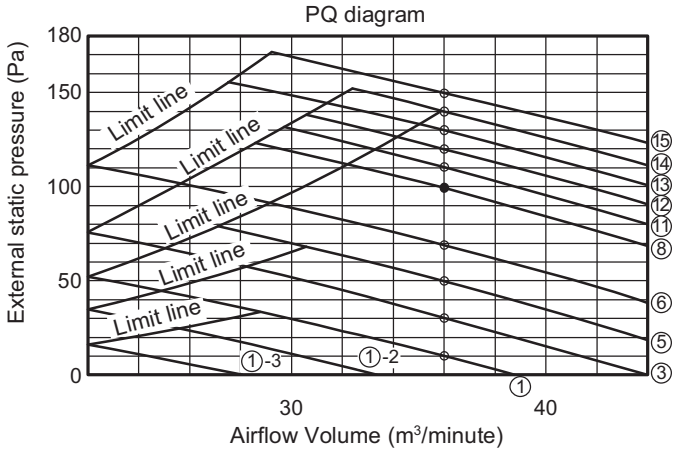

Fig. 1-107

(Low Silhouette Ducted)

Part Name	Figure	Qty	Remarks
Washer		8	For suspending indoor unit from ceiling
Flare insulator		2	For gas and liquid tubes
Insulating tape		2	For gas and liquid tubes flare nuts
Drain insulator		1	For drain hose joint
Hose band		1	For securing drain hose
Packing		1	For drain hose joint (hard material)
Packing		1	For drain hose joint (soft material)
Drain hose		1	
Operating Instructions		1	A5-size
Installation Instructions		1	Included this instructions
Short-circuit connection		1	For high static pressure (Located on the back of the electrical component box lid.)

- Use M10 for suspension bolts.
- Suspension bolts and nuts are field supply.

■ Optional Duct Frange

How to Install Duct Frange

- 4 circle duct frange (CZ-160DAF2)
- 3 circle duct frange (CZ-90DAF2)
- 2 circle duct frange (CZ-56DAF2)

1. Remove the air outlet duct frange.

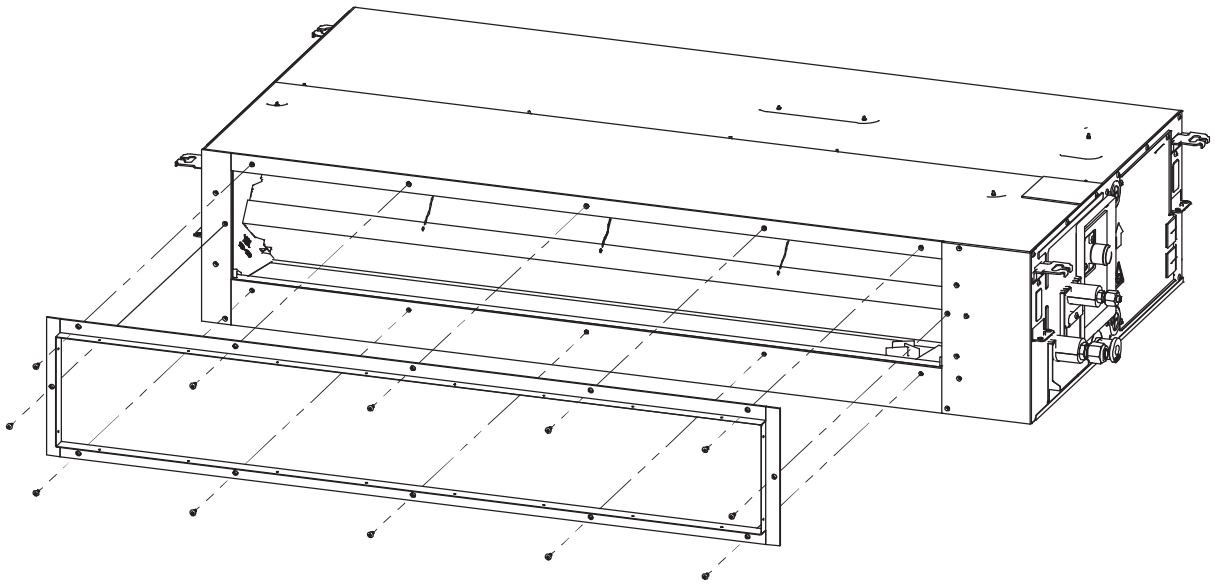

2. Attach the duct frange to the side of the unit with the supplied screws.

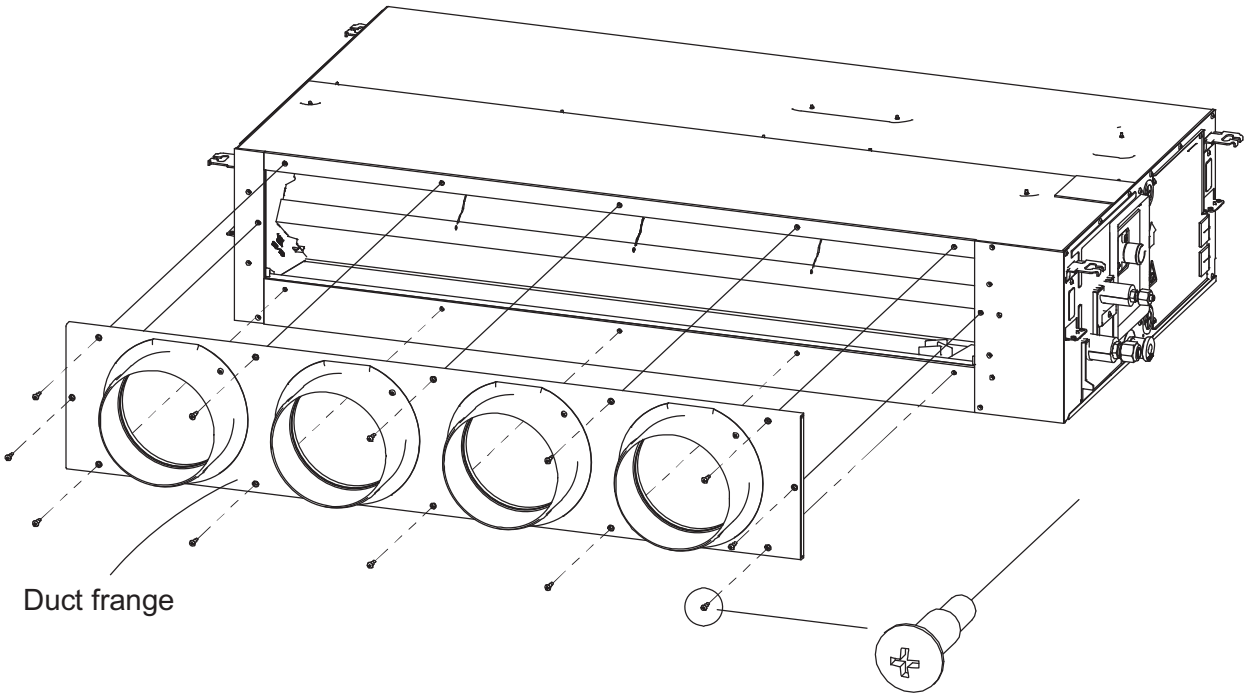

Dimensional Diagram : CZ-56DAF2

unit: mm

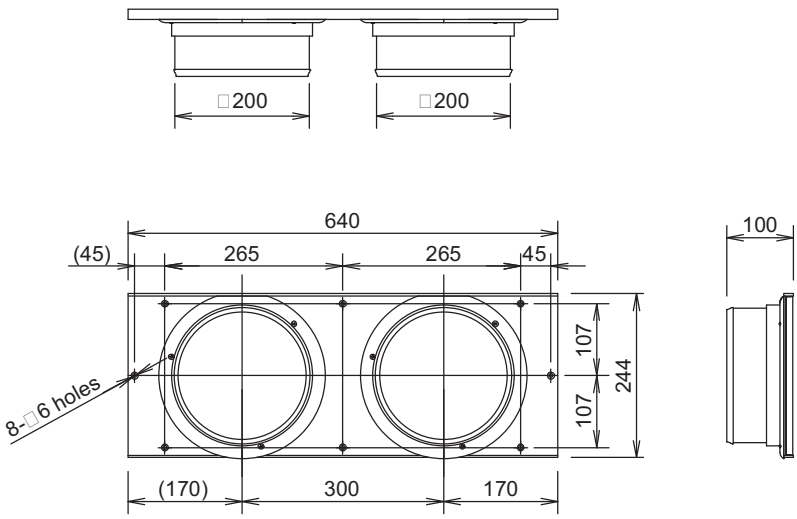

Dimensional Diagram : CZ-90DAF2

unit: mm

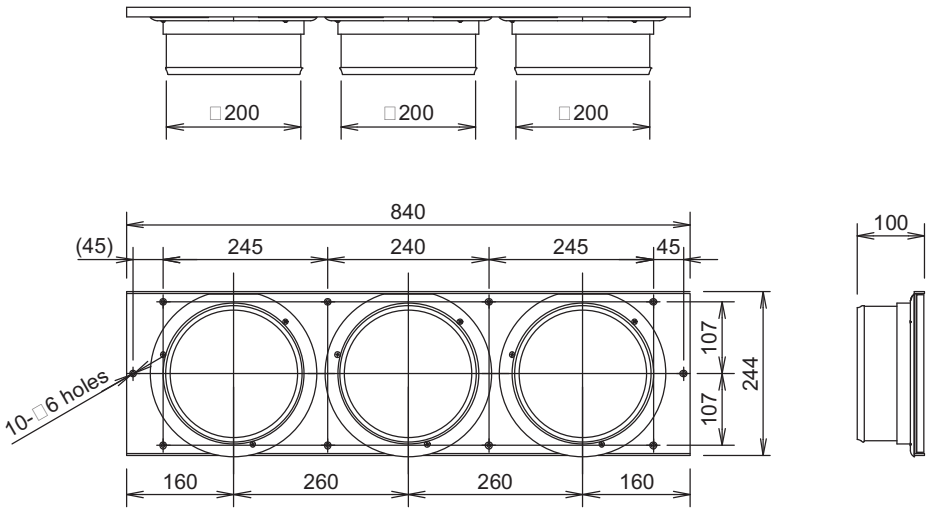

Dimensional Diagram : CZ-160DAF2

unit: mm

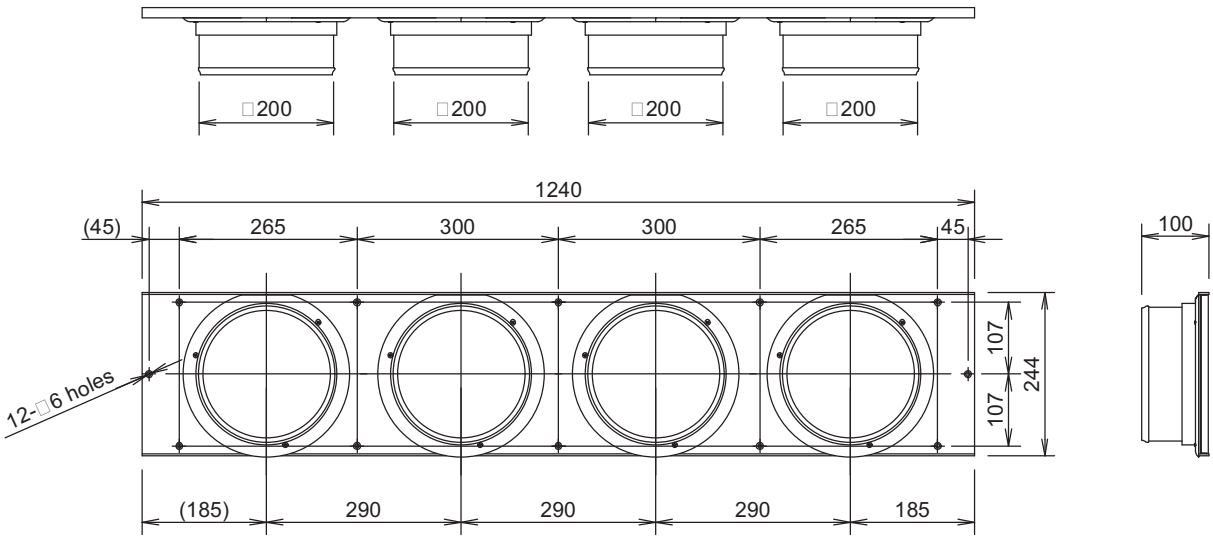

5. Ducted Type (N1)

■ SELECTING THE INSTALLATION SITE

Indoor Unit

AVOID:

- areas where leakage of flammable gas may be expected.
- places where large amounts of oil mist exist.
- direct sunlight.
- locations near heat sources which may affect the performance of the unit.
- locations where external air may enter the room directly. This may cause condensation on the air discharge ports, causing them to spray or drip water.
- locations where the remote controller will be splashed with water or affected by dampness or humidity.
- installing the remote controller behind curtains or furniture.
- locations where high-frequency emissions are generated.

DO:

- select an appropriate position from which every corner of the room can be uniformly cooled.
- select a location where the ceiling is strong enough to support the weight of the unit.
- select a location where tubing and drain pipe have the shortest run to the outdoor unit.
- allow room for operation and maintenance as well as unrestricted air flow around the unit.
- install the unit within the maximum elevation difference above or below the outdoor unit and within a total tubing length (L) from the outdoor unit as detailed in the Installation Instructions provided with the outdoor unit.
- allow room for mounting the remote controller about 1m off the floor, in an area that is not in direct sunlight or in the flow of cool air from the indoor unit.

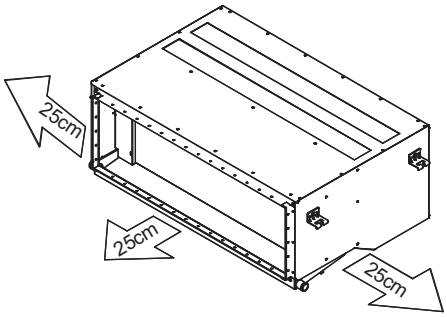

■ SELECTING THE LOCATION FOR THE INDOOR UNIT

5-1. Required Minimum Space for Installation and Service

Provide a check port on the piping side ceiling for repair and maintenance.

Install the indoor unit once the following conditions are satisfied and after receiving the customer approval.

1. The indoor unit must be within a maintenance space.
2. The indoor unit must be free from any obstacles in path of the air inlet and outlet, and must allow spreading of air throughout the room.

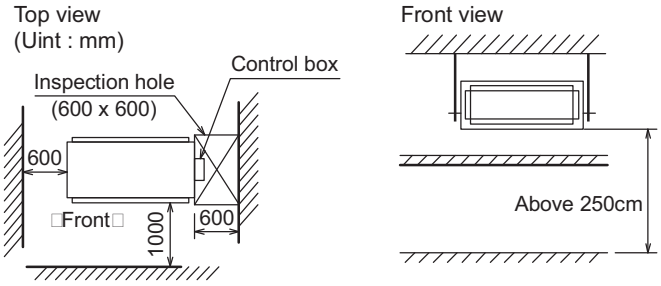

If the height from the floor to ceiling exceeds three meters, air flow distribution deteriorates and the effect is decreased.

Fig. 1-108

POSITION OF SUSPENSION BOLT

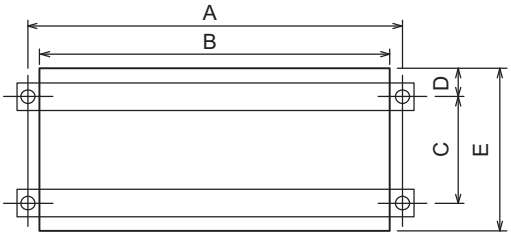

- Apply a joint-canvas between the unit and duct to absorb unnecessary vibration.
- Install the unit leaning to a drainage hole side as a figure for easy water drainage.

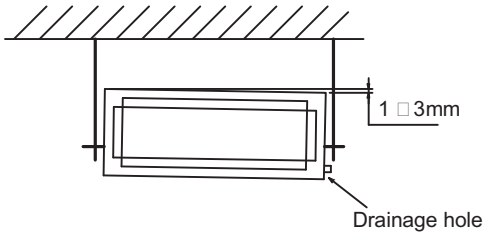

Table 1-11 Unit: mm

TYPE	A	B	C	D	E
S-36PN1E5A	840	780	523	64	650
S-45PN1E5A					
S-50PN1E5A					
S-60PN1E5A	1060	1000	523	64	650
S-71PN1E5A					
S-100PN1E5A	1260	1200	523	64	650
S-125PN1E5A					
S-140PN1E5A					

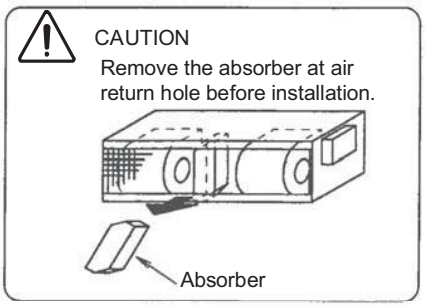

Fig. 1-109

No.	NAME	Q'TY	NOTE
1	Pipe connection (gas)	1	O.D. □12.7 Flared
2	Pipe connection (liquid)	1	O.D. □6.35 Flared
3	Drain pipe connection	2	Female screw PT1"
4	Duct connection	2	
5	Hanger	4	
6	Control box	1	

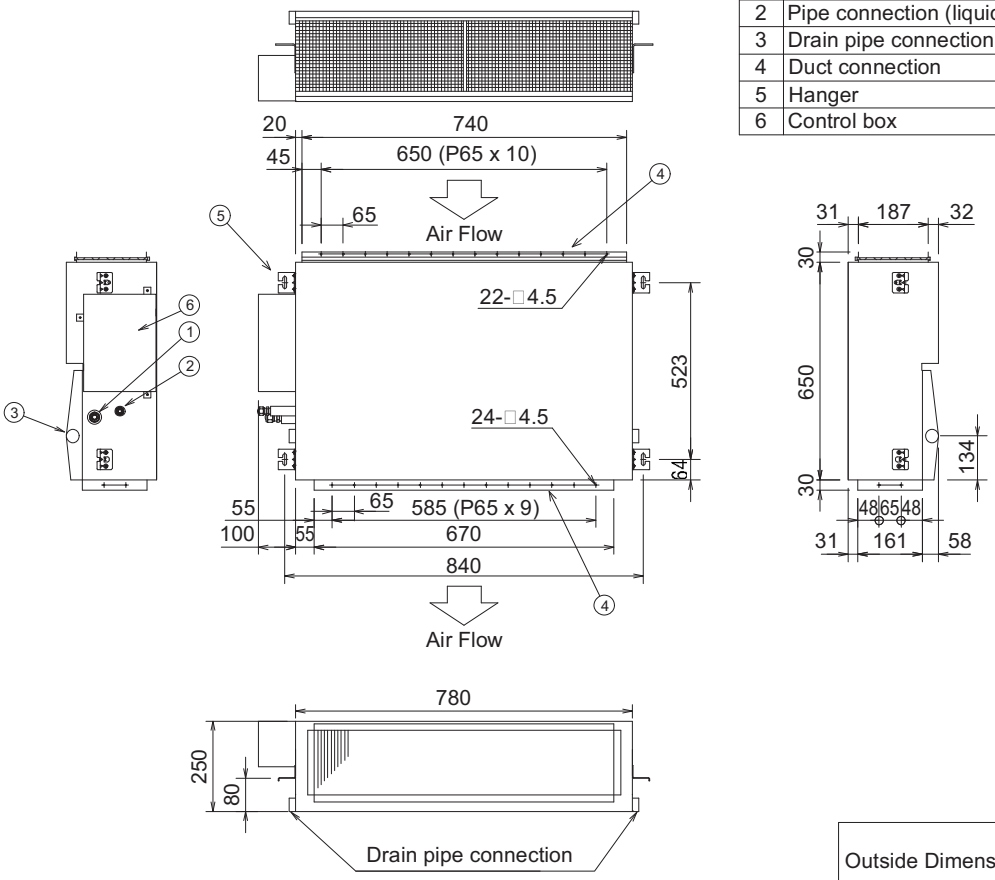

UNIT:mm

Outside Dimensions	MODEL NO.	S-36PN1E5A S-45PN1E5A S-50PN1E5A

NO.	NAME	Q'TY	NOTE
1	Pipe connection (gas)	1	O.D. □15.88 Flared
2	Pipe connection (liquid)	1	O.D. □9.52 Flared
3	Drain pipe connection	2	Female screw PT1"
4	Duct connection	2	
5	Hanger	4	
6	Control box	1	

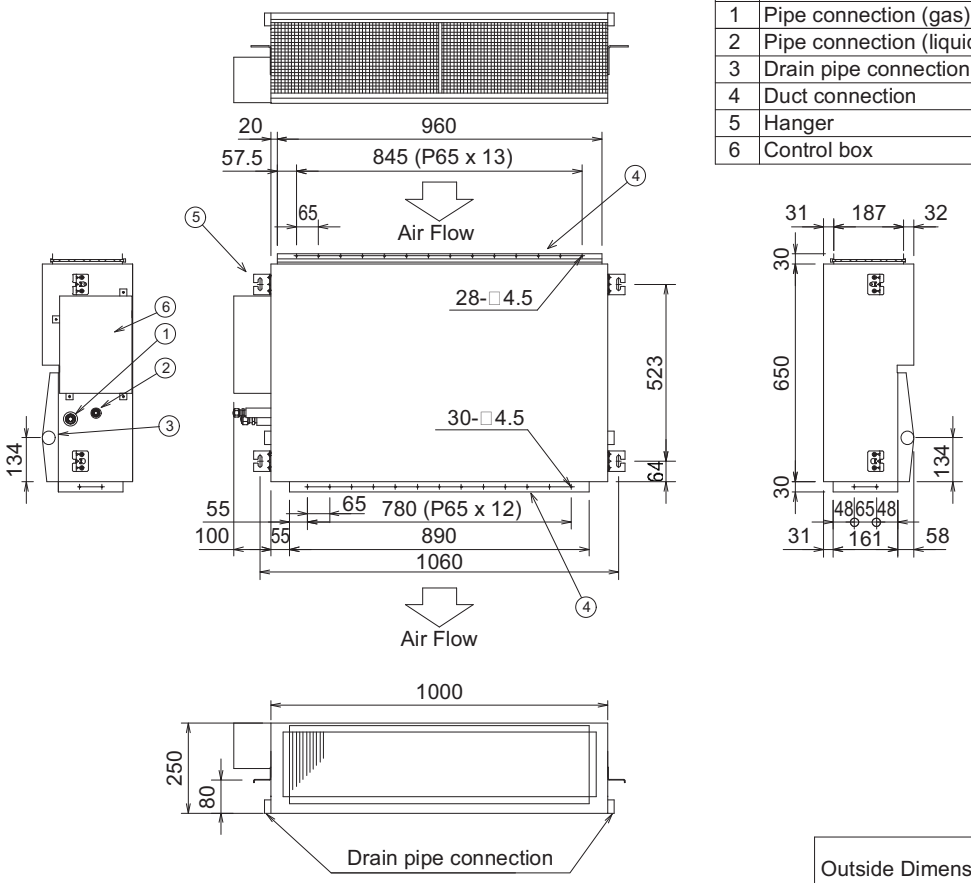

UNIT:mm

Outside Dimensions	MODEL NO.	S-60PN1E5A S-71PN1E5A

NO.	NAME	Q.TY	NOTE
1	Pipe connection (gas)	1	O.D. □15.88 Flared
2	Pipe connection (liquid)	1	O.D. □9.52 Flared
3	Drain pipe connection	2	Female screw PT1"
4	Duct connection	2	
5	Hanger	4	
6	Control box	1	

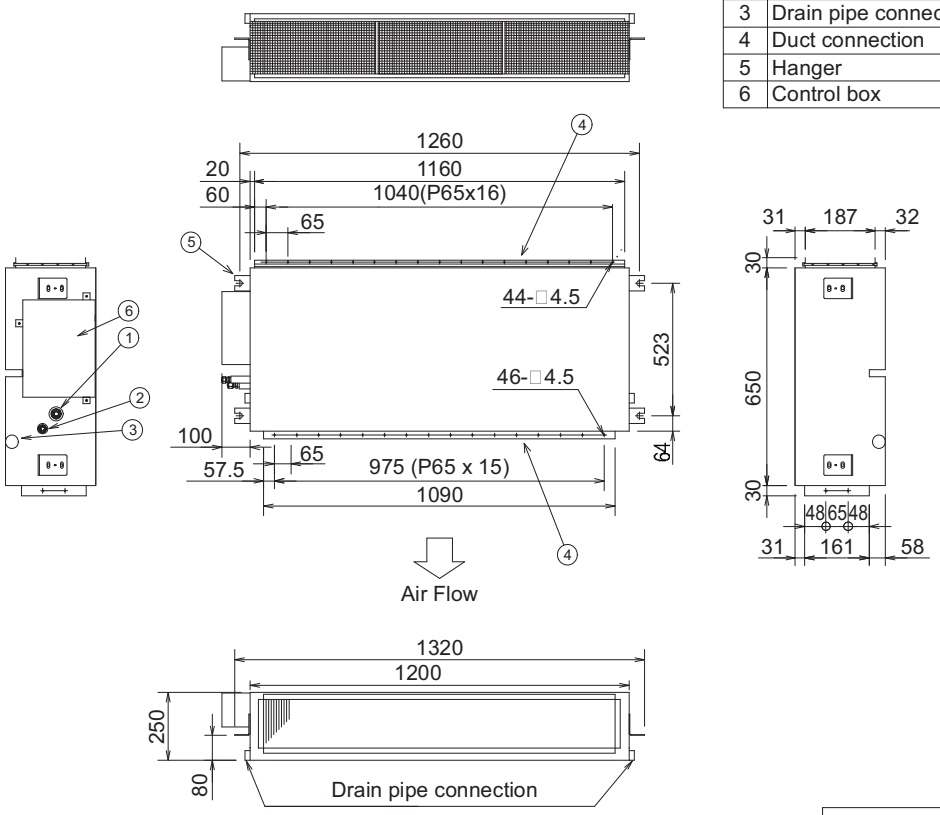

UNIT:mm

Outside Dimensions	MODEL NO.	S-100PN1E5A S-125PN1E5A S-140PN1E5A

5-2. Suspending the Indoor Unit

Depending on the ceiling type:

- Insert suspension bolts (Fig. 1-110)

  or

- Use existing ceiling supports or construct a suitable support (Fig. 1-111).

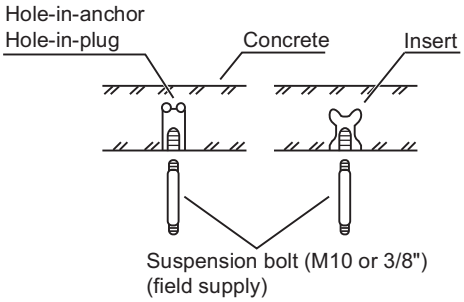

Fig. 1-110

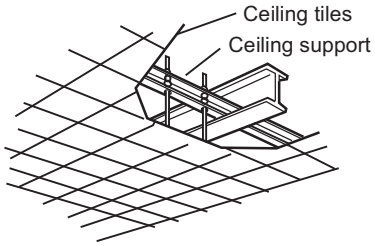

Fig. 1-111

WARNING

It is important that you use extreme care in supporting the indoor unit inside the ceiling.
Ensure that the ceiling is strong enough to support the weight of the unit.
Before suspending the unit, test the strength of each attached suspension bolt.

(1) When placing the unit inside the ceiling, determine the pitch of the suspension bolts referring to the dimensional data as shown in Fig. 1-108 and Table 1-11.
Tubing must be laid and connected inside the ceiling when suspending the unit.
If the ceiling is already constructed, lay the tubing into position for connection to the unit before placing the unit inside the ceiling.

(2) Screw in the suspension bolts allowing them to protrude from the ceiling (Fig. 1-110). (Cut the ceiling material, if necessary.)

(3) Thread the 3 hexagonal nuts and 2 washers (field supply) onto each of the 4 suspension bolts (Figs. 1-112 and 1-113).
Use 1 nut and 1 washer for the upper part, and 2 nuts and 1 washer for the lower part, so that the unit will not fall off the suspension lugs.

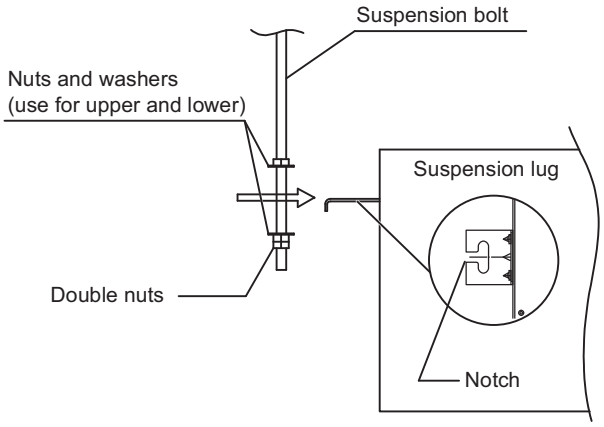

Fig. 1-112

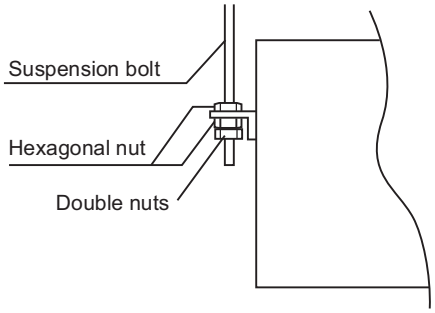

Fig. 1-113

● This shows an example of installation.

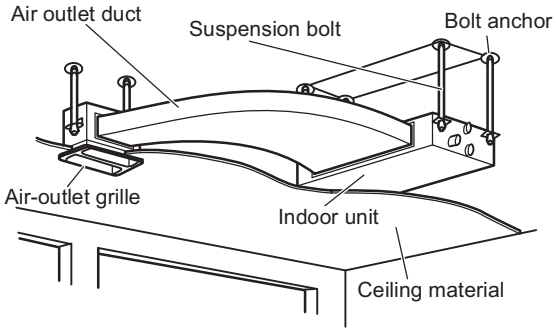

Fig. 1-114

5-3. Installing the Drain Pipe

(1) Prepare standard hard PVC pipe (O.D. 32 mm) for the drain and use the supplied hose band to prevent water leaks. The PVC pipe must be purchased separately.

CAUTION

- Do not use adhesive tape at the drain connection port on the indoor unit
- Insert the drain pipe until it contacts the socket, and then secure it tightly with the hose band.
- Do not use the supplied drain hose bent at a 90□angle. (The maximum permissible bend is 45□)
- Tighten the hose clamps so their locking nuts face upward. (Fig. 1-115)

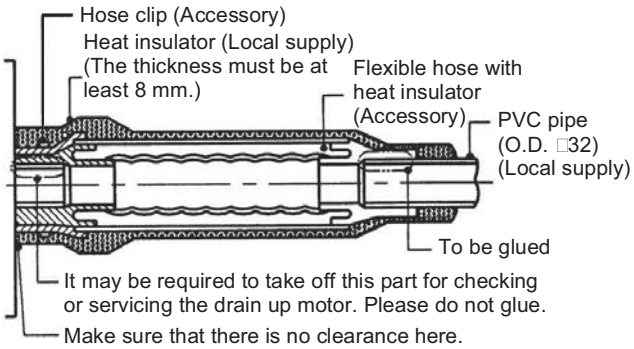

Fig. 1-115

(2) After connecting the drain pipe securely, wrap the supplied packing and drain pipe insulator around the pipe, then secure it with the vinyl clamps . (Fig. 1-116)

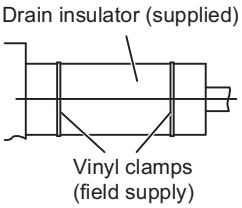

Fig. 1-116

NOTE

Make sure the drain pipe has a downward slant (1/100 or more) and that there are no water traps.

CAUTION

□ Do not install an air bleeder as this may cause water to spray from the drain pipe outlet. (Fig. 1-117)

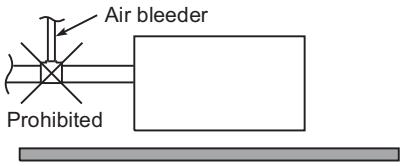

Fig. 1-117

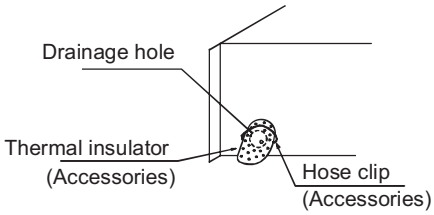

Fig. 1-118

- Do not install the pipe with an upward slant from the connection port. This will cause the drain water to flow backward and leak when the unit is not operating. (Fig. 1-119)

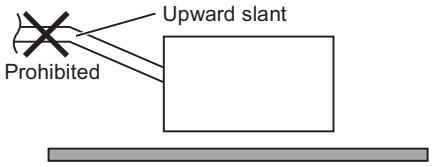

Fig. 1-119

- Do not apply force to the piping on the unit side when connecting the drain pipe. The pipe should not be allowed to hang unsupported from its connection to the unit. Fasten the pipe to a wall, frame, or other support as close to the unit as possible. (Fig. 1-120)

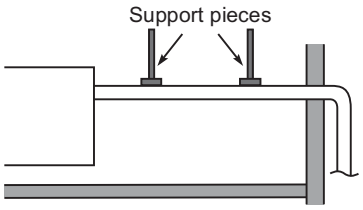

Fig. 1-120

5-4. Connecting Duct to Indoor Unit

(1) Install the duct (local supply) for the Dimension of the installation hole.
Use M5 self-tapping screws for installation.
See the Outside Dimensions.

(2) The duct connection of the air outlet needs thermal insulation.

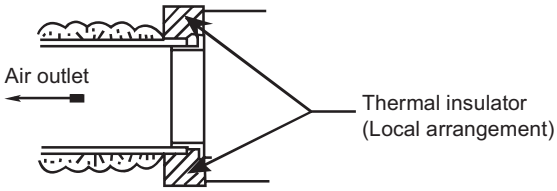

Fig. 1-121

NOTE

□ Select an air-intake grille with a filter at a local shop.

□ To get clean air and to extend the service life of the air conditioner, an air filter must be installed in the air intake. For installation and cleaning the air filter, consult your dealer or service center.

5-5. External Static Pressure Setting for Dc Fan Motor Model

Choose one of the following methods from •a□, •b□, •c□or •d□as shown in the flow chart (within the dotted lines) and then make the setting accordingly.

a. No setting modification..... : Use-as-is at shipment (there are cases in which the setting may differ from the shipment setting when reset after once setting the external static pressure.)

b. Manual setting (set with the PC board)..... : For high static pressure. Switching method with the short-circuit connector.

c. Manual setting (set with the wired remote controller) ..... : Low static pressure □ high static pressure

d. Auto airflow volume setting (set on the wired remote controller).... : Air outlet volume is automatically adjusted to the rated airflow volume with the auto airflow control drive.

Flow of External Static Pressure

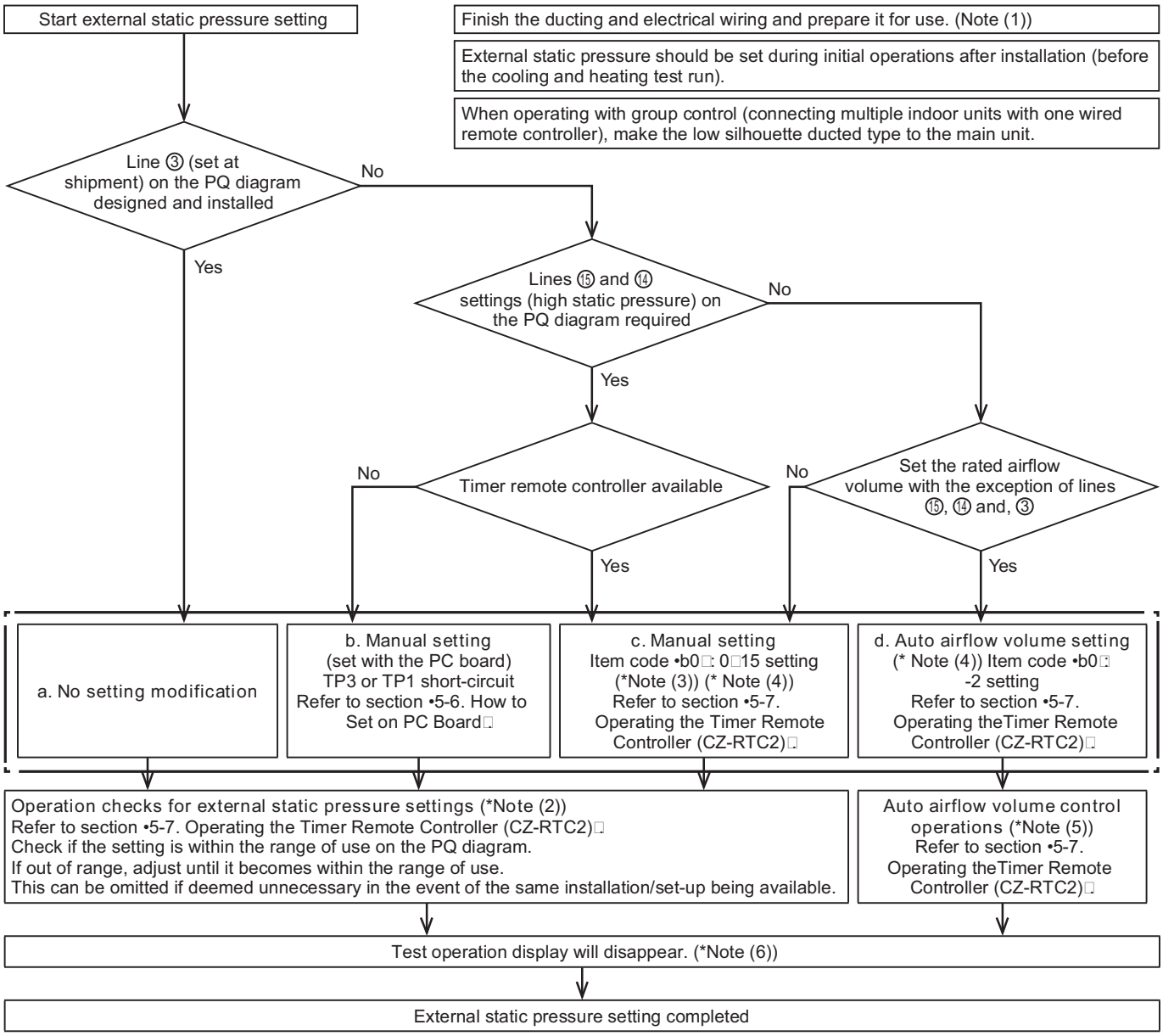

NOTE

(1) Check the following items before performing the setting-check operations or auto airflow volume operations.

1) Check to make sure that the electrical wiring and ducting have been completed. Activate the stand-by mode.
In particular, make sure that the closed damper located in the middle of the duct is open, if installed.
Also, make sure that air filters have been installed inside the air inlet duct.
Check to make sure air is not leaking from the joints.

2) If multiple air outlets and air inlets are included, adjust the airflow volume ratio of all of them until they meet the design airflow ratio.

3) Make sure the address setting has been completed.

(2) The operation check will be completed in approximately three minutes if the settings have been made correctly.
The settings will be modified if they are out of the range of use (maximum 30 minutes).
If this is not completed within 31 minutes, check whether the air speed is set to •H□or not.

(3) Refer to Table 1-13 and Fig. 1-123 for details on the relationship between the value of item code •b0□and the external static pressure.

(4) When set in group control (connecting multiple indoor units with one wired remote controller), set each indoor unit to item code •b0□.
When amending the setting after selecting [b. Manual setting] (due to airflow path changes, etc.),
it is necessary to cancel [b. Manual setting] (disconnect short-circuit connector).
When [b. Manual setting] has not been cancelled, [c. Manual setting] and [d. Auto airflow volume setting] will be activated if selected, but [b Manual setting] takes precedence when the power is switched back on after power outages, etc.

(5) If this is not completed within 8 minutes, check the drive mode, air speed and air inlet temperature.

(6) When set in group control (connecting multiple indoor units with one wired remote controller), the test run operations display will disappear once the external static pressure setting check or auto airflow volume control operation check have been completed for the main unit.
Decisions on sub-unit complete are not possible.
The test run operation display will disappear after one hour even if the external status pressure setting check or auto airflow volume control operation check have not been completed.

CAUTION

- Be sure to check that the external static pressure is within the range for use and then make the setting.
  Failure to observe this may result in insufficient airflow or water leakages.
  Refer to Fig. 1-123 for the external static pressure setting range.
- There are cases in which automatic variable dampers and other mounted items may trigger the P12 alarm on systems that modify the static pressure of outdoor units when the auto airflow volume control operations or setting check operations are carried out if high static pressure in the outdoor unit is lowered.
  In this event, lower the dampers, etc., so that the static pressure in the outdoor unit reaches its lowest level, and then carry out the auto airflow volume control operations or setting check operations.
- Be sure to set the [External Static Pressure Setting] once again after amending the airflow path for the duct or air outlet after setting the external static pressure.
- Set the air inlet temperature within the range for use.
  The auto airflow volume control will not function if the air inlet temperature is over 45□C or not in the fan mode.

5-6. How to Set on PC Board

1. Turn off the power breaker to halt the supply of electricity to the PC board.
2. Open the lid of electrical component box and check where the short-circuit pin on the indoor unit control PC board is located (Fig. 1-122)
3. Short circuit the applicable short-circuit pin in accordance with the selected short-circuit pin connected (Table 1-12).

Table 1-12 Selection of connected short-circuit pins

External static pressure at the time of rated airflow volume	Short-circuit pin
Unusable	TP6 (2P: white)
line ⑮	TP3 (2P: yellow)
line ⑭	TP1 (2P: red)

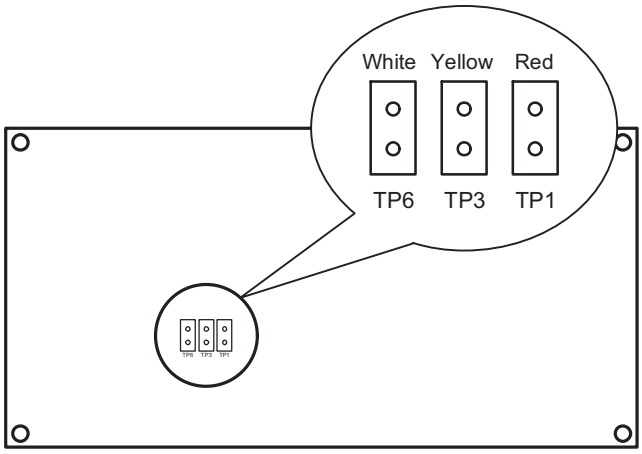

Indoor Unit control PC board

Fig. 1-122

5-7. Operating the Timer Remote Controller (CZ-RTC2)

Setting Item Code • b0

1. Press and hold down the [🔧], [CAN CEL] and [SET] buttons simultaneously for 4 or more seconds.
   (SETTING, the Unit No., Item Code and Detailed Data will blink on the remote controller's LCD display.)
2. The indoor unit numbers in the group control will be sequentially displayed whenever the Unit Select button is pressed [UNIT].
   Only the fan motor for the selected indoor unit will operate during this.
3. Specify the • b0 item code by pressing the [▲]/[▼] buttons for the temperature setting buttons and confirm the values.
   (• -001 set at shipment)
4. Press the [▲]/[▼] buttons for the time to amend the values for the set data.
   Refer to table 1-13 and Fig. 1-123 and select a value between • 0001 and • 0015
   Select • -002 if the auto airflow volume setting is activated.
5. Press the [SET] button.
   The display will stop blinking and remain illuminated.
6. Press the [🔧] button.
   The fan motor will stop operating and the LCD display will return to the normal stop mode.

Auto Airflow Volume Control Operations and External Static Pressure Setting-Check Operation

1. Press and hold down the [🔧] button for 4 or more seconds. • TEST will be displayed on the remote controller's LCD display.
2. Press the [⏻] button to commence the test run.
   [Test Run] will be displayed on the remote controller's LCD display.
3. Select the fan mode and set it to •H by pressing the [💨] button.

CAUTION

Auto airflow volume control operations and external static pressure setting-check operations will not be performed unless [H] has been selected for the fan mode.

4. The fan motor will be activated and auto airflow volume control operations or external static pressure setting-check operations will commence.
   The power of the airflow will change while these operations are in progress.
   The external static pressure setting-check operations and auto airflow volume control operations will be completed in about 3 to 30 minutes.
   The • TEST display will be extinguished from the remote controller's LCD display.
5. Press the [⏻] button to halt the test run.

Table 1-13 Setting the external static pressure

Indoor unit		Item code
60, 71	100, 125, 140	b0
External static pressure of the rated air flow volume (Pa)		
according to Indoor Unit P-Q diagram		0015
		0014
		0013
		0012
		0011
		0008
		0006
		0005
		0003
		0001
No auto airflow volume setting		-001
Auto airflow volume setting		-002

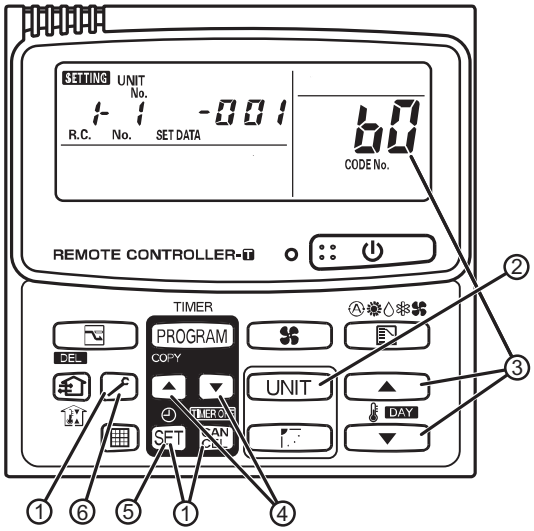

* Failure to set this parameter may result in decreased airflow and condensation.

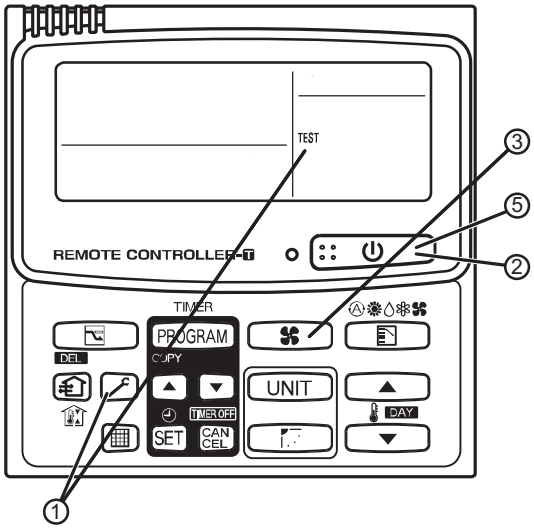

Indoor Fan Performance

		Item code • bD □																			
		00 15		00 14		00 13		00 12		00 11		00 08		00 06		00 05		00 03		00 01	
		Cooling	Heating	Cooling	Heating	Cooling	Heating	Cooling	Heating	Cooling	Heating	Cooling	Heating	Cooling	Heating	Cooling	Heating	Cooling	Heating	Cooling	Heating
Tap	⑮	H	H									Setting at shipment									
	⑭			H	H																
	⑬	M	M			H	H														
	⑫							H	H												
	⑪				M					H	H										
	⑧			M			M	M	M			H	H								
	⑥	L	L			M				M	M			H	H						
	⑤											M	M			H	H				
	③				L		L	L	L	L	L			M	M	M	M	H	H		
	①			L		L						L	L	L	L			M	M	H	H
	①-2															L	L	L	L	M	M
	①-3																			L	L

S-60PN1E5A □S-71PN1E5A P-Q diagram

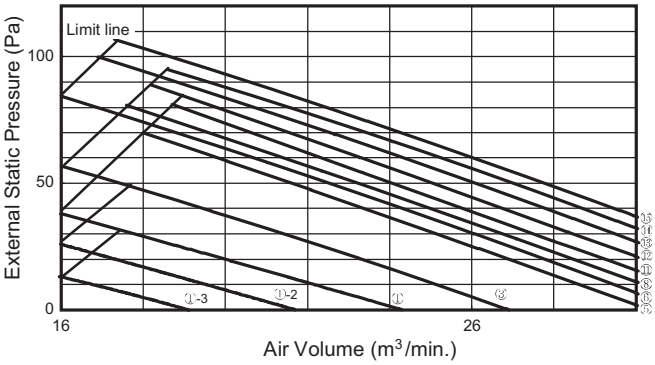

S-125PN1E5A P-Q diagram

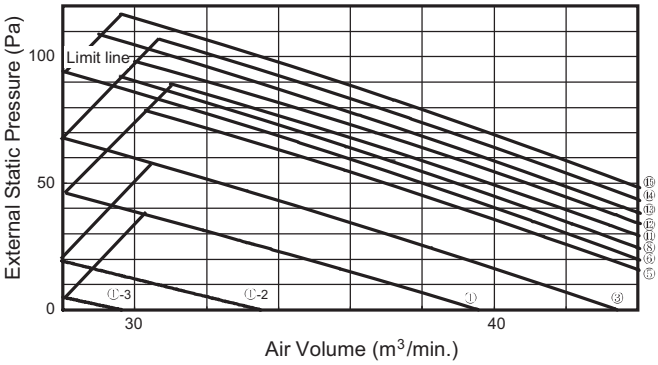

S-100PN1E5A P-Q diagram

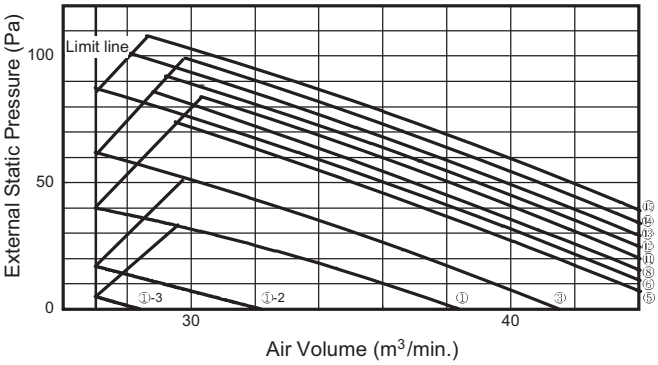

S-140PN1E5A P-Q diagram

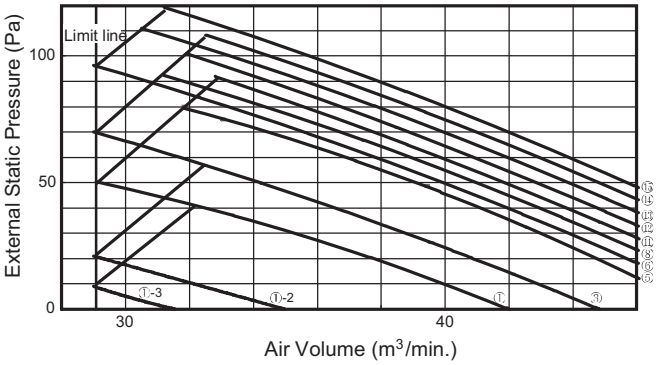

Fig. 1-123

5-8. External Static Pressure Setting for AC Fan Motor Model

To apply to following models

■ S-36PN1E5A , S-45PN1E5A , S-50PN1E5A

There are two tap connector located in indoor unit control box can be selected.

The •blue connector□is standard tap, use-as-is at shipment.

For high static pressure duct, switch Fan Motor connector to plug in
boost tap •white connector□to elevate air volume.

S-36PN1E5A

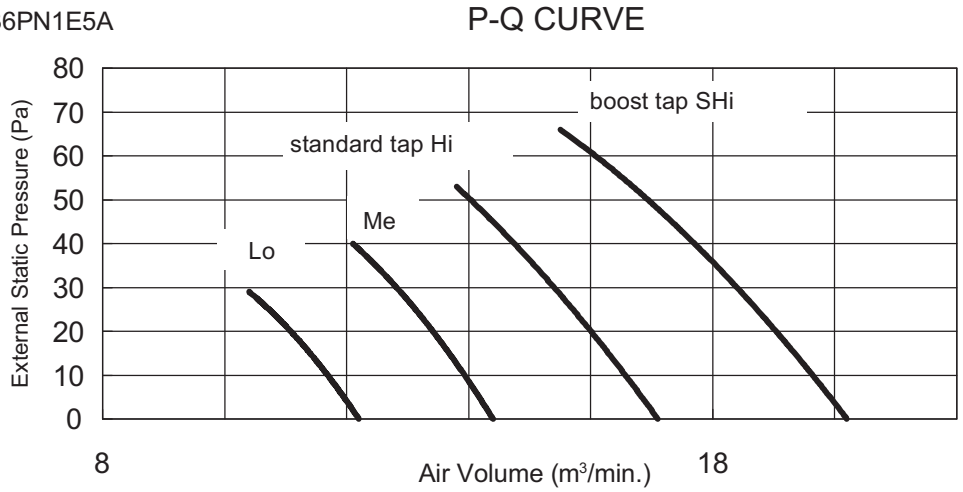

S-45PN1E5A, S-50PN1E5A

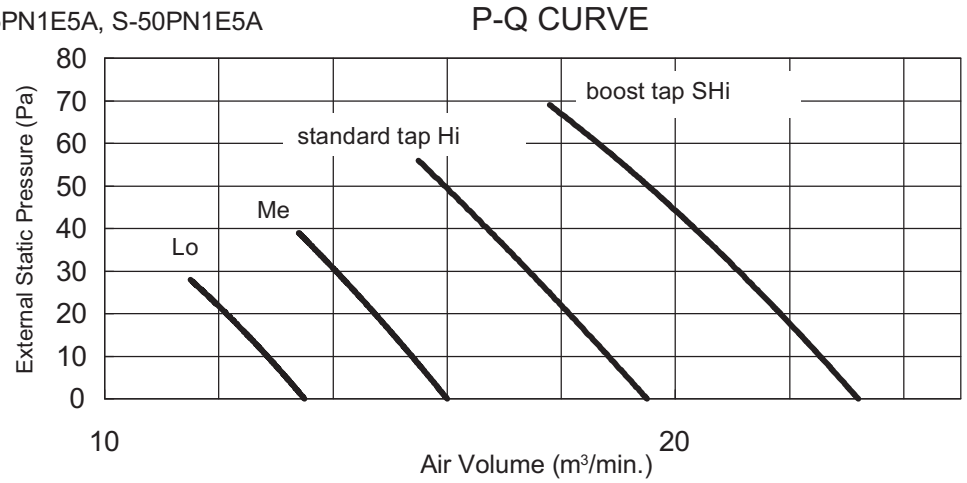

(Ducted)

Part Name	Figure	Qty	Remarks
Washer		8	For suspending indoor unit from ceiling
Flare insulator		2	For gas and liquid tubes
Hose band		5	For securing drain hose
Foam drain socket		1	For drain hole (another side of drain hose)
Drain hose		1	
Flange		2	For inlet duct installation
Screw		4	

- Use M10 for suspension bolts.
- Suspension bolts and nuts are field supply.

1-12. How to select AHU system

AHU system selection guideline

● System lineup

Capacity	Outdoor combination		Connectable AHU-kit combination	
10 kW	U-100PE1E8A	U-100PE1E5A	CZ-280PAH1	CZ-280PAH1
12.5 kW	U-125PE1E8A	U-125PE1E5A	CZ-280PAH1	CZ-280PAH1
14 kW	U-140PE1E8A	U-140PE1E5A	CZ-280PAH1	CZ-280PAH1

* Single connection type only
* Mix connection with standard indoor units is not allowed.
* The system is applicable to the above models.

● System Overview

Single connection

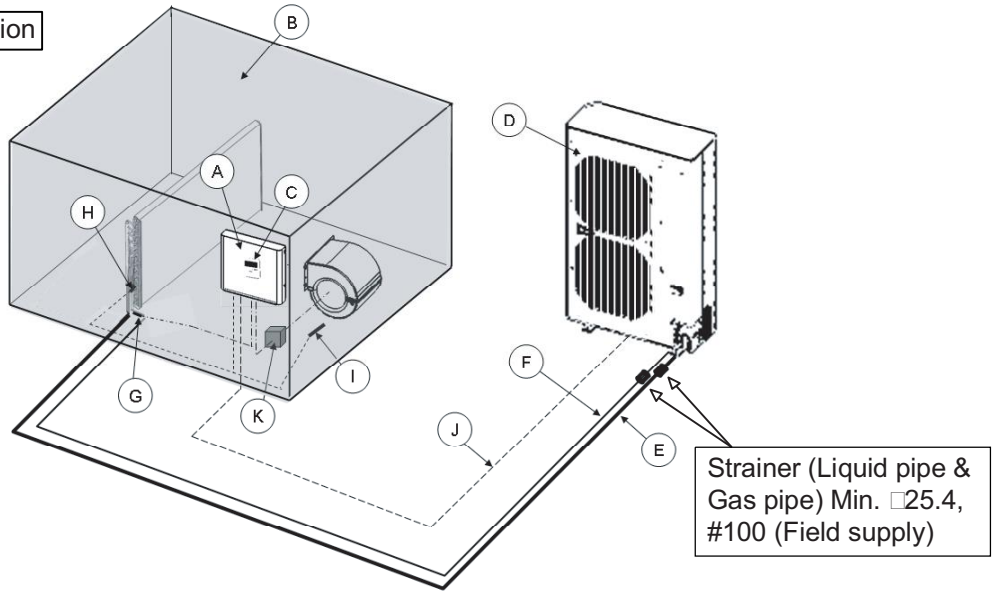

A: AHU kit controller box (with control PCB)
B: AHU equipment (Field supplied)
C: AHU kit controller (Option parts)
D: Outdoor unit
E: Gas piping (Field supplied)
F: Liquid piping (Field supplied)
G: Thermistor for Liquid pipe (E1)
H: Thermistor for Heat exchanger pipe middle (E2)
I: Thermistor for Suction air (TA)
□: Inter-unit wiring
K: Magnetic relay for operating the blower (Field supplied)

● Piping design regulation

▪ Connecting pipe dimension to heat exchanger of AHU

Capacity	Model name	Liquid pipe	Gas pipe
10-14kW	CZ-280PAH1	□9.52mm	□15.88mm

▪ System piping length (Charging with refrigerant)

At the time of shipment from the factory, the outdoor unit is charged with enough refrigerant for an equivalent pipe length of 30m.
If the equivalent piping length used is 30m or less, no additional charge will be necessary.
If the equivalent piping length is between 30 and 50m, charge with additional refrigerant according to the equivalent length given in the following table.

Capacity	Additional charge amount	Equivalent length	Minimum length
10-14kW	50g/m	50m	5m

● Installation

▪ Installation of Strainer (Field supplied)

Attach the strainer to the side of the outdoor unit for Gas & Liquid piping.
(See the •System Overview□on previous page.)

▪ Thermistor for Liquid pipe and Heat exchanger pipe middle

Liquid pipe thermistor

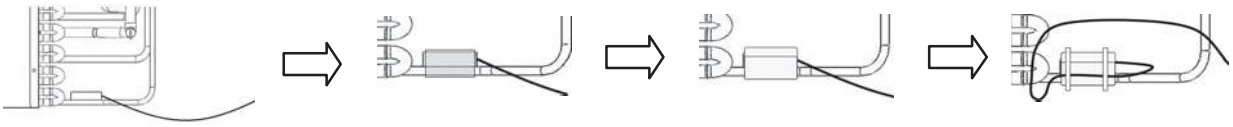

Attach the liquid pipe thermistor to the liquid pipe located in the lowest position after distributer in heat exchanger.

Cover the thermistor and pipe with aluminum tape.

Cover the aluminum tape with thermal insulation.

Thermal insulation and wiring are fixed in two bands.

Heat exchanger pipe thermistor

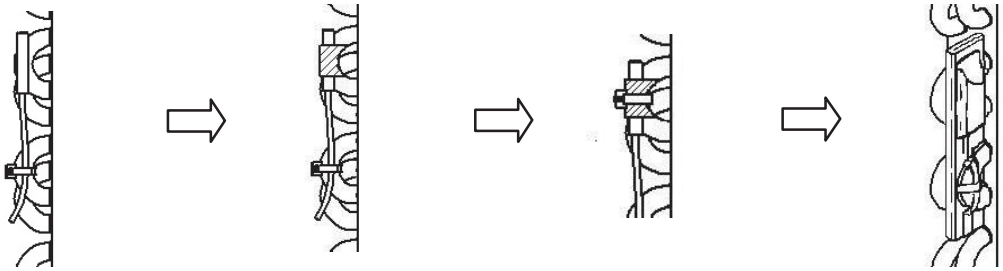

Attach the heat exchanger pipe thermistor in the middle of each pass-line (pipe) in the heat exchanger.

Cover the thermistor and pipe with aluminum tape.

The thermistor is fixed in band.
Then, it must not make tension to the wire.

Cover the aluminum tape with thermal insulation.
And also cover sensor (copper portion) with thermal insulation completely.

▪ Attachment of NOTES Label (Supplied parts)

Please be sure to apply the NOTES label at the designated area of the outdoor unit when cutting a jumper wire on the circuit board.

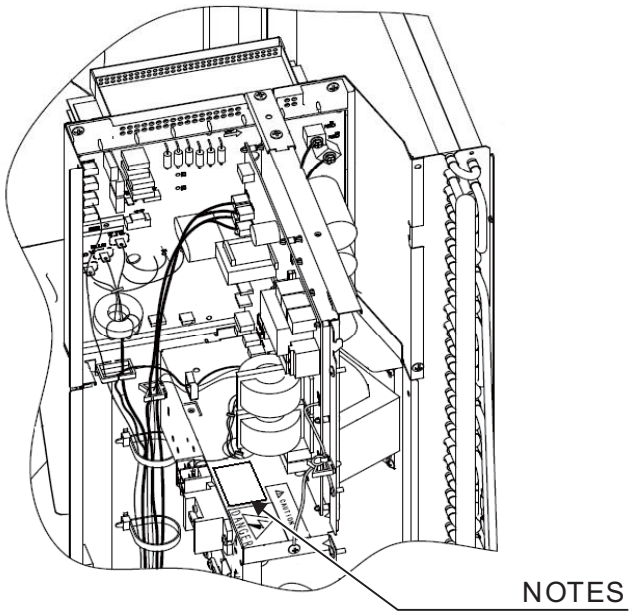

- Blower operation signal and protection signal

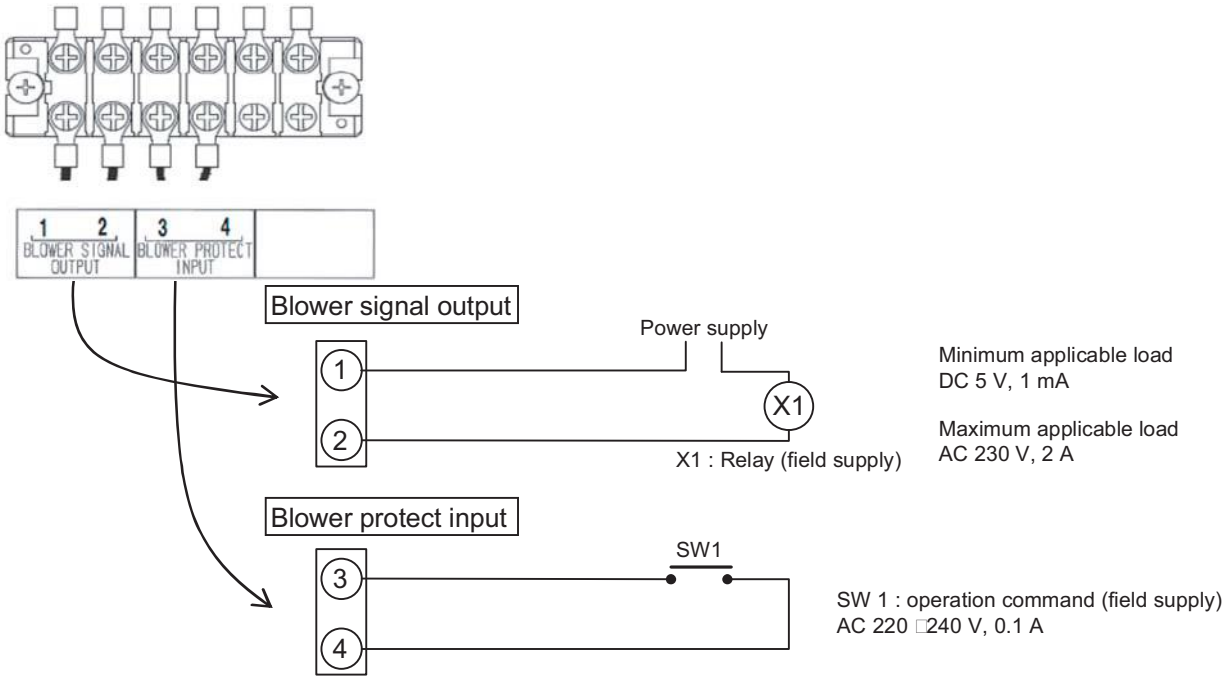

● Limitation of AHU

When the AHU is selected, there are some limitations.

- The limitation of temperature range is shown below.

		Cooling	Heating
Outdoor temperature	Min.	-10 ℃ (DB)	-20 ℃ (WB)
	Max.	43 ℃ (DB)	15 ℃ (WB)
Inlet air temperature (to the heat exchanger)	Min.	18 ℃ (DB)	16 ℃ (DB)
	Max.	32 ℃(DB) / 23℃(WB)	30 ℃ (DB)

- The limitation of Heat exchanger volume, Air volume and Front area is shown in the following Table 1-14, 1-15 and 1-16.

Table 1-14 : Inside volume of heat exchanger

Cooling Capacity		10 kW	12.5 kW	14 kW
Heat exchanger volume	Max.	2.1 dm^3	2.1 dm^3	2.1 dm^3
	Min.	1.7 dm^3	1.7 dm^3	1.7 dm^3

Table 1-15 : Air volume of heat exchanger

Cooling Capacity		10 kW	12.5 kW	14 kW
Air volume	Max.	1980 m^3/h	2100 m^3/h	2160 m^3/h
	Min.	840 m^3/h	1140 m^3/h	1140 m^3/h

Table 1-16 : Front area of heat exchanger

Cooling Capacity		10 kW	12.5 kW	14 kW
Front area	Max.	0.51 m^2	0.51 m^2	0.51 m^2
	Min.	0.43 m^2	0.43 m^2	0.43 m^2

● Restriction on the number of passes of the heat exchanger hairpin

Minimum number of passes
= Number of steps × Distance between tube sheets × Number of rows × 1.5 ×10^{-4}

□For example□
Number of steps : 12
Distance between tube sheets : 1000 [mm]
Number of rows : 3
∴ Minimum number of passes = 12 × 1000 × 3 × 1.5 × 10^{-4} = 5.4 □6 passes

1-13. Capacity Table

1. Cooling Capacity Performance Data

□Combination of Single Unit

4-Way Cassette Type

TC :Cooling Capacity
SHC :Sensible Heat Capacity
IPT :Cooling Power Consumption

unit : kW

				Outdoor air intake temp(℃ D.B.)														
Model	Power Source	Ambient Return Air		25℃			30℃			35℃			40℃			46℃		
		DB	WB	TC	SHC	IPT	TC	SHC	IPT	TC	SHC	IPT	TC	SHC	IPT	TC	SHC	IPT
S-50PU1E5A U-50PE1E5	220V 230V 240V 50Hz 1 phase	23	16	5.9	4.3	1.61	5.6	4.2	1.74	5.2	4.0	1.92	5.0	3.9	2.13	3.9	3.4	1.40
			19	6.4	3.4	1.67	6.0	3.2	1.82	5.6	3.0	2.00	5.4	2.9	2.22	4.2	2.5	1.46
			22	7.0	2.4	1.74	6.5	2.2	1.89	6.1	2.1	2.08	5.9	2.0	2.31	4.6	1.6	1.52
		25	16	5.9	4.9	1.61	5.6	4.8	1.74	5.2	4.6	1.92	5.0	4.5	2.13	3.9	3.9	1.40
			19	6.4	4.0	1.67	6.0	3.8	1.82	5.6	3.6	2.00	5.4	3.5	2.22	4.2	3.1	1.46
			22	7.0	3.0	1.74	6.5	2.8	1.89	6.1	2.7	2.08	5.9	2.6	2.31	4.6	2.1	1.52
		27	16	5.9	5.5	1.61	5.6	5.4	1.74	5.2	5.2	1.92	5.0	5.0	2.13	3.9	3.9	1.40
			19	6.4	4.5	1.67	6.0	4.4	1.82	5.6	4.2	2.00	5.4	4.1	2.22	4.2	3.7	1.46
			22	7.0	3.6	1.74	6.5	3.4	1.89	6.1	3.3	2.08	5.9	3.2	2.31	4.6	2.7	1.52
		29	16	5.9	5.9	1.61	5.6	5.6	1.74	5.2	5.2	1.92	5.0	5.0	2.13	3.9	3.9	1.40
			19	6.4	5.2	1.67	6.0	5.0	1.82	5.6	4.8	2.00	5.4	4.7	2.22	4.2	4.2	1.46
			22	7.0	4.2	1.74	6.5	4.0	1.89	6.1	3.8	2.08	5.9	3.8	2.31	4.6	3.3	1.52
		32	16	5.9	5.9	1.61	5.6	5.6	1.74	5.2	5.2	1.92	5.0	5.0	2.13	3.9	3.9	1.40
			19	6.4	5.2	1.67	6.0	5.0	1.82	5.6	4.8	2.00	5.4	4.7	2.22	4.2	4.2	1.46
			22	7.0	4.2	1.74	6.5	4.0	1.89	6.1	3.8	2.08	5.9	3.8	2.31	4.6	3.3	1.52

1-13. Capacity Table

1. Cooling Capacity Performance Data

□Combination of Single Unit

4-Way Cassette Type

TC :Cooling Capacity
SHC :Sensible Heat Capacity
IPT :Cooling Power Consumption

unit : kW

Model	Power Source	Ambient Return Air		Outdoor air intake temp(□C D.B.)														
				25□C			30□C			35□C			40□C			46□C		
		DB	WB	TC	SHC	IPT	TC	SHC	IPT	TC	SHC	IPT	TC	SHC	IPT	TC	SHC	IPT
S-60PU1E5A U-60PE1E5A	220V 230V 240V 50Hz 1 phase	23	16	7.2	5.9	1.70	7.0	5.8	1.82	6.8	5.7	1.96	6.6	5.5	1.97	6.2	5.4	1.84
			19	7.5	4.2	1.76	7.3	4.1	1.88	7.1	4.0	2.00	6.8	4.0	1.99	6.5	3.9	1.86
			22	7.9	2.7	1.84	7.7	2.6	1.95	7.4	2.5	2.06	7.1	2.4	2.01	6.7	2.3	1.88
		25	16	7.2	6.8	1.70	7.0	6.6	1.82	6.8	6.6	1.96	6.6	6.5	1.97	6.2	6.2	1.84
			19	7.5	5.2	1.76	7.3	5.1	1.88	7.1	5.0	2.00	6.8	4.8	1.99	6.5	4.7	1.86
			22	7.9	3.5	1.84	7.7	3.6	1.95	7.4	3.5	2.06	7.1	3.3	2.01	6.7	3.2	1.88
		27	16	7.2	7.2	1.70	7.0	7.0	1.82	6.8	6.8	1.96	6.6	6.6	1.97	6.2	6.2	1.84
			19	7.5	6.0	1.76	7.3	6.0	1.88	7.1	5.9	2.00	6.8	5.7	1.99	6.5	5.7	1.86
			22	7.9	4.5	1.84	7.7	4.4	1.95	7.4	4.3	2.06	7.1	4.1	2.01	6.7	4.1	1.88
		29	16	7.2	7.2	1.70	7.0	7.0	1.82	6.8	6.8	1.96	6.6	6.6	1.97	6.2	6.2	1.84
			19	7.5	6.9	1.76	7.3	6.8	1.88	7.1	6.9	2.00	6.8	6.7	1.99	6.5	6.5	1.86
			22	7.9	5.4	1.84	7.7	5.3	1.95	7.4	5.3	2.06	7.1	5.1	2.01	6.7	5.0	1.88
		32	16	7.2	7.2	1.70	7.0	7.0	1.82	6.8	6.8	1.96	6.6	6.6	1.97	6.2	6.2	1.84
			19	7.5	6.9	1.76	7.3	6.8	1.88	7.1	6.9	2.00	6.8	6.7	1.99	6.5	6.5	1.86
			22	7.9	5.4	1.84	7.7	5.3	1.95	7.4	5.3	2.06	7.1	5.1	2.01	6.7	5.0	1.88
S-71PU1E5A U-71PE1E5A (U-71PE1E8A)	220V 230V 240V 50Hz 1 phase (3 phase)	23	16	8.1	6.2	2.25	7.9	6.1	2.41	7.6	6.0	2.59	7.2	5.9	2.57	6.3	5.4	2.20
			19	8.5	4.6	2.33	8.3	4.5	2.49	8.0	4.4	2.65	7.5	4.3	2.60	6.6	3.9	2.23
			22	9.0	3.0	2.44	8.7	2.9	2.58	8.3	2.8	2.73	7.8	2.6	2.62	6.8	2.3	2.25
		25	16	8.1	7.2	2.25	7.9	7.1	2.41	7.6	6.9	2.59	7.2	6.8	2.57	6.3	6.3	2.20
			19	8.5	5.6	2.33	8.3	5.5	2.49	8.0	5.4	2.65	7.5	5.1	2.60	6.6	4.8	2.23
			22	9.0	3.9	2.44	8.7	3.8	2.58	8.3	3.7	2.73	7.8	3.5	2.62	6.8	3.2	2.25
		27	16	8.1	8.1	2.25	7.9	7.9	2.41	7.6	7.6	2.59	7.2	7.2	2.57	6.3	6.3	2.20
			19	8.5	6.5	2.33	8.3	6.4	2.49	8.0	6.2	2.65	7.5	6.0	2.60	6.6	5.7	2.23
			22	9.0	4.8	2.44	8.7	4.7	2.58	8.3	4.6	2.73	7.8	4.4	2.62	6.8	4.1	2.25
		29	16	8.1	8.1	2.25	7.9	7.9	2.41	7.6	7.6	2.59	7.2	7.2	2.57	6.3	6.3	2.20
			19	8.5	7.4	2.33	8.3	7.3	2.49	8.0	7.2	2.65	7.5	6.9	2.60	6.6	6.6	2.23
			22	9.0	5.7	2.44	8.7	5.6	2.58	8.3	5.5	2.73	7.8	5.3	2.62	6.8	5.1	2.25
		32	16	8.1	8.1	2.25	7.9	7.9	2.41	7.6	7.6	2.59	7.2	7.2	2.57	6.3	6.3	2.20
			19	8.5	7.4	2.33	8.3	7.3	2.49	8.0	7.2	2.65	7.5	6.9	2.60	6.6	6.6	2.23
			22	9.0	5.7	2.44	8.7	5.6	2.58	8.3	5.5	2.73	7.8	5.3	2.62	6.8	5.1	2.25
S-100PU1E5A U-100PE1E5A (U-100PE1E8A)	220V 230V 240V 50Hz 1 phase (3 phase)	23	16	11.4	9.1	3.00	11.4	9.1	3.23	10.9	8.9	3.43	10.2	8.7	3.57	7.4	7.4	2.92
			19	12.1	6.8	3.13	12.1	6.8	3.36	11.7	6.6	3.58	10.9	6.3	3.72	7.9	5.1	3.04
			22	13.3	4.5	3.24	13.3	4.5	3.48	12.8	4.4	3.70	11.9	4.0	3.85	8.7	3.0	3.15
		25	16	11.8	11.0	3.05	11.8	11.0	3.28	11.3	10.6	3.49	10.5	10.4	3.63	7.7	7.7	2.97
			19	12.6	8.5	3.18	12.6	8.5	3.42	12.1	8.2	3.64	11.2	8.1	3.79	8.2	6.8	3.09
			22	13.8	6.2	3.29	13.8	6.2	3.54	13.2	6.0	3.77	12.3	5.7	3.92	9.0	4.6	3.20
		27	16	12.2	12.2	3.10	12.2	12.2	3.33	11.7	11.7	3.55	10.9	10.9	3.69	8.0	8.0	3.02
			19	13.0	10.3	3.24	13.0	10.3	3.48	12.5	10.0	3.70	11.6	9.9	3.85	8.5	8.5	3.15
			22	14.2	8.0	3.35	14.2	8.0	3.60	13.7	7.8	3.83	12.7	7.5	3.98	9.3	6.2	3.25
		29	16	12.4	12.4	3.11	12.4	12.4	3.34	11.9	11.9	3.56	11.0	11.0	3.70	8.1	8.1	3.02
			19	13.2	12.2	3.25	13.2	12.2	3.49	12.7	11.8	3.71	11.8	11.7	3.86	8.6	8.6	3.15
			22	14.5	9.8	3.36	14.5	9.8	3.61	13.9	9.5	3.84	12.9	9.2	3.99	9.5	7.9	3.26
		32	16	12.5	12.5	3.12	12.5	12.5	3.35	12.1	12.1	3.56	11.2	11.2	3.71	8.2	8.2	3.03
			19	13.4	12.3	3.25	13.4	12.3	3.50	12.9	12.0	3.72	12.0	11.9	3.87	8.8	8.8	3.16
			22	14.7	9.9	3.37	14.7	9.9	3.62	14.1	9.7	3.85	13.1	9.4	4.00	9.6	8.0	3.27
S-125PU1E5A U-125PE1E5A (U-125PE1E8A)	220V 230V 240V 50Hz 1 phase (3 phase)	23	16	12.7	9.5	3.73	12.7	9.6	4.01	12.2	9.3	4.27	11.4	9.0	4.44	8.3	7.6	3.63
			19	13.6	7.3	3.89	13.6	7.3	4.18	13.1	7.0	4.45	12.2	6.8	4.63	8.9	5.4	3.78
			22	14.9	5.1	4.03	14.9	5.0	4.33	14.3	4.9	4.60	13.3	4.5	4.79	9.7	3.3	3.91
		25	16	13.2	11.3	3.80	13.2	11.4	4.08	12.7	11.0	4.34	11.8	10.7	4.51	8.6	8.6	3.69
			19	14.1	8.9	3.96	14.1	9.0	4.25	13.5	8.6	4.52	12.6	8.4	4.71	9.2	6.9	3.85
			22	15.4	6.8	4.10	15.4	6.7	4.40	14.8	6.6	4.68	13.8	6.1	4.87	10.1	4.8	3.98
		27	16	13.6	13.2	3.86	13.6	13.2	4.15	13.1	12.8	4.41	12.2	12.2	4.59	8.9	8.9	3.75
			19	14.6	10.7	4.03	14.6	10.8	4.32	14.0	10.4	4.60	13.0	10.1	4.78	9.5	8.6	3.91
			22	16.0	8.5	4.16	16.0	8.5	4.47	15.3	8.2	4.76	14.3	7.9	4.95	10.4	6.4	4.05
		29	16	13.8	13.8	3.87	13.8	13.8	4.16	13.3	13.3	4.42	12.4	12.4	4.60	9.0	9.0	3.76
			19	14.8	12.5	4.03	14.8	12.5	4.33	14.2	12.0	4.61	13.2	11.8	4.80	9.7	9.7	3.92
			22	16.2	10.2	4.17	16.2	10.2	4.48	15.6	9.9	4.77	14.5	9.6	4.96	10.6	8.0	4.06
		32	16	14.0	14.0	3.88	14.0	14.0	4.17	13.5	13.5	4.43	12.6	12.6	4.61	9.2	9.2	3.77
			19	15.0	12.7	4.04	15.0	12.6	4.35	14.4	12.2	4.62	13.4	12.0	4.81	9.8	9.8	3.93
			22	16.4	10.3	4.18	16.4	10.4	4.50	15.8	10.0	4.78	14.7	9.8	4.97	10.7	8.1	4.07
S-140PU1E5A U-140PE1E5A (U-140PE1E8A)	220V 230V 240V 50Hz 1 phase (3 phase)	23	16	14.1	10.2	4.87	14.1	10.3	5.23	13.6	10.0	5.56	12.6	9.6	5.79	9.2	8.1	4.73
			19	15.1	7.9	5.08	15.1	8.0	5.46	14.5	7.7	5.80	13.5	7.3	6.04	9.8	5.8	4.93
			22	16.5	5.7	5.25	16.5	5.6	5.64	15.9	5.4	6.00	14.8	5.0	6.25	10.8	3.7	5.10
		25	16	14.6	12.1	4.95	14.6	12.0	5.32	14.0	11.7	5.66	13.1	11.5	5.88	9.5	9.5	4.81
			19	15.6	9.7	5.16	15.6	9.7	5.55	15.0	9.3	5.90	13.9	9.0	6.14	10.2	7.4	5.02
			22	17.1	7.4	5.34	17.1	7.3	5.74	16.4	7.1	6.11	15.3	6.8	6.35	11.2	5.3	5.19
		27	16	15.1	13.9	5.03	15.1	14.0	5.41	14.5	13.6	5.75	13.5	13.4	5.98	9.9	9.9	4.89
			19	16.1	11.5	5.25	16.1	11.6	5.64	15.5	11.2	6.00	14.4	10.9	6.24	10.5	9.2	5.10
			22	17.7	9.2	5.43	17.7	9.3	5.83	17.0	8.9	6.21	15.8	8.6	6.46	11.5	6.9	5.28
		29	16	15.3	15.3	5.05	15.3	15.3	5.42	14.7	14.7	5.77	13.7	13.7	6.00	10.0	10.0	4.90
			19	16.4	13.2	5.26	16.4	13.3	5.65	15.7	12.8	6.01	14.6	12.5	6.26	10.7	10.7	5.11
			22	17.9	10.9	5.44	17.9	10.9	5.85	17.2	10.5	6.22	16.0	10.2	6.47	11.7	8.5	5.29
		32	16	15.5	15.5	5.06	15.5	15.5	5.43	14.9	14.9	5.78	13.9	13.9	6.01	10.2	10.2	4.91
			19	16.6	13.3	5.28	16.6	13.4	5.67	16.0	13.0	6.03	14.8	12.7	6.27	10.9	10.9	5.13
			22	18.2	11.0	5.46	18.2	11.1	5.86	17.5	10.7	6.24	16.3	10.4	6.49	11.9	8.6	5.30

1-13. Capacity Table

1. Cooling Capacity Performance Data

□Combination of Multiple Unit

4-Way Cassette Type

TC :Cooling Capacity
SHC :Sensible Heat Capacity
IPT :Cooling Power Consumption

unit : kW

Model	Power Source	Ambient Return Air		Outdoor air intake temp(□C D.B.)														
				25□C			30□C			35□C			40□C			46□C		
		DB	WB	TC	SHC	IPT	TC	SHC	IPT	TC	SHC	IPT	TC	SHC	IPT	TC	SHC	IPT
S-36PU1E5A×2 U-71PE1E5A (U-71PE1E8A)	220V 230V 240V 50Hz 1 phase (3 phase)	23	16	8.3	7.0	2.30	8.1	7.1	2.46	7.8	6.9	2.64	7.4	6.7	2.62	6.5	6.4	2.24
			19	8.7	5.1	2.38	8.5	5.0	2.54	8.2	4.9	2.70	7.7	4.7	2.65	6.7	4.4	2.27
			22	9.3	3.1	2.48	8.9	3.0	2.63	8.6	2.9	2.78	8.0	2.7	2.67	7.0	2.5	2.30
		25	16	8.3	8.3	2.30	8.1	8.1	2.46	7.8	7.8	2.64	7.4	7.4	2.62	6.5	6.5	2.24
			19	8.7	6.3	2.38	8.5	6.2	2.54	8.2	6.1	2.70	7.7	5.9	2.65	6.7	5.5	2.27
			22	9.3	4.3	2.48	8.9	4.2	2.63	8.6	4.1	2.78	8.0	3.9	2.67	7.0	3.6	2.30
		27	16	8.3	8.3	2.30	8.1	8.1	2.46	7.8	7.8	2.64	7.4	7.4	2.62	6.5	6.5	2.24
			19	8.7	7.4	2.38	8.5	7.5	2.54	8.2	7.3	2.70	7.7	7.0	2.65	6.7	6.7	2.27
			22	9.3	5.6	2.48	8.9	5.3	2.63	8.6	5.2	2.78	8.0	5.1	2.67	7.0	4.8	2.30
		29	16	8.3	8.3	2.30	8.1	8.1	2.46	7.8	7.8	2.64	7.4	7.4	2.62	6.5	6.5	2.24
			19	8.7	8.7	2.38	8.5	8.5	2.54	8.2	8.2	2.70	7.7	7.7	2.65	6.7	6.7	2.27
			22	9.3	6.7	2.48	8.9	6.6	2.63	8.6	6.5	2.78	8.0	6.3	2.67	7.0	6.0	2.30
		32	16	8.3	8.3	2.30	8.1	8.1	2.46	7.8	7.8	2.64	7.4	7.4	2.62	6.5	6.5	2.24
			19	8.7	8.7	2.38	8.5	8.5	2.54	8.2	8.2	2.70	7.7	7.7	2.65	6.7	6.7	2.27
			22	9.3	6.7	2.48	8.9	6.6	2.63	8.6	6.5	2.78	8.0	6.3	2.67	7.0	6.0	2.30
S-36PU1E5A×3 U-100PE1E5A (U-100PE1E8A)	220V 230V 240V 50Hz 1 phase (3 phase)	23	16	11.4	10.2	3.00	11.4	10.2	3.23	10.9	9.9	3.43	10.2	9.8	3.57	7.4	7.4	2.92
			19	12.1	7.4	3.13	12.1	7.4	3.36	11.7	7.1	3.58	10.9	6.9	3.72	7.9	5.7	3.04
			22	13.3	4.5	3.24	13.3	4.5	3.48	12.8	4.4	3.70	11.9	4.0	3.85	8.7	3.0	3.15
		25	16	11.8	11.8	3.05	11.8	11.8	3.28	11.3	11.3	3.49	10.5	10.5	3.63	7.7	7.7	2.97
			19	12.6	9.5	3.18	12.6	9.5	3.42	12.1	9.2	3.64	11.2	9.1	3.79	8.2	7.7	3.09
			22	13.8	6.6	3.29	13.8	6.6	3.54	13.2	6.4	3.77	12.3	6.2	3.92	9.0	4.9	3.20
		27	16	12.2	12.2	3.10	12.2	12.2	3.33	11.7	11.7	3.55	10.9	10.9	3.69	8.0	8.0	3.02
			19	13.0	11.9	3.24	13.0	11.9	3.48	12.5	11.5	3.70	11.6	11.3	3.85	8.5	8.5	3.15
			22	14.2	8.9	3.35	14.2	8.9	3.60	13.7	8.6	3.83	12.7	8.4	3.98	9.3	7.1	3.25
		29	16	12.4	12.4	3.11	12.4	12.4	3.34	11.9	11.9	3.56	11.0	11.0	3.70	8.1	8.1	3.02
			19	13.2	13.2	3.25	13.2	13.2	3.49	12.7	12.7	3.71	11.8	11.8	3.86	8.6	8.6	3.15
			22	14.5	11.1	3.36	14.5	11.1	3.61	13.9	10.7	3.84	12.9	10.6	3.99	9.5	9.1	3.26
		32	16	12.5	12.5	3.12	12.5	12.5	3.35	12.1	12.1	3.56	11.2	11.2	3.71	8.2	8.2	3.03
			19	13.4	13.4	3.25	13.4	13.4	3.50	12.9	12.9	3.72	12.0	12.0	3.87	8.8	8.8	3.16
			22	14.7	11.3	3.37	14.7	11.3	3.62	14.1	10.9	3.85	13.1	10.8	4.00	9.6	9.2	3.27
S-50PU1E5A×2 U-100PE1E5A (U-100PE1E8A)	220V 230V 240V 50Hz 1 phase (3 phase)	23	16	11.4	9.1	3.00	11.4	9.1	3.23	10.9	8.7	3.43	10.2	8.5	3.57	7.4	7.3	2.92
			19	12.1	6.8	3.13	12.1	6.8	3.36	11.7	6.6	3.58	10.9	6.3	3.72	7.9	5.1	3.04
			22	13.3	4.5	3.24	13.3	4.5	3.48	12.8	4.4	3.70	11.9	4.0	3.85	8.7	3.0	3.15
		25	16	11.8	10.7	3.05	11.8	10.7	3.28	11.3	10.4	3.49	10.5	10.3	3.63	7.7	7.7	2.97
			19	12.6	8.4	3.18	12.6	8.4	3.42	12.1	8.2	3.64	11.2	8.0	3.79	8.2	6.6	3.09
			22	13.8	6.2	3.29	13.8	6.2	3.54	13.2	5.9	3.77	12.3	5.7	3.92	9.0	4.4	3.20
		27	16	12.2	12.2	3.10	12.2	12.2	3.33	11.7	11.7	3.55	10.9	10.9	3.69	8.0	8.0	3.02
			19	13.0	10.2	3.24	13.0	10.2	3.48	12.5	9.9	3.70	11.6	9.7	3.85	8.5	8.4	3.15
			22	14.2	8.0	3.35	14.2	8.0	3.60	13.7	7.7	3.83	12.7	7.4	3.98	9.3	6.1	3.25
		29	16	12.4	12.4	3.11	12.4	12.4	3.34	11.9	11.9	3.56	11.0	11.0	3.70	8.1	8.1	3.02
			19	13.2	11.9	3.25	13.2	11.9	3.49	12.7	11.6	3.71	11.8	11.4	3.86	8.6	8.6	3.15
			22	14.5	9.6	3.36	14.5	9.6	3.61	13.9	9.4	3.84	12.9	9.1	3.99	9.5	7.7	3.26
		32	16	12.5	12.5	3.12	12.5	12.5	3.35	12.1	12.1	3.56	11.2	11.2	3.71	8.2	8.2	3.03
			19	13.4	12.1	3.25	13.4	12.1	3.50	12.9	11.7	3.72	12.0	11.6	3.87	8.8	8.8	3.16
			22	14.7	9.8	3.37	14.7	9.8	3.62	14.1	9.5	3.85	13.1	9.2	4.00	9.6	7.8	3.27
S-36PU1E5A×4 U-125PE1E5A (U-125PE1E8A)	220V 230V 240V 50Hz 1 phase (3 phase)	23	16	12.7	11.8	3.73	12.7	11.9	4.01	12.2	11.5	4.27	11.4	11.4	4.44	8.3	8.3	3.63
			19	13.6	8.4	3.89	13.6	8.5	4.18	13.1	8.2	4.45	12.2	8.0	4.63	8.9	6.7	3.78
			22	14.9	5.1	4.03	14.9	5.0	4.33	14.3	4.9	4.60	13.3	4.6	4.79	9.7	3.4	3.91
		25	16	13.2	13.2	3.80	13.2	13.2	4.08	12.7	12.7	4.34	11.8	11.8	4.51	8.6	8.6	3.69
			19	14.1	11.0	3.96	14.1	11.1	4.25	13.5	10.7	4.52	12.6	10.5	4.71	9.2	9.1	3.85
			22	15.4	7.6	4.10	15.4	7.6	4.40	14.8	7.3	4.68	13.8	7.1	4.87	10.1	5.8	3.98
		27	16	13.6	13.6	3.86	13.6	13.6	4.15	13.1	13.1	4.41	12.2	12.2	4.59	8.9	8.9	3.75
			19	14.6	13.7	4.03	14.6	13.8	4.32	14.0	13.3	4.60	13.0	13.0	4.78	9.5	9.5	3.91
			22	16.0	10.3	4.16	16.0	10.3	4.47	15.3	9.9	4.76	14.3	9.7	4.95	10.4	8.2	4.05
		29	16	13.8	13.8	3.87	13.8	13.8	4.16	13.3	13.3	4.42	12.4	12.4	4.60	9.0	9.0	3.76
			19	14.8	14.8	4.03	14.8	14.8	4.33	14.2	14.2	4.61	13.2	13.2	4.80	9.7	9.7	3.92
			22	16.2	12.8	4.17	16.2	12.9	4.48	15.6	12.5	4.77	14.5	12.4	4.96	10.6	10.6	4.06
		32	16	14.0	14.0	3.88	14.0	14.0	4.17	13.5	13.5	4.43	12.6	12.6	4.61	9.2	9.2	3.77
			19	15.0	15.0	4.04	15.0	15.0	4.35	14.4	14.4	4.62	13.4	13.4	4.81	9.8	9.8	3.93
			22	16.4	13.0	4.18	16.4	13.1	4.50	15.8	12.7	4.78	14.7	12.6	4.97	10.7	10.7	4.07
S-45PU1E5A×3 U-125PE1E5A (U-125PE1E8A)	220V 230V 240V 50Hz 1 phase (3 phase)	23	16	12.7	10.5	3.73	12.7	10.6	4.01	12.2	10.3	4.27	11.4	10.0	4.44	8.3	8.3	3.63
			19	13.6	7.8	3.89	13.6	7.8	4.18	13.1	7.5	4.45	12.2	7.3	4.63	8.9	6.0	3.78
			22	14.9	5.0	4.03	14.9	5.0	4.33	14.3	4.8	4.60	13.3	4.5	4.79	9.7	3.3	3.91
		25	16	13.2	12.8	3.80	13.2	12.9	4.08	12.7	12.5	4.34	11.8	11.8	4.51	8.6	8.6	3.69
			19	14.1	9.9	3.96	14.1	10.0	4.25	13.5	9.6	4.52	12.6	9.4	4.71	9.2	8.0	3.85
			22	15.4	7.1	4.10	15.4	7.1	4.40	14.8	6.9	4.68	13.8	6.6	4.87	10.1	5.2	3.98
		27	16	13.6	13.6	3.86	13.6	13.6	4.15	13.1	13.1	4.41	12.2	12.2	4.59	8.9	8.9	3.75
			19	14.6	12.1	4.03	14.6	12.2	4.32	14.0	11.8	4.60	13.0	11.5	4.78	9.5	9.5	3.91
			22	16.0	9.3	4.16	16.0	9.4	4.47	15.3	9.0	4.76	14.3	8.8	4.95	10.4	7.3	4.05
		29	16	13.8	13.8	3.87	13.8	13.8	4.16	13.3	13.3	4.42	12.4	12.4	4.60	9.0	9.0	3.76
			19	14.8	14.2	4.03	14.8	14.3	4.33	14.2	13.9	4.61	13.2	13.2	4.80	9.7	9.7	3.92
			22	16.2	11.5	4.17	16.2	11.4	4.48	15.6	11.1	4.77	14.5	10.8	4.96	10.6	9.3	4.06
		32	16	14.0	14.0	3.88	14.0	14.0	4.17	13.5	13.5	4.43	12.6	12.6	4.61	9.2	9.2	3.77
			19	15.0	14.4	4.04	15.0	14.5	4.35	14.4	14.1	4.62	13.4	13.4	4.81	9.8	9.8	3.93
			22	16.4	11.5	4.18	16.4	11.6	4.50	15.8	11.2	4.78	14.7	11.0	4.97	10.7	9.4	4.07

1-13. Capacity Table

1. Cooling Capacity Performance Data

□Combination of Multiple Unit

4-Way Cassette Type

TC :Cooling Capacity
SHC :Sensible Heat Capacity
IPT :Cooling Power Consumption

unit : kW

Model	Power Source	Ambient Return Air		Outdoor air intake temp(□C D.B.)														
				25□C			30□C			35□C			40□C			46□C		
		DB	WB	TC	SHC	IPT	TC	SHC	IPT	TC	SHC	IPT	TC	SHC	IPT	TC	SHC	IPT
S-60PU1E5A×2 U-125PE1E5A (U-125PE1E8A)	220V 230V 240V 50Hz 1 phase (3 phase)	23	16	12.7	10.2	3.73	12.7	10.3	4.01	12.2	10.0	4.27	11.4	9.7	4.44	8.3	8.3	3.63
			19	13.6	7.7	3.89	13.6	7.7	4.18	13.1	7.4	4.45	12.2	7.1	4.63	8.9	5.9	3.78
			22	14.9	5.0	4.03	14.9	5.0	4.33	14.3	4.8	4.60	13.3	4.5	4.79	9.7	3.3	3.91
		25	16	13.2	12.3	3.80	13.2	12.3	4.08	12.7	12.0	4.34	11.8	11.8	4.51	8.6	8.6	3.69
			19	14.1	9.7	3.96	14.1	9.7	4.25	13.5	9.3	4.52	12.6	9.0	4.71	9.2	7.7	3.85
			22	15.4	7.0	4.10	15.4	6.9	4.40	14.8	6.8	4.68	13.8	6.5	4.87	10.1	5.1	3.98
		27	16	13.6	13.6	3.86	13.6	13.6	4.15	13.1	13.1	4.41	12.2	12.2	4.59	8.9	8.9	3.75
			19	14.6	11.7	4.03	14.6	11.7	4.32	14.0	11.4	4.60	13.0	11.2	4.78	9.5	9.5	3.91
			22	16.0	9.1	4.16	16.0	9.1	4.47	15.3	8.8	4.76	14.3	8.5	4.95	10.4	7.1	4.05
		29	16	13.8	13.8	3.87	13.8	13.8	4.16	13.3	13.3	4.42	12.4	12.4	4.60	9.0	9.0	3.76
			19	14.8	13.6	4.03	14.8	13.8	4.33	14.2	13.3	4.61	13.2	13.1	4.80	9.7	9.7	3.92
			22	16.2	11.0	4.17	16.2	11.1	4.48	15.6	10.7	4.77	14.5	10.5	4.96	10.6	8.9	4.06
		32	16	14.0	14.0	3.88	14.0	14.0	4.17	13.5	13.5	4.43	12.6	12.6	4.61	9.2	9.2	3.77
			19	15.0	13.8	4.04	15.0	13.9	4.35	14.4	13.5	4.62	13.4	13.3	4.81	9.8	9.8	3.93
			22	16.4	11.1	4.18	16.4	11.2	4.50	15.8	10.9	4.78	14.7	10.6	4.97	10.7	8.9	4.07
S-50PU1E5A×3 U-140PE1E5A (U-140PE1E8A)	220V 230V 240V 50Hz 1 phase (3 phase)	23	16	14.1	11.4	4.87	14.1	11.5	5.23	13.6	11.2	5.56	12.6	10.9	5.79	9.2	9.2	4.73
			19	15.1	8.6	5.08	15.1	8.6	5.46	14.5	8.3	5.80	13.5	7.9	6.04	9.8	6.4	4.93
			22	16.5	5.6	5.25	16.5	5.6	5.64	15.9	5.4	6.00	14.8	5.0	6.25	10.8	3.7	5.10
		25	16	14.6	13.8	4.95	14.6	13.7	5.32	14.0	13.4	5.66	13.1	13.1	5.88	9.5	9.5	4.81
			19	15.6	10.7	5.16	15.6	10.8	5.55	15.0	10.4	5.90	13.9	10.1	6.14	10.2	8.6	5.02
			22	17.1	7.8	5.34	17.1	7.8	5.74	16.4	7.5	6.11	15.3	7.1	6.35	11.2	5.7	5.19
		27	16	15.1	15.1	5.03	15.1	15.1	5.41	14.5	14.5	5.75	13.5	13.5	5.98	9.9	9.9	4.89
			19	16.1	13.1	5.25	16.1	13.2	5.64	15.5	12.7	6.00	14.4	12.6	6.24	10.5	10.5	5.10
			22	17.7	10.1	5.43	17.7	10.1	5.83	17.0	9.8	6.21	15.8	9.5	6.46	11.5	7.8	5.28
		29	16	15.3	15.3	5.05	15.3	15.3	5.42	14.7	14.7	5.77	13.7	13.7	6.00	10.0	10.0	4.90
			19	16.4	15.4	5.26	16.4	15.4	5.65	15.7	14.9	6.01	14.6	14.6	6.26	10.7	10.7	5.11
			22	17.9	12.3	5.44	17.9	12.4	5.85	17.2	11.9	6.22	16.0	11.7	6.47	11.7	10.0	5.29
		32	16	15.5	15.5	5.06	15.5	15.5	5.43	14.9	14.9	5.78	13.9	13.9	6.01	10.2	10.2	4.91
			19	16.6	15.6	5.28	16.6	15.5	5.67	16.0	15.2	6.03	14.8	14.8	6.27	10.9	10.9	5.13
			22	18.2	12.5	5.46	18.2	12.6	5.86	17.5	12.1	6.24	16.3	11.9	6.49	11.9	10.2	5.30
S-71PU1E5A×2 U-140PE1E5A (U-140PE1E8A)	220V 230V 240V 50Hz 1 phase (3 phase)	23	16	14.1	11.0	4.87	14.1	11.0	5.23	13.6	10.8	5.56	12.6	10.5	5.79	9.2	9.0	4.73
			19	15.1	8.3	5.08	15.1	8.3	5.46	14.5	8.1	5.80	13.5	7.7	6.04	9.8	6.2	4.93
			22	16.5	5.6	5.25	16.5	5.6	5.64	15.9	5.4	6.00	14.8	5.0	6.25	10.8	3.7	5.10
		25	16	14.6	13.1	4.95	14.6	13.2	5.32	14.0	12.9	5.66	13.1	12.7	5.88	9.5	9.5	4.81
			19	15.6	10.4	5.16	15.6	10.4	5.55	15.0	10.1	5.90	13.9	9.7	6.14	10.2	8.2	5.02
			22	17.1	7.6	5.34	17.1	7.7	5.74	16.4	7.4	6.11	15.3	7.0	6.35	11.2	5.6	5.19
		27	16	15.1	15.1	5.03	15.1	15.1	5.41	14.5	14.5	5.75	13.5	13.5	5.98	9.9	9.9	4.89
			19	16.1	12.5	5.25	16.1	12.6	5.64	15.5	12.2	6.00	14.4	12.0	6.24	10.5	10.3	5.10
			22	17.7	9.8	5.43	17.7	9.9	5.83	17.0	9.5	6.21	15.8	9.1	6.46	11.5	7.4	5.28
		29	16	15.3	15.3	5.05	15.3	15.3	5.42	14.7	14.7	5.77	13.7	13.7	6.00	10.0	10.0	4.90
			19	16.4	14.7	5.26	16.4	14.7	5.65	15.7	14.1	6.01	14.6	13.9	6.26	10.7	10.7	5.11
			22	17.9	11.8	5.44	17.9	11.9	5.85	17.2	11.5	6.22	16.0	11.2	6.47	11.7	9.5	5.29
		32	16	15.5	15.5	5.06	15.5	15.5	5.43	14.9	14.9	5.78	13.9	13.9	6.01	10.2	10.2	4.91
			19	16.6	14.9	5.28	16.6	14.8	5.67	16.0	14.4	6.03	14.8	14.1	6.27	10.9	10.9	5.13
			22	18.2	12.0	5.46	18.2	12.1	5.86	17.5	11.7	6.24	16.3	11.4	6.49	11.9	9.7	5.30

1-13. Capacity Table

1. Cooling Capacity Performance Data

□Combination of Single Unit

Ceiling Type

TC :Cooling Capacity
SHC :Sensible Heat Capacity
IPT :Cooling Power Consumption

unit : kW

Model	Power Source	Ambient Return Air		Outdoor air intake temp(℃ D.B.)														
				25℃			30℃			35℃			40℃			46℃		
		DB	WB	TC	SHC	IPT	TC	SHC	IPT	TC	SHC	IPT	TC	SHC	IPT	TC	SHC	IPT
S-50PT2E5A U-50PE1E5	220V 230V 240V 50Hz 1phase	23	16	5.9	4.4	2.19	5.6	4.2	2.38	5.2	4.0	2.62	5.0	3.9	2.91	3.9	3.4	1.91
			19	6.4	3.5	2.28	6.0	3.3	2.48	5.6	3.1	2.73	5.4	3.0	3.03	4.2	2.5	1.99
			22	7.0	2.6	2.37	6.5	2.4	2.58	6.1	2.3	2.84	5.9	2.2	3.15	4.6	1.7	2.07
		25	16	5.9	5.0	2.19	5.6	4.8	2.38	5.2	4.6	2.62	5.0	4.5	2.91	3.9	3.9	1.91
			19	6.4	4.0	2.28	6.0	3.9	2.48	5.6	3.7	2.73	5.4	3.6	3.03	4.2	3.0	1.99
			22	7.0	3.2	2.37	6.5	3.0	2.58	6.1	2.8	2.84	5.9	2.7	3.15	4.6	2.2	2.07
		27	16	5.9	5.5	2.19	5.6	5.3	2.38	5.2	5.1	2.62	5.0	5.0	2.91	3.9	3.9	1.91
			19	6.4	4.6	2.28	6.0	4.4	2.48	5.6	4.2	2.73	5.4	4.1	3.03	4.2	3.6	1.99
			22	7.0	3.7	2.37	6.5	3.5	2.58	6.1	3.3	2.84	5.9	3.2	3.15	4.6	2.7	2.07
		29	16	5.9	5.9	2.19	5.6	5.6	2.38	5.2	5.2	2.62	5.0	5.0	2.91	3.9	3.9	1.91
			19	6.4	5.1	2.28	6.0	4.9	2.48	5.6	4.7	2.73	5.4	4.7	3.03	4.2	4.1	1.99
			22	7.0	4.2	2.37	6.5	4.0	2.58	6.1	3.8	2.84	5.9	3.8	3.15	4.6	3.3	2.07
		32	16	5.9	5.9	2.19	5.6	5.6	2.38	5.2	5.2	2.62	5.0	5.0	2.91	3.9	3.9	1.91
			19	6.4	5.1	2.28	6.0	4.9	2.48	5.6	4.7	2.73	5.4	4.7	3.03	4.2	4.1	1.99
			22	7.0	4.2	2.37	6.5	4.0	2.58	6.1	3.8	2.84	5.9	3.8	3.15	4.6	3.3	2.07
S-60PT2E5A U-60PE1E5A	220V 230V 240V 50Hz 1phase	23	16	7.2	5.7	1.71	7.0	5.6	1.83	6.8	5.5	1.97	6.6	5.3	1.98	6.2	5.2	1.85
			19	7.5	4.2	1.77	7.3	4.1	1.89	7.1	4.0	2.01	6.8	3.9	2.00	6.5	3.8	1.87
			22	7.9	2.8	1.85	7.7	2.7	1.96	7.4	2.6	2.07	7.1	2.4	2.02	6.7	2.3	1.89
		25	16	7.2	6.5	1.71	7.0	6.5	1.83	6.8	6.4	1.97	6.6	6.2	1.98	6.2	6.0	1.85
			19	7.5	4.9	1.77	7.3	5.0	1.89	7.1	4.9	2.01	6.8	4.7	2.00	6.5	4.6	1.87
			22	7.9	3.6	1.85	7.7	3.5	1.96	7.4	3.4	2.07	7.1	3.3	2.02	6.7	3.2	1.89
		27	16	7.2	7.2	1.71	7.0	7.0	1.83	6.8	6.8	1.97	6.6	6.6	1.98	6.2	6.2	1.85
			19	7.5	5.8	1.77	7.3	5.7	1.89	7.1	5.6	2.01	6.8	5.5	2.00	6.5	5.5	1.87
			22	7.9	4.4	1.85	7.7	4.4	1.96	7.4	4.2	2.07	7.1	4.1	2.02	6.7	3.9	1.89
		29	16	7.2	7.2	1.71	7.0	7.0	1.83	6.8	6.8	1.97	6.6	6.6	1.98	6.2	6.2	1.85
			19	7.5	6.6	1.77	7.3	6.5	1.89	7.1	6.4	2.01	6.8	6.4	2.00	6.5	6.2	1.87
			22	7.9	5.2	1.85	7.7	5.1	1.96	7.4	5.0	2.07	7.1	4.9	2.02	6.7	4.8	1.89
		32	16	7.2	7.2	1.71	7.0	7.0	1.83	6.8	6.8	1.97	6.6	6.6	1.98	6.2	6.2	1.85
			19	7.5	6.6	1.77	7.3	6.5	1.89	7.1	6.4	2.01	6.8	6.4	2.00	6.5	6.2	1.87
			22	7.9	5.2	1.85	7.7	5.1	1.96	7.4	5.0	2.07	7.1	4.9	2.02	6.7	4.8	1.89
S-71PT2E5A U-71PE1E5A (U-71PE1E8A)	220V 230V 240V 50Hz 1phase (3phase)	23	16	8.1	6.1	2.36	7.9	6.0	2.53	7.6	5.9	2.72	7.2	5.6	2.70	6.3	5.1	2.31
			19	8.5	4.6	2.45	8.3	4.5	2.61	8.0	4.4	2.78	7.5	4.2	2.72	6.6	3.8	2.34
			22	9.0	3.3	2.55	8.7	3.0	2.71	8.3	2.9	2.86	7.8	2.8	2.75	6.8	2.4	2.36
		25	16	8.1	6.9	2.36	7.9	6.8	2.53	7.6	6.6	2.72	7.2	6.4	2.70	6.3	5.9	2.31
			19	8.5	5.4	2.45	8.3	5.3	2.61	8.0	5.1	2.78	7.5	5.0	2.72	6.6	4.6	2.34
			22	9.0	4.0	2.55	8.7	3.9	2.71	8.3	3.7	2.86	7.8	3.5	2.75	6.8	3.2	2.36
		27	16	8.1	7.7	2.36	7.9	7.6	2.53	7.6	7.4	2.72	7.2	7.2	2.70	6.3	6.3	2.31
			19	8.5	6.2	2.45	8.3	6.1	2.61	8.0	6.0	2.78	7.5	5.7	2.72	6.6	5.4	2.34
			22	9.0	4.8	2.55	8.7	4.7	2.71	8.3	4.5	2.86	7.8	4.3	2.75	6.8	4.0	2.36
		29	16	8.1	8.1	2.36	7.9	7.9	2.53	7.6	7.6	2.72	7.2	7.2	2.70	6.3	6.3	2.31
			19	8.5	7.1	2.45	8.3	7.0	2.61	8.0	6.8	2.78	7.5	6.5	2.72	6.6	6.3	2.34
			22	9.0	5.6	2.55	8.7	5.5	2.71	8.3	5.2	2.86	7.8	5.2	2.75	6.8	4.7	2.36
		32	16	8.1	8.1	2.36	7.9	7.9	2.53	7.6	7.6	2.72	7.2	7.2	2.70	6.3	6.3	2.31
			19	8.5	7.1	2.45	8.3	7.0	2.61	8.0	6.8	2.78	7.5	6.5	2.72	6.6	6.3	2.34
			22	9.0	5.6	2.55	8.7	5.5	2.71	8.3	5.2	2.86	7.8	5.2	2.75	6.8	4.7	2.36
S-100PT2E5A U-100PE1E5A (U-100PE1E8A)	220V 230V 240V 50Hz 1phase (3phase)	23	16	11.4	8.5	3.12	11.4	8.5	3.36	10.9	8.2	3.57	10.2	8.1	3.71	7.4	6.8	3.03
			19	12.1	6.3	3.26	12.1	6.3	3.50	11.7	6.2	3.72	10.9	6.0	3.87	7.9	4.8	3.17
			22	13.3	4.2	3.37	13.3	4.2	3.62	12.8	4.2	3.85	11.9	3.8	4.01	8.7	2.8	3.28
		25	16	11.8	10.2	3.18	11.8	10.2	3.41	11.3	9.8	3.63	10.5	9.7	3.78	7.7	7.3	3.09
			19	12.6	8.0	3.31	12.6	8.0	3.56	12.1	7.8	3.79	11.2	7.6	3.94	8.2	6.3	3.22
			22	13.8	5.9	3.43	13.8	5.9	3.68	13.2	5.6	3.92	12.3	5.4	4.07	9.0	4.2	3.33
		27	16	12.2	11.6	3.23	12.2	11.6	3.47	11.7	11.1	3.69	10.9	10.3	3.84	8.0	7.6	3.14
			19	13.0	9.7	3.37	13.0	9.7	3.62	12.5	9.4	3.85	11.6	9.2	4.00	8.5	7.9	3.27
			22	14.2	7.6	3.49	14.2	7.6	3.74	13.7	7.3	3.98	12.7	7.0	4.14	9.3	5.8	3.39
		29	16	12.4	11.8	3.24	12.4	11.8	3.48	11.9	11.3	3.70	11.0	10.4	3.85	8.1	7.7	3.15
			19	13.2	11.3	3.38	13.2	11.3	3.63	12.7	11.0	3.86	11.8	10.8	4.01	8.6	8.2	3.28
			22	14.5	9.1	3.49	14.5	9.1	3.75	13.9	8.9	3.99	12.9	8.6	4.15	9.5	7.3	3.39
		32	16	12.5	11.9	3.25	12.5	11.9	3.49	12.1	11.5	3.71	11.2	10.6	3.86	8.2	7.8	3.15
			19	13.4	11.5	3.39	13.4	11.5	3.64	12.9	11.1	3.87	12.0	11.0	4.02	8.8	8.3	3.29
			22	14.7	9.3	3.50	14.7	9.3	3.76	14.1	9.0	4.00	13.1	8.8	4.16	9.6	7.4	3.40
S-125PT2E5A U-125PE1E5A (U-125PE1E8A)	220V 230V 240V 50Hz 1phase (3phase)	23	16	12.7	9.2	3.94	12.7	9.3	4.24	12.2	8.9	4.51	11.4	8.7	4.69	8.3	7.2	3.83
			19	13.6	7.1	4.11	13.6	7.1	4.42	13.1	6.9	4.70	12.2	6.6	4.89	8.9	5.2	4.00
			22	14.9	5.0	4.26	14.9	5.1	4.57	14.3	4.8	4.86	13.3	4.5	5.06	9.7	3.2	4.13
		25	16	13.2	10.9	4.01	13.2	10.9	4.31	12.7	10.6	4.58	11.8	10.3	4.77	8.6	8.4	3.90
			19	14.1	8.8	4.18	14.1	8.7	4.49	13.5	8.4	4.78	12.6	8.1	4.97	9.2	6.7	4.06
			22	15.4	6.5	4.33	15.4	6.6	4.65	14.8	6.3	4.95	13.8	6.0	5.14	10.1	4.7	4.20
		27	16	13.6	12.6	4.08	13.6	12.7	4.38	13.1	12.3	4.66	12.2	12.0	4.85	8.9	8.7	3.96
			19	14.6	10.4	4.25	14.6	10.5	4.57	14.0	10.1	4.86	13.0	9.8	5.05	9.5	8.3	4.13
			22	16.0	8.3	4.40	16.0	8.3	4.73	15.3	8.0	5.03	14.3	7.7	5.23	10.4	6.2	4.27
		29	16	13.8	13.5	4.09	13.8	13.5	4.39	13.3	13.0	4.67	12.4	12.2	4.86	9.0	8.8	3.97
			19	14.8	12.0	4.26	14.8	12.0	4.58	14.2	11.6	4.87	13.2	11.3	5.07	9.7	9.5	4.14
			22	16.2	9.8	4.41	16.2	9.9	4.74	15.6	9.6	5.04	14.5	9.2	5.24	10.6	7.8	4.28
		32	16	14.0	13.7	4.10	14.0	13.7	4.40	13.5	13.2	4.68	12.6	12.4	4.87	9.2	9.0	3.98
			19	15.0	12.2	4.27	15.0	12.2	4.59	14.4	11.7	4.88	13.4	11.5	5.08	9.8	9.6	4.15
			22	16.4	10.0	4.42	16.4	10.0	4.75	15.8	9.7	5.05	14.7	9.3	5.25	10.7	7.8	4.29

1-13. Capacity Table

1. Cooling Capacity Performance Data

□Combination of Single Unit

Ceiling Type

TC :Cooling Capacity
SHC :Sensible Heat Capacity
IPT :Cooling Power Consumption

unit : kW

				Outdoor air intake temp(□C D.B.)														
Model	Power Source	Ambient Return Air		25□C			30□C			35□C			40□C			46□C		
		DB	WB	TC	SHC	IPT	TC	SHC	IPT	TC	SHC	IPT	TC	SHC	IPT	TC	SHC	IPT
S-140PT2E5A U-140PE1E5A (U-140PE1E8A)	220V 230V 240V 50Hz 1phase (3phase)	23	16	13.6	9.6	4.58	13.6	9.6	4.93	13.1	9.3	5.24	12.2	9.0	5.45	8.9	7.5	4.45
			19	14.6	7.5	4.78	14.6	7.5	5.14	14.0	7.2	5.47	13.0	6.9	5.68	9.5	5.4	4.65
			22	16.0	5.5	4.95	16.0	5.4	5.32	15.4	5.3	5.65	14.3	4.8	5.88	10.4	3.5	4.81
		25	16	14.1	11.3	4.66	14.1	11.3	5.01	13.6	11.0	5.33	12.6	10.7	5.54	9.2	9.1	4.53
			19	15.1	9.2	4.86	15.1	9.1	5.22	14.5	8.8	5.56	13.5	8.5	5.78	9.9	7.0	4.72
			22	16.5	6.9	5.03	16.5	7.0	5.40	15.9	6.7	5.75	14.8	6.4	5.98	10.8	4.9	4.89
		27	16	14.6	13.0	4.74	14.6	13.1	5.09	14.0	12.7	5.42	13.1	12.5	5.63	9.5	9.4	4.60
			19	15.6	10.9	4.94	15.6	10.8	5.31	15.0	10.4	5.65	14.0	10.2	5.88	10.2	8.6	4.80
			22	17.1	8.6	5.11	17.1	8.7	5.49	16.4	8.4	5.85	15.3	8.0	6.08	11.2	6.5	4.97
		29	16	14.8	14.6	4.75	14.8	14.6	5.10	14.3	14.1	5.43	13.3	13.1	5.65	9.7	9.6	4.62
			19	15.8	12.3	4.96	15.8	12.4	5.32	15.2	12.0	5.66	14.2	11.8	5.89	10.4	10.1	4.81
			22	17.3	10.2	5.13	17.3	10.3	5.51	16.7	10.0	5.86	15.5	9.5	6.09	11.3	7.9	4.98
		32	16	15.0	14.8	4.76	15.0	14.8	5.12	14.5	14.3	5.44	13.4	13.2	5.66	9.8	9.7	4.63
			19	16.1	12.5	4.97	16.1	12.6	5.34	15.4	12.1	5.68	14.4	11.9	5.91	10.5	10.2	4.83
			22	17.6	10.4	5.14	17.6	10.5	5.52	16.9	10.1	5.87	15.7	9.7	6.11	11.5	8.0	4.99

1-13. Capacity Table

1. Cooling Capacity Performance Data

□Combination of Multiple Unit

Ceiling Type

TC :Cooling Capacity
SHC :Sensible Heat Capacity
IPT :Cooling Power Consumption

unit : kW

Model	Power Source	Ambient Return Air		Outdoor air intake temp(□C D.B.)														
				25□C			30□C			35□C			40□C			46□C		
		DB	WB	TC	SHC	IPT	TC	SHC	IPT	TC	SHC	IPT	TC	SHC	IPT	TC	SHC	IPT
S-36PT2E5A×2 U-71PE1E5A (U-71PE1E8A)	220V 230V 240V 50Hz 1phase (3 phase)	23	16	8.1	6.7	2.36	7.9	6.7	2.53	7.6	6.5	2.72	7.2	6.4	2.70	6.3	6.0	2.31
			19	8.5	4.9	2.45	8.3	5.0	2.61	8.0	4.8	2.78	7.5	4.5	2.72	6.6	4.2	2.34
			22	9.0	3.2	2.55	8.7	3.1	2.71	8.3	3.0	2.86	7.8	2.8	2.75	6.8	2.4	2.36
		25	16	8.1	7.8	2.36	7.9	7.7	2.53	7.6	7.6	2.72	7.2	7.2	2.70	6.3	6.3	2.31
			19	8.5	6.0	2.45	8.3	5.9	2.61	8.0	5.8	2.78	7.5	5.6	2.72	6.6	5.2	2.34
			22	9.0	4.3	2.55	8.7	4.2	2.71	8.3	4.1	2.86	7.8	3.9	2.75	6.8	3.5	2.36
		27	16	8.1	8.1	2.36	7.9	7.9	2.53	7.6	7.6	2.72	7.2	7.2	2.70	6.3	6.3	2.31
			19	8.5	7.0	2.45	8.3	7.0	2.61	8.0	6.8	2.78	7.5	6.6	2.72	6.6	6.3	2.34
			22	9.0	5.3	2.55	8.7	5.2	2.71	8.3	5.0	2.86	7.8	4.8	2.75	6.8	4.5	2.36
		29	16	8.1	8.1	2.36	7.9	7.9	2.53	7.6	7.6	2.72	7.2	7.2	2.70	6.3	6.3	2.31
			19	8.5	8.1	2.45	8.3	8.0	2.61	8.0	7.8	2.78	7.5	7.5	2.72	6.6	6.6	2.34
			22	9.0	6.4	2.55	8.7	6.3	2.71	8.3	6.0	2.86	7.8	5.9	2.75	6.8	5.6	2.36
		32	16	8.1	8.1	2.36	7.9	7.9	2.53	7.6	7.6	2.72	7.2	7.2	2.70	6.3	6.3	2.31
			19	8.5	8.1	2.45	8.3	8.0	2.61	8.0	7.8	2.78	7.5	7.5	2.72	6.6	6.6	2.34
			22	9.0	6.4	2.55	8.7	6.3	2.71	8.3	6.0	2.86	7.8	5.9	2.75	6.8	5.6	2.36
S-36PT2E5A×3 U-100PE1E5A (U-100PE1E8A)	220V 230V 240V 50Hz 1phase (3phase)	23	16	11.4	10.0	3.12	11.4	10.0	3.36	10.9	9.7	3.57	10.2	9.5	3.71	7.4	7.4	3.03
			19	12.1	7.3	3.26	12.1	7.3	3.50	11.7	7.1	3.72	10.9	6.8	3.87	7.9	5.6	3.17
			22	13.3	4.8	3.37	13.3	4.8	3.62	12.8	4.7	3.85	11.9	4.3	4.01	8.7	3.2	3.28
		25	16	11.8	11.8	3.18	11.8	11.8	3.41	11.3	11.3	3.63	10.5	10.5	3.78	7.7	7.7	3.09
			19	12.6	9.3	3.31	12.6	9.3	3.56	12.1	9.0	3.79	11.2	8.7	3.94	8.2	7.4	3.22
			22	13.8	6.7	3.43	13.8	6.7	3.68	13.2	6.4	3.92	12.3	6.2	4.07	9.0	4.9	3.33
		27	16	12.2	12.2	3.23	12.2	12.2	3.47	11.7	11.7	3.69	10.9	10.9	3.84	8.0	8.0	3.14
			19	13.0	11.4	3.37	13.0	11.4	3.62	12.5	11.0	3.85	11.6	10.8	4.00	8.5	8.5	3.27
			22	14.2	8.6	3.49	14.2	8.6	3.74	13.7	8.5	3.98	12.7	8.1	4.14	9.3	6.8	3.39
		29	16	12.4	12.4	3.24	12.4	12.4	3.48	11.9	11.9	3.70	11.0	11.0	3.85	8.1	8.1	3.15
			19	13.2	13.2	3.38	13.2	13.2	3.63	12.7	12.7	3.86	11.8	11.8	4.01	8.6	8.6	3.28
			22	14.5	10.7	3.49	14.5	10.7	3.75	13.9	10.3	3.99	12.9	10.1	4.15	9.5	8.7	3.39
		32	16	12.5	12.5	3.25	12.5	12.5	3.49	12.1	12.1	3.71	11.2	11.2	3.86	8.2	8.2	3.15
			19	13.4	13.4	3.39	13.4	13.4	3.64	12.9	12.9	3.87	12.0	12.0	4.02	8.8	8.8	3.29
			22	14.7	10.8	3.50	14.7	10.8	3.76	14.1	10.4	4.00	13.1	10.3	4.16	9.6	8.8	3.40
S-50PT2E5A×2 U-100PE1E5A (U-100PE1E8A)	220V 230V 240V 50Hz 1phase (3phase)	23	16	11.4	8.7	3.12	11.4	8.7	3.36	10.9	8.4	3.57	10.2	8.2	3.71	7.4	6.8	3.03
			19	12.1	6.6	3.26	12.1	6.6	3.50	11.7	6.4	3.72	10.9	6.1	3.87	7.9	4.9	3.17
			22	13.3	4.7	3.37	13.3	4.7	3.62	12.8	4.5	3.85	11.9	4.1	4.01	8.7	3.1	3.28
		25	16	11.8	10.3	3.18	11.8	10.3	3.41	11.3	9.9	3.63	10.5	9.7	3.78	7.7	7.7	3.09
			19	12.6	8.1	3.31	12.6	8.1	3.56	12.1	7.8	3.79	11.2	7.5	3.94	8.2	6.3	3.22
			22	13.8	6.2	3.43	13.8	6.2	3.68	13.2	5.9	3.92	12.3	5.6	4.07	9.0	4.4	3.33
		27	16	12.2	11.9	3.23	12.2	11.9	3.47	11.7	11.5	3.69	10.9	10.9	3.84	8.0	8.0	3.14
			19	13.0	9.7	3.37	13.0	9.7	3.62	12.5	9.4	3.85	11.6	9.1	4.00	8.5	7.7	3.27
			22	14.2	7.6	3.49	14.2	7.6	3.74	13.7	7.5	3.98	12.7	7.1	4.14	9.3	5.8	3.39
		29	16	12.4	12.4	3.24	12.4	12.4	3.48	11.9	11.9	3.70	11.0	11.0	3.85	8.1	8.1	3.15
			19	13.2	11.2	3.38	13.2	11.2	3.63	12.7	11.0	3.86	11.8	10.6	4.01	8.6	8.6	3.28
			22	14.5	9.2	3.49	14.5	9.2	3.75	13.9	9.0	3.99	12.9	8.6	4.15	9.5	7.2	3.39
		32	16	12.5	12.5	3.25	12.5	12.5	3.49	12.1	12.1	3.71	11.2	11.2	3.86	8.2	8.2	3.15
			19	13.4	11.3	3.39	13.4	11.3	3.64	12.9	11.1	3.87	12.0	10.8	4.02	8.8	8.8	3.29
			22	14.7	9.3	3.50	14.7	9.3	3.76	14.1	9.1	4.00	13.1	8.8	4.16	9.6	7.3	3.40
S-36PT2E5A×4 U-125PE1E5A (U-125PE1E8A)	220V 230V 240V 50Hz 1phase (3phase)	23	16	12.7	11.6	3.94	12.7	11.6	4.24	12.2	11.2	4.51	11.4	11.0	4.69	8.3	8.3	3.83
			19	13.6	8.5	4.11	13.6	8.5	4.42	13.1	8.3	4.70	12.2	7.9	4.89	8.9	6.6	4.00
			22	14.9	5.4	4.26	14.9	5.4	4.57	14.3	5.2	4.86	13.3	4.8	5.06	9.7	3.6	4.13
		25	16	13.2	13.2	4.01	13.2	13.2	4.31	12.7	12.7	4.58	11.8	11.8	4.77	8.6	8.6	3.90
			19	14.1	10.8	4.18	14.1	10.9	4.49	13.5	10.5	4.78	12.6	10.2	4.97	9.2	8.8	4.06
			22	15.4	7.7	4.33	15.4	7.7	4.65	14.8	7.4	4.95	13.8	7.1	5.14	10.1	5.7	4.20
		27	16	13.6	13.6	4.08	13.6	13.6	4.38	13.1	13.1	4.66	12.2	12.2	4.85	8.9	8.9	3.96
			19	14.6	13.3	4.25	14.6	13.4	4.57	14.0	12.9	4.86	13.0	12.7	5.05	9.5	9.5	4.13
			22	16.0	10.2	4.40	16.0	10.3	4.73	15.3	9.8	5.03	14.3	9.6	5.23	10.4	8.0	4.27
		29	16	13.8	13.8	4.09	13.8	13.8	4.39	13.3	13.3	4.67	12.4	12.4	4.86	9.0	9.0	3.97
			19	14.8	14.8	4.26	14.8	14.8	4.58	14.2	14.2	4.87	13.2	13.2	5.07	9.7	9.7	4.14
			22	16.2	12.5	4.41	16.2	12.6	4.74	15.6	12.2	5.04	14.5	12.0	5.24	10.6	10.2	4.28
		32	16	14.0	14.0	4.10	14.0	14.0	4.40	13.5	13.5	4.68	12.6	12.6	4.87	9.2	9.2	3.98
			19	15.0	15.0	4.27	15.0	15.0	4.59	14.4	14.4	4.88	13.4	13.4	5.08	9.8	9.8	4.15
			22	16.4	12.7	4.42	16.4	12.8	4.75	15.8	12.4	5.05	14.7	12.1	5.25	10.7	10.3	4.29
S-45PT2E5A×3 U-125PE1E5A (U-125PE1E8A)	220V 230V 240V 50Hz 1phase (3phase)	23	16	12.7	10.4	3.94	12.7	10.4	4.24	12.2	10.0	4.51	11.4	9.9	4.69	8.3	8.3	3.83
			19	13.6	7.8	4.11	13.6	7.8	4.42	13.1	7.6	4.70	12.2	7.2	4.89	8.9	5.9	4.00
			22	14.9	5.3	4.26	14.9	5.2	4.57	14.3	4.9	4.86	13.3	4.6	5.06	9.7	3.4	4.13
		25	16	13.2	12.5	4.01	13.2	12.5	4.31	12.7	12.2	4.58	11.8	11.8	4.77	8.6	8.6	3.90
			19	14.1	9.8	4.18	14.1	9.8	4.49	13.5	9.4	4.78	12.6	9.2	4.97	9.2	7.8	4.06
			22	15.4	7.1	4.33	15.4	7.2	4.65	14.8	6.9	4.95	13.8	6.6	5.14	10.1	5.3	4.20
		27	16	13.6	13.6	4.08	13.6	13.6	4.38	13.1	13.1	4.66	12.2	12.2	4.85	8.9	8.9	3.96
			19	14.6	11.9	4.25	14.6	12.0	4.57	14.0	11.5	4.86	13.0	11.2	5.05	9.5	9.5	4.13
			22	16.0	9.2	4.40	16.0	9.3	4.73	15.3	8.9	5.03	14.3	8.7	5.23	10.4	7.1	4.27
		29	16	13.8	13.8	4.09	13.8	13.8	4.39	13.3	13.3	4.67	12.4	12.4	4.86	9.0	9.0	3.97
			19	14.8	13.8	4.26	14.8	13.9	4.58	14.2	13.4	4.87	13.2	13.2	5.07	9.7	9.7	4.14
			22	16.2	11.2	4.41	16.2	11.2	4.74	15.6	10.9	5.04	14.5	10.5	5.24	10.6	9.0	4.28
		32	16	14.0	14.0	4.10	14.0	14.0	4.40	13.5	13.5	4.68	12.6	12.6	4.87	9.2	9.2	3.98
			19	15.0	14.0	4.27	15.0	14.1	4.59	14.4	13.6	4.88	13.4	13.4	5.08	9.8	9.8	4.15
			22	16.4	11.3	4.42	16.4	11.3	4.75	15.8	11.0	5.05	14.7	10.7	5.25	10.7	9.1	4.29

1-13. Capacity Table

1. Cooling Capacity Performance Data

□Combination of Multiple Unit

Ceiling Type

TC :Cooling Capacity
SHC :Sensible Heat Capacity
IPT :Cooling Power Consumption

unit : kW

Model	Power Source	Ambient Return Air		Outdoor air intake temp(℃ D.B.)														
				25℃			30℃			35℃			40℃			46℃		
		DB	WB	TC	SHC	IPT	TC	SHC	IPT	TC	SHC	IPT	TC	SHC	IPT	TC	SHC	IPT
S-60PT2E5A×2 U-125PE1E5A (U-125PE1E8A)	220V 230V 240V 50Hz 1phase (3phase)	23	16	12.7	9.9	3.94	12.7	9.9	4.24	12.2	9.5	4.51	11.4	9.4	4.69	8.3	7.8	3.83
			19	13.6	7.5	4.11	13.6	7.5	4.42	13.1	7.3	4.70	12.2	6.9	4.89	8.9	5.5	4.00
			22	14.9	5.2	4.26	14.9	5.1	4.57	14.3	5.0	4.86	13.3	4.6	5.06	9.7	3.4	4.13
		25	16	13.2	11.8	4.01	13.2	11.8	4.31	12.7	11.4	4.58	11.8	11.2	4.77	8.6	8.6	3.90
			19	14.1	9.3	4.18	14.1	9.4	4.49	13.5	9.0	4.78	12.6	8.7	4.97	9.2	7.3	4.06
			22	15.4	6.9	4.33	15.4	7.0	4.65	14.8	6.7	4.95	13.8	6.4	5.14	10.1	5.0	4.20
		27	16	13.6	13.6	4.08	13.6	13.6	4.38	13.1	13.1	4.66	12.2	12.2	4.85	8.9	8.9	3.96
			19	14.6	11.2	4.25	14.6	11.2	4.57	14.0	10.8	4.86	13.0	10.5	5.05	9.5	9.0	4.13
			22	16.0	8.9	4.40	16.0	8.8	4.73	15.3	8.4	5.03	14.3	8.2	5.23	10.4	6.6	4.27
		29	16	13.8	13.8	4.09	13.8	13.8	4.39	13.3	13.3	4.67	12.4	12.4	4.86	9.0	9.0	3.97
			19	14.8	13.0	4.26	14.8	13.1	4.58	14.2	12.6	4.87	13.2	12.4	5.07	9.7	9.7	4.14
			22	16.2	10.6	4.41	16.2	10.5	4.74	15.6	10.3	5.04	14.5	10.1	5.24	10.6	8.4	4.28
		32	16	14.0	14.0	4.10	14.0	14.0	4.40	13.5	13.5	4.68	12.6	12.6	4.87	9.2	9.2	3.98
			19	15.0	13.1	4.27	15.0	13.2	4.59	14.4	12.8	4.88	13.4	12.6	5.08	9.8	9.8	4.15
			22	16.4	10.7	4.42	16.4	10.7	4.75	15.8	10.4	5.05	14.7	10.2	5.25	10.7	8.5	4.29
S-50PT2E5A×3 U-140PE1E5A (U-140PE1E8A)	220V 230V 240V 50Hz 1phase (3phase)	23	16	13.6	10.6	4.58	13.6	10.6	4.93	13.1	10.3	5.24	12.2	10.0	5.45	8.9	8.5	4.45
			19	14.6	8.0	4.78	14.6	8.1	5.14	14.0	7.8	5.47	13.0	7.4	5.68	9.5	5.9	4.65
			22	16.0	5.6	4.95	16.0	5.6	5.32	15.4	5.4	5.65	14.3	4.9	5.88	10.4	3.6	4.81
		25	16	14.1	12.5	4.66	14.1	12.5	5.01	13.6	12.2	5.33	12.6	11.9	5.54	9.2	9.2	4.53
			19	15.1	9.9	4.86	15.1	10.0	5.22	14.5	9.6	5.56	13.5	9.3	5.78	9.9	7.8	4.72
			22	16.5	7.4	5.03	16.5	7.5	5.40	15.9	7.2	5.75	14.8	6.8	5.98	10.8	5.3	4.89
		27	16	14.6	14.6	4.74	14.6	14.6	5.09	14.0	14.0	5.42	13.1	13.1	5.63	9.5	9.5	4.60
			19	15.6	11.9	4.94	15.6	12.0	5.31	15.0	11.6	5.65	14.0	11.4	5.88	10.2	9.7	4.80
			22	17.1	9.4	5.11	17.1	9.4	5.49	16.4	9.1	5.85	15.3	8.8	6.08	11.2	7.2	4.97
		29	16	14.8	14.8	4.75	14.8	14.8	5.10	14.3	14.3	5.43	13.3	13.3	5.65	9.7	9.7	4.62
			19	15.8	13.8	4.96	15.8	13.9	5.32	15.2	13.4	5.66	14.2	13.3	5.89	10.4	10.4	4.81
			22	17.3	11.3	5.13	17.3	11.3	5.51	16.7	10.9	5.86	15.5	10.6	6.09	11.3	8.9	4.98
		32	16	15.0	15.0	4.76	15.0	15.0	5.12	14.5	14.5	5.44	13.4	13.4	5.66	9.8	9.8	4.63
			19	16.1	14.0	4.97	16.1	14.1	5.34	15.4	13.6	5.68	14.4	13.4	5.91	10.5	10.5	4.83
			22	17.6	11.5	5.14	17.6	11.5	5.52	16.9	11.0	5.87	15.7	10.7	6.11	11.5	9.1	4.99
S-71PT2E5A×2 U-140PE1E5A (U-140PE1E8A)	220V 230V 240V 50Hz 1phase (3phase)	23	16	13.6	10.3	4.58	13.6	10.4	4.93	13.1	10.1	5.24	12.2	9.7	5.45	8.9	8.2	4.45
			19	14.6	8.1	4.78	14.6	8.0	5.14	14.0	7.7	5.47	13.0	7.3	5.68	9.5	5.8	4.65
			22	16.0	5.7	4.95	16.0	5.7	5.32	15.4	5.4	5.65	14.3	5.0	5.88	10.4	3.7	4.81
		25	16	14.1	12.2	4.66	14.1	12.2	5.01	13.6	11.9	5.33	12.6	11.6	5.54	9.2	9.2	4.53
			19	15.1	9.8	4.86	15.1	9.8	5.22	14.5	9.5	5.56	13.5	9.1	5.78	9.9	7.6	4.72
			22	16.5	7.4	5.03	16.5	7.5	5.40	15.9	7.2	5.75	14.8	6.8	5.98	10.8	5.3	4.89
		27	16	14.6	14.2	4.74	14.6	14.2	5.09	14.0	13.8	5.42	13.1	13.1	5.63	9.5	9.5	4.60
			19	15.6	11.7	4.94	15.6	11.6	5.31	15.0	11.2	5.65	14.0	11.1	5.88	10.2	9.3	4.80
			22	17.1	9.2	5.11	17.1	9.3	5.49	16.4	8.9	5.85	15.3	8.6	6.08	11.2	7.0	4.97
		29	16	14.8	14.8	4.75	14.8	14.8	5.10	14.3	14.3	5.43	13.3	13.3	5.65	9.7	9.7	4.62
			19	15.8	13.3	4.96	15.8	13.4	5.32	15.2	13.0	5.66	14.2	12.8	5.89	10.4	10.4	4.81
			22	17.3	11.0	5.13	17.3	11.0	5.51	16.7	10.7	5.86	15.5	10.3	6.09	11.3	8.5	4.98
		32	16	15.0	15.0	4.76	15.0	15.0	5.12	14.5	14.5	5.44	13.4	13.4	5.66	9.8	9.8	4.63
			19	16.1	13.6	4.97	16.1	13.7	5.34	15.4	13.1	5.68	14.4	12.9	5.91	10.5	10.5	4.83
			22	17.6	11.2	5.14	17.6	11.2	5.52	16.9	10.9	5.87	15.7	10.4	6.11	11.5	8.7	4.99

1-13. Capacity Table

1. Cooling Capacity Performance Data

□Combination of Single Unit

Wall Mounted Type

TC :Cooling Capacity
SHC :Sensible Heat Capacity
IPT :Cooling Power Consumption

unit : kW

Model	Power Source	Ambient Return Air		Outdoor air intake temp(□C D.B.)														
				25□C			30□C			35□C			40□C			46□C		
		DB	WB	TC	SHC	IPT	TC	SHC	IPT	TC	SHC	IPT	TC	SHC	IPT	TC	SHC	IPT
S-50PK1E5A U-50PE1E5	220V 230V 240V 50Hz 1 phase	23	16	5.9	4.2	1.81	5.6	4.1	1.96	5.2	3.9	2.16	5.0	3.8	2.40	3.9	3.3	1.57
			19	6.4	3.3	1.88	6.0	3.2	2.04	5.6	3.0	2.25	5.4	2.9	2.50	4.2	2.4	1.64
			22	7.0	2.5	1.96	6.5	2.3	2.13	6.1	2.1	2.34	5.9	2.1	2.60	4.6	1.6	1.70
		25	16	5.9	4.8	1.81	5.6	4.6	1.96	5.2	4.4	2.16	5.0	4.3	2.40	3.9	3.8	1.57
			19	6.4	3.9	1.88	6.0	3.7	2.04	5.6	3.5	2.25	5.4	3.4	2.50	4.2	3.0	1.64
			22	7.0	3.0	1.96	6.5	2.8	2.13	6.1	2.7	2.34	5.9	2.6	2.60	4.6	2.1	1.70
		27	16	5.9	5.3	1.81	5.6	5.2	1.96	5.2	5.0	2.16	5.0	4.9	2.40	3.9	3.9	1.57
			19	6.4	4.4	1.88	6.0	4.2	2.04	5.6	4.1	2.25	5.4	4.0	2.50	4.2	3.5	1.64
			22	7.0	3.5	1.96	6.5	3.3	2.13	6.1	3.2	2.34	5.9	3.1	2.60	4.6	2.6	1.70
		29	16	5.9	5.8	1.81	5.6	5.6	1.96	5.2	5.2	2.16	5.0	5.0	2.40	3.9	3.9	1.57
			19	6.4	4.9	1.88	6.0	4.8	2.04	5.6	4.6	2.25	5.4	4.5	2.50	4.2	4.0	1.64
			22	7.0	4.1	1.96	6.5	3.9	2.13	6.1	3.7	2.34	5.9	3.6	2.60	4.6	3.2	1.70
		32	16	5.9	5.8	1.81	5.6	5.6	1.96	5.2	5.2	2.16	5.0	5.0	2.40	3.9	3.9	1.57
			19	6.4	4.9	1.88	6.0	4.8	2.04	5.6	4.6	2.25	5.4	4.5	2.50	4.2	4.0	1.64
			22	7.0	4.1	1.96	6.5	3.9	2.13	6.1	3.7	2.34	5.9	3.6	2.60	4.6	3.2	1.70
S-60PK1E5A U-60PE1E5A	220V 230V 240V 50Hz 1 phase	23	16	7.2	5.6	1.70	7.0	5.5	1.82	6.8	5.4	1.96	6.6	5.3	1.97	6.2	5.1	1.84
			19	7.5	4.1	1.76	7.3	4.0	1.88	7.1	4.0	2.00	6.8	3.9	1.99	6.5	3.8	1.86
			22	7.9	2.7	1.84	7.7	2.7	1.95	7.4	2.6	2.06	7.1	2.5	2.01	6.7	2.4	1.88
		25	16	7.2	6.5	1.70	7.0	6.3	1.82	6.8	6.2	1.96	6.6	6.1	1.97	6.2	6.0	1.84
			19	7.5	4.9	1.76	7.3	4.8	1.88	7.1	4.7	2.00	6.8	4.7	1.99	6.5	4.5	1.86
			22	7.9	3.5	1.84	7.7	3.4	1.95	7.4	3.3	2.06	7.1	3.3	2.01	6.7	3.1	1.88
		27	16	7.2	7.2	1.70	7.0	7.0	1.82	6.8	6.8	1.96	6.6	6.6	1.97	6.2	6.2	1.84
			19	7.5	5.7	1.76	7.3	5.7	1.88	7.1	5.6	2.00	6.8	5.4	1.99	6.5	5.3	1.86
			22	7.9	4.4	1.84	7.7	4.3	1.95	7.4	4.2	2.06	7.1	4.0	2.01	6.7	3.9	1.88
		29	16	7.2	7.2	1.70	7.0	7.0	1.82	6.8	6.8	1.96	6.6	6.6	1.97	6.2	6.2	1.84
			19	7.5	6.6	1.76	7.3	6.5	1.88	7.1	6.4	2.00	6.8	6.2	1.99	6.5	6.1	1.86
			22	7.9	5.2	1.84	7.7	5.1	1.95	7.4	5.0	2.06	7.1	4.9	2.01	6.7	4.8	1.88
		32	16	7.2	7.2	1.70	7.0	7.0	1.82	6.8	6.8	1.96	6.6	6.6	1.97	6.2	6.2	1.84
			19	7.5	6.6	1.76	7.3	6.5	1.88	7.1	6.4	2.00	6.8	6.2	1.99	6.5	6.1	1.86
			22	7.9	5.2	1.84	7.7	5.1	1.95	7.4	5.0	2.06	7.1	4.9	2.01	6.7	4.8	1.88
S-71PK1E5A U-71PE1E5A (U-71PE1E8A)	220V 230V 240V 50Hz 1 phase (3 phase)	23	16	8.1	6.0	2.25	7.9	5.9	2.41	7.6	5.7	2.59	7.2	5.5	2.57	6.3	5.1	2.20
			19	8.5	4.5	2.33	8.3	4.4	2.49	8.0	4.3	2.65	7.5	4.0	2.60	6.6	3.8	2.23
			22	9.0	3.2	2.44	8.7	3.1	2.58	8.3	2.9	2.73	7.8	2.7	2.62	6.8	2.4	2.25
		25	16	8.1	6.8	2.25	7.9	6.7	2.41	7.6	6.5	2.59	7.2	6.3	2.57	6.3	5.9	2.20
			19	8.5	5.3	2.33	8.3	5.2	2.49	8.0	5.1	2.65	7.5	4.8	2.60	6.6	4.6	2.23
			22	9.0	3.9	2.44	8.7	3.8	2.58	8.3	3.7	2.73	7.8	3.5	2.62	6.8	3.2	2.25
		27	16	8.1	7.5	2.25	7.9	7.4	2.41	7.6	7.3	2.59	7.2	7.1	2.57	6.3	6.3	2.20
			19	8.5	6.1	2.33	8.3	6.0	2.49	8.0	5.9	2.65	7.5	5.6	2.60	6.6	5.3	2.23
			22	9.0	4.7	2.44	8.7	4.5	2.58	8.3	4.4	2.73	7.8	4.3	2.62	6.8	3.9	2.25
		29	16	8.1	8.1	2.25	7.9	7.9	2.41	7.6	7.6	2.59	7.2	7.2	2.57	6.3	6.3	2.20
			19	8.5	6.9	2.33	8.3	6.8	2.49	8.0	6.6	2.65	7.5	6.4	2.60	6.6	6.0	2.23
			22	9.0	5.5	2.44	8.7	5.3	2.58	8.3	5.2	2.73	7.8	5.0	2.62	6.8	4.6	2.25
		32	16	8.1	8.1	2.25	7.9	7.9	2.41	7.6	7.6	2.59	7.2	7.2	2.57	6.3	6.3	2.20
			19	8.5	6.9	2.33	8.3	6.8	2.49	8.0	6.6	2.65	7.5	6.4	2.60	6.6	6.0	2.23
			22	9.0	5.5	2.44	8.7	5.3	2.58	8.3	5.2	2.73	7.8	5.0	2.62	6.8	4.6	2.25
S-100PK1E5A U-100PE1E5A (U-100PE1E8A)	220V 230V 240V 50Hz 1 phase (3 phase)	23	16	9.6	6.5	2.76	9.6	6.5	2.96	9.2	6.3	3.15	8.5	5.9	3.28	6.2	4.8	2.68
			19	10.2	5.1	2.88	10.2	5.1	3.09	9.8	4.9	3.29	9.1	4.6	3.42	6.7	3.6	2.80
			22	11.2	4.0	2.98	11.2	4.0	3.20	10.7	3.8	3.40	10.0	3.5	3.54	7.3	2.5	2.89
		25	16	9.9	7.4	2.81	9.9	7.4	3.01	9.5	7.1	3.21	8.8	6.8	3.33	6.5	5.6	2.73
			19	10.6	6.0	2.93	10.6	6.0	3.14	10.2	5.9	3.34	9.4	5.5	3.48	6.9	4.4	2.84
			22	11.6	4.8	3.03	11.6	4.8	3.25	11.1	4.6	3.46	10.3	4.3	3.60	7.6	3.3	2.94
		27	16	10.2	8.2	2.85	10.2	8.2	3.06	9.8	8.0	3.26	9.1	7.7	3.39	6.7	6.5	2.77
			19	10.9	6.9	2.98	10.9	6.9	3.20	10.5	6.7	3.40	9.8	6.4	3.54	7.1	5.2	2.89
			22	12.0	5.7	3.08	12.0	5.7	3.31	11.5	5.5	3.52	10.7	5.2	3.66	7.8	4.1	2.99
		29	16	10.4	9.1	2.86	10.4	9.1	3.07	10.0	8.9	3.27	9.3	8.5	3.40	6.8	6.8	2.78
			19	11.1	7.7	2.98	11.1	7.7	3.20	10.7	7.6	3.41	9.9	7.2	3.54	7.2	6.0	2.90
			22	12.1	6.5	3.09	12.1	6.5	3.31	11.7	6.3	3.53	10.9	6.0	3.67	7.9	4.8	3.00
		32	16	10.5	9.2	2.87	10.5	9.2	3.08	10.1	9.0	3.28	9.4	8.6	3.41	6.9	6.9	2.78
			19	11.2	7.8	2.99	11.2	7.8	3.21	10.8	7.6	3.42	10.1	7.3	3.55	7.4	6.0	2.90
			22	12.3	6.6	3.09	12.3	6.6	3.32	11.8	6.4	3.53	11.0	6.0	3.68	8.1	4.9	3.00

1-13. Capacity Table

1. Cooling Capacity Performance Data

□Combination of Multiple Unit

Wall Mounted Type

TC :Cooling Capacity
SHC :Sensible Heat Capacity
IPT :Cooling Power Consumption

unit : kW

Model	Power Source	Ambient Return Air		Outdoor air intake temp(□C D.B.)														
				25□C			30□C			35□C			40□C			46□C		
		DB	WB	TC	SHC	IPT	TC	SHC	IPT	TC	SHC	IPT	TC	SHC	IPT	TC	SHC	IPT
S-36PK1E5A×2 U-71PE1E5A (U-71PE1E8A)	220V 230V 240V 50Hz 1 phase (3 phase)	23	16	8.1	6.4	2.25	7.9	6.3	2.41	7.6	6.1	2.59	7.2	6.0	2.57	6.3	5.5	2.20
			19	8.5	4.8	2.33	8.3	4.7	2.49	8.0	4.5	2.65	7.5	4.4	2.60	6.6	4.0	2.23
			22	9.0	3.2	2.44	8.7	3.1	2.58	8.3	2.9	2.73	7.8	2.7	2.62	6.8	2.4	2.25
		25	16	8.1	7.3	2.25	7.9	7.2	2.41	7.6	7.1	2.59	7.2	6.9	2.57	6.3	6.3	2.20
			19	8.5	5.7	2.33	8.3	5.6	2.49	8.0	5.4	2.65	7.5	5.3	2.60	6.6	4.9	2.23
			22	9.0	4.1	2.44	8.7	4.0	2.58	8.3	3.8	2.73	7.8	3.6	2.62	6.8	3.3	2.25
		27	16	8.1	8.1	2.25	7.9	7.9	2.41	7.6	7.6	2.59	7.2	7.2	2.57	6.3	6.3	2.20
			19	8.5	6.6	2.33	8.3	6.6	2.49	8.0	6.4	2.65	7.5	6.2	2.60	6.6	5.9	2.23
			22	9.0	5.0	2.44	8.7	4.9	2.58	8.3	4.7	2.73	7.8	4.5	2.62	6.8	4.2	2.25
		29	16	8.1	8.1	2.25	7.9	7.9	2.41	7.6	7.6	2.59	7.2	7.2	2.57	6.3	6.3	2.20
			19	8.5	7.6	2.33	8.3	7.5	2.49	8.0	7.3	2.65	7.5	7.1	2.60	6.6	6.6	2.23
			22	9.0	6.0	2.44	8.7	5.8	2.58	8.3	5.6	2.73	7.8	5.4	2.62	6.8	5.1	2.25
		32	16	8.1	8.1	2.25	7.9	7.9	2.41	7.6	7.6	2.59	7.2	7.2	2.57	6.3	6.3	2.20
			19	8.5	7.6	2.33	8.3	7.5	2.49	8.0	7.3	2.65	7.5	7.1	2.60	6.6	6.6	2.23
			22	9.0	6.0	2.44	8.7	5.8	2.58	8.3	5.6	2.73	7.8	5.4	2.62	6.8	5.1	2.25
S-36PK1E5A×3 U-100PE1E5A (U-100PE1E8A)	220V 230V 240V 50Hz 1 phase (3 phase)	23	16	11.4	9.3	3.00	11.4	9.3	3.23	10.9	9.0	3.43	10.2	8.9	3.57	7.4	7.4	2.92
			19	12.1	6.9	3.13	12.1	6.9	3.36	11.7	6.8	3.58	10.9	6.5	3.72	7.9	5.2	3.04
			22	13.3	4.6	3.24	13.3	4.6	3.48	12.8	4.5	3.70	11.9	4.1	3.85	8.7	3.1	3.15
		25	16	11.8	11.2	3.05	11.8	11.2	3.28	11.3	10.8	3.49	10.5	10.5	3.63	7.7	7.7	2.97
			19	12.6	8.8	3.18	12.6	8.8	3.42	12.1	8.5	3.64	11.2	8.2	3.79	8.2	7.0	3.09
			22	13.8	6.3	3.29	13.8	6.3	3.54	13.2	6.2	3.77	12.3	5.8	3.92	9.0	4.7	3.20
		27	16	12.2	12.2	3.10	12.2	12.2	3.33	11.7	11.7	3.55	10.9	10.9	3.69	8.0	8.0	3.02
			19	13.0	10.6	3.24	13.0	10.6	3.48	12.5	10.4	3.70	11.6	10.1	3.85	8.5	8.5	3.15
			22	14.2	8.2	3.35	14.2	8.2	3.60	13.7	8.0	3.83	12.7	7.8	3.98	9.3	6.4	3.25
		29	16	12.4	12.4	3.11	12.4	12.4	3.34	11.9	11.9	3.56	11.0	11.0	3.70	8.1	8.1	3.02
			19	13.2	12.4	3.25	13.2	12.4	3.49	12.7	12.1	3.71	11.8	11.8	3.86	8.6	8.6	3.15
			22	14.5	10.0	3.36	14.5	10.0	3.61	13.9	9.7	3.84	12.9	9.5	3.99	9.5	8.1	3.26
		32	16	12.5	12.5	3.12	12.5	12.5	3.35	12.1	12.1	3.56	11.2	11.2	3.71	8.2	8.2	3.03
			19	13.4	12.6	3.25	13.4	12.6	3.50	12.9	12.3	3.72	12.0	12.0	3.87	8.8	8.8	3.16
			22	14.7	10.2	3.37	14.7	10.2	3.62	14.1	9.8	3.85	13.1	9.7	4.00	9.6	8.2	3.27
S-50PK1E5A×2 U-100PE1E5A (U-100PE1E8A)	220V 230V 240V 50Hz 1 phase (3 phase)	23	16	11.4	8.7	3.00	11.4	8.7	3.23	10.9	8.4	3.43	10.2	8.2	3.57	7.4	6.9	2.92
			19	12.1	6.6	3.13	12.1	6.6	3.36	11.7	6.4	3.58	10.9	6.2	3.72	7.9	4.9	3.04
			22	13.3	4.6	3.24	13.3	4.6	3.48	12.8	4.5	3.70	11.9	4.1	3.85	8.7	3.1	3.15
		25	16	11.8	10.4	3.05	11.8	10.4	3.28	11.3	10.0	3.49	10.5	9.8	3.63	7.7	7.7	2.97
			19	12.6	8.2	3.18	12.6	8.2	3.42	12.1	7.9	3.64	11.2	7.7	3.79	8.2	6.4	3.09
			22	13.8	6.2	3.29	13.8	6.2	3.54	13.2	5.9	3.77	12.3	5.6	3.92	9.0	4.4	3.20
		27	16	12.2	12.0	3.10	12.2	12.0	3.33	11.7	11.6	3.55	10.9	10.9	3.69	8.0	8.0	3.02
			19	13.0	9.8	3.24	13.0	9.8	3.48	12.5	9.5	3.70	11.6	9.3	3.85	8.5	7.9	3.15
			22	14.2	7.7	3.35	14.2	7.7	3.60	13.7	7.4	3.83	12.7	7.2	3.98	9.3	5.9	3.25
		29	16	12.4	12.4	3.11	12.4	12.4	3.34	11.9	11.9	3.56	11.0	11.0	3.70	8.1	8.1	3.02
			19	13.2	11.4	3.25	13.2	11.4	3.49	12.7	11.0	3.71	11.8	10.9	3.86	8.6	8.6	3.15
			22	14.5	9.4	3.36	14.5	9.4	3.61	13.9	9.0	3.84	12.9	8.7	3.99	9.5	7.4	3.26
		32	16	12.5	12.5	3.12	12.5	12.5	3.35	12.1	12.1	3.56	11.2	11.2	3.71	8.2	8.2	3.03
			19	13.4	11.6	3.25	13.4	11.6	3.50	12.9	11.2	3.72	12.0	11.1	3.87	8.8	8.8	3.16
			22	14.7	9.5	3.37	14.7	9.5	3.62	14.1	9.1	3.85	13.1	8.8	4.00	9.6	7.5	3.27
S-36PK1E5A×4 U-125PE1E5A (U-125PE1E8A)	220V 230V 240V 50Hz 1 phase (3 phase)	23	16	12.7	10.6	3.73	12.7	10.7	4.01	12.2	10.5	4.27	11.4	10.2	4.44	8.3	8.3	3.63
			19	13.6	8.0	3.89	13.6	7.9	4.18	13.1	7.8	4.45	12.2	7.4	4.63	8.9	6.1	3.78
			22	14.9	5.2	4.03	14.9	5.2	4.33	14.3	5.0	4.60	13.3	4.7	4.79	9.7	3.5	3.91
		25	16	13.2	12.9	3.80	13.2	13.0	4.08	12.7	12.6	4.34	11.8	11.8	4.51	8.6	8.6	3.69
			19	14.1	10.0	3.96	14.1	10.1	4.25	13.5	9.7	4.52	12.6	9.5	4.71	9.2	8.1	3.85
			22	15.4	7.2	4.10	15.4	7.3	4.40	14.8	7.0	4.68	13.8	6.7	4.87	10.1	5.4	3.98
		27	16	13.6	13.6	3.86	13.6	13.6	4.15	13.1	13.1	4.41	12.2	12.2	4.59	8.9	8.9	3.75
			19	14.6	12.3	4.03	14.6	12.4	4.32	14.0	11.9	4.60	13.0	11.7	4.78	9.5	9.5	3.91
			22	16.0	9.4	4.16	16.0	9.5	4.47	15.3	9.1	4.76	14.3	8.9	4.95	10.4	7.4	4.05
		29	16	13.8	13.8	3.87	13.8	13.8	4.16	13.3	13.3	4.42	12.4	12.4	4.60	9.0	9.0	3.76
			19	14.8	14.3	4.03	14.8	14.5	4.33	14.2	14.0	4.61	13.2	13.2	4.80	9.7	9.7	3.92
			22	16.2	11.6	4.17	16.2	11.6	4.48	15.6	11.3	4.77	14.5	11.1	4.96	10.6	9.4	4.06
		32	16	14.0	14.0	3.88	14.0	14.0	4.17	13.5	13.5	4.43	12.6	12.6	4.61	9.2	9.2	3.77
			19	15.0	14.5	4.04	15.0	14.6	4.35	14.4	14.2	4.62	13.4	13.4	4.81	9.8	9.8	3.93
			22	16.4	11.7	4.18	16.4	11.7	4.50	15.8	11.5	4.78	14.7	11.2	4.97	10.7	9.5	4.07
S-45PK1E5A×3 U-125PE1E5A (U-125PE1E8A)	220V 230V 240V 50Hz 1 phase (3 phase)	23	16	12.7	9.7	3.73	12.7	9.7	4.01	12.2	9.6	4.27	11.4	9.2	4.44	8.3	7.8	3.63
			19	13.6	7.3	3.89	13.6	7.4	4.18	13.1	7.1	4.45	12.2	6.8	4.63	8.9	5.4	3.78
			22	14.9	5.1	4.03	14.9	5.0	4.33	14.3	4.9	4.60	13.3	4.5	4.79	9.7	3.3	3.91
		25	16	13.2	11.6	3.80	13.2	11.6	4.08	12.7	11.2	4.34	11.8	11.0	4.51	8.6	8.6	3.69
			19	14.1	9.1	3.96	14.1	9.2	4.25	13.5	8.9	4.52	12.6	8.6	4.71	9.2	7.1	3.85
			22	15.4	6.8	4.10	15.4	6.8	4.40	14.8	6.6	4.68	13.8	6.3	4.87	10.1	4.9	3.98
		27	16	13.6	13.4	3.86	13.6	13.5	4.15	13.1	13.1	4.41	12.2	12.2	4.59	8.9	8.9	3.75
			19	14.6	11.1	4.03	14.6	11.0	4.32	14.0	10.6	4.60	13.0	10.4	4.78	9.5	8.9	3.91
			22	16.0	8.7	4.16	16.0	8.7	4.47	15.3	8.3	4.76	14.3	8.1	4.95	10.4	6.6	4.05
		29	16	13.8	13.8	3.87	13.8	13.8	4.16	13.3	13.3	4.42	12.4	12.4	4.60	9.0	9.0	3.76
			19	14.8	12.7	4.03	14.8	12.8	4.33	14.2	12.4	4.61	13.2	12.1	4.80	9.7	9.7	3.92
			22	16.2	10.4	4.17	16.2	10.5	4.48	15.6	10.1	4.77	14.5	9.9	4.96	10.6	8.3	4.06
		32	16	14.0	14.0	3.88	14.0	14.0	4.17	13.5	13.5	4.43	12.6	12.6	4.61	9.2	9.2	3.77
			19	15.0	12.9	4.04	15.0	13.0	4.35	14.4	12.6	4.62	13.4	12.3	4.81	9.8	9.8	3.93
			22	16.4	10.5	4.18	16.4	10.6	4.50	15.8	10.3	4.78	14.7	10.0	4.97	10.7	8.3	4.07

1-13. Capacity Table

1. Cooling Capacity Performance Data

□Combination of Multiple Unit

Wall Mounted Type

TC :Cooling Capacity
SHC :Sensible Heat Capacity
IPT :Cooling Power Consumption

unit : kW

Model	Power Source	Ambient Return Air		Outdoor air intake temp(℃ D.B.)														
				25℃			30℃			35℃			40℃			46℃		
		DB	WB	TC	SHC	IPT	TC	SHC	IPT	TC	SHC	IPT	TC	SHC	IPT	TC	SHC	IPT
S-60PK1E5A×2 U-125PE1E5A (U-125PE1E8A)	220V 230V 240V 50Hz 1 phase (3 phase)	23	16	12.7	9.8	3.73	12.7	9.9	4.01	12.2	9.6	4.27	11.4	9.3	4.44	8.3	7.9	3.63
			19	13.6	7.4	3.89	13.6	7.5	4.18	13.1	7.2	4.45	12.2	6.9	4.63	8.9	5.5	3.78
			22	14.9	5.2	4.03	14.9	5.2	4.33	14.3	5.0	4.60	13.3	4.6	4.79	9.7	3.4	3.91
		25	16	13.2	11.7	3.80	13.2	11.7	4.08	12.7	11.4	4.34	11.8	11.1	4.51	8.6	8.6	3.69
			19	14.1	9.3	3.96	14.1	9.3	4.25	13.5	9.0	4.52	12.6	8.7	4.71	9.2	7.3	3.85
			22	15.4	6.9	4.10	15.4	6.9	4.40	14.8	6.7	4.68	13.8	6.4	4.87	10.1	5.0	3.98
		27	16	13.6	13.6	3.86	13.6	13.6	4.15	13.1	13.1	4.41	12.2	12.2	4.59	8.9	8.9	3.75
			19	14.6	11.2	4.03	14.6	11.2	4.32	14.0	10.8	4.60	13.0	10.5	4.78	9.5	9.1	3.91
			22	16.0	8.8	4.16	16.0	8.8	4.47	15.3	8.4	4.76	14.3	8.2	4.95	10.4	6.7	4.05
		29	16	13.8	13.8	3.87	13.8	13.8	4.16	13.3	13.3	4.42	12.4	12.4	4.60	9.0	9.0	3.76
			19	14.8	12.8	4.03	14.8	12.9	4.33	14.2	12.5	4.61	13.2	12.3	4.80	9.7	9.7	3.92
			22	16.2	10.5	4.17	16.2	10.6	4.48	15.6	10.2	4.77	14.5	10.0	4.96	10.6	8.4	4.06
		32	16	14.0	14.0	3.88	14.0	14.0	4.17	13.5	13.5	4.43	12.6	12.6	4.61	9.2	9.2	3.77
			19	15.0	13.0	4.04	15.0	13.1	4.35	14.4	12.7	4.62	13.4	12.5	4.81	9.8	9.8	3.93
			22	16.4	10.6	4.18	16.4	10.7	4.50	15.8	10.4	4.78	14.7	10.1	4.97	10.7	8.5	4.07
S-50PK1E5A×3 U-140PE1E5A (U-140PE1E8A)	220V 230V 240V 50Hz 1 phase (3 phase)	23	16	14.1	11.0	4.87	14.1	11.1	5.23	13.6	10.8	5.56	12.6	10.4	5.79	9.2	8.9	4.73
			19	15.1	8.4	5.08	15.1	8.4	5.46	14.5	8.1	5.80	13.5	7.8	6.04	9.8	6.3	4.93
			22	16.5	5.7	5.25	16.5	5.8	5.64	15.9	5.5	6.00	14.8	5.1	6.25	10.8	3.8	5.10
		25	16	14.6	13.2	4.95	14.6	13.2	5.32	14.0	12.7	5.66	13.1	12.6	5.88	9.5	9.5	4.81
			19	15.6	10.5	5.16	15.6	10.4	5.55	15.0	10.1	5.90	13.9	9.8	6.14	10.2	8.3	5.02
			22	17.1	7.8	5.34	17.1	7.8	5.74	16.4	7.5	6.11	15.3	7.1	6.35	11.2	5.6	5.19
		27	16	15.1	15.1	5.03	15.1	15.1	5.41	14.5	14.5	5.75	13.5	13.5	5.98	9.9	9.9	4.89
			19	16.1	12.5	5.25	16.1	12.6	5.64	15.5	12.2	6.00	14.4	11.9	6.24	10.5	10.2	5.10
			22	17.7	9.9	5.43	17.7	9.9	5.83	17.0	9.5	6.21	15.8	9.3	6.46	11.5	7.6	5.28
		29	16	15.3	15.3	5.05	15.3	15.3	5.42	14.7	14.7	5.77	13.7	13.7	6.00	10.0	10.0	4.90
			19	16.4	14.6	5.26	16.4	14.7	5.65	15.7	14.1	6.01	14.6	13.9	6.26	10.7	10.7	5.11
			22	17.9	11.8	5.44	17.9	11.9	5.85	17.2	11.5	6.22	16.0	11.2	6.47	11.7	9.5	5.29
		32	16	15.5	15.5	5.06	15.5	15.5	5.43	14.9	14.9	5.78	13.9	13.9	6.01	10.2	10.2	4.91
			19	16.6	14.7	5.28	16.6	14.8	5.67	16.0	14.4	6.03	14.8	14.1	6.27	10.9	10.9	5.13
			22	18.2	12.0	5.46	18.2	12.1	5.86	17.5	11.7	6.24	16.3	11.4	6.49	11.9	9.7	5.30
S-71PK1E5A×2 U-140PE1E5A (U-140PE1E8A)	220V 230V 240V 50Hz 1 phase (3 phase)	23	16	14.1	10.4	4.87	14.1	10.4	5.23	13.6	10.1	5.56	12.6	9.9	5.79	9.2	8.3	4.73
			19	15.1	8.1	5.08	15.1	8.1	5.46	14.5	7.8	5.80	13.5	7.5	6.04	9.8	5.9	4.93
			22	16.5	5.7	5.25	16.5	5.8	5.64	15.9	5.5	6.00	14.8	5.1	6.25	10.8	3.8	5.10
		25	16	14.6	12.3	4.95	14.6	12.3	5.32	14.0	11.9	5.66	13.1	11.7	5.88	9.5	9.5	4.81
			19	15.6	9.8	5.16	15.6	9.9	5.55	15.0	9.5	5.90	13.9	9.2	6.14	10.2	7.6	5.02
			22	17.1	7.5	5.34	17.1	7.6	5.74	16.4	7.3	6.11	15.3	6.9	6.35	11.2	5.4	5.19
		27	16	15.1	14.2	5.03	15.1	14.2	5.41	14.5	13.9	5.75	13.5	13.5	5.98	9.9	9.9	4.89
			19	16.1	11.7	5.25	16.1	11.7	5.64	15.5	11.4	6.00	14.4	11.0	6.24	10.5	9.4	5.10
			22	17.7	9.3	5.43	17.7	9.4	5.83	17.0	9.0	6.21	15.8	8.7	6.46	11.5	7.0	5.28
		29	16	15.3	15.3	5.05	15.3	15.3	5.42	14.7	14.7	5.77	13.7	13.7	6.00	10.0	10.0	4.90
			19	16.4	13.5	5.26	16.4	13.5	5.65	15.7	13.0	6.01	14.6	12.7	6.26	10.7	10.7	5.11
			22	17.9	11.1	5.44	17.9	11.2	5.85	17.2	10.8	6.22	16.0	10.5	6.47	11.7	8.7	5.29
		32	16	15.5	15.5	5.06	15.5	15.5	5.43	14.9	14.9	5.78	13.9	13.9	6.01	10.2	10.2	4.91
			19	16.6	13.6	5.28	16.6	13.7	5.67	16.0	13.3	6.03	14.8	12.9	6.27	10.9	10.9	5.13
			22	18.2	11.3	5.46	18.2	11.4	5.86	17.5	11.0	6.24	16.3	10.5	6.49	11.9	8.9	5.30

1-13. Capacity Table

1. Cooling Capacity Performance Data

□Combination of Single Unit

Low Silhouette Ducted Type

TC :Cooling Capacity
SHC :Sensible Heat Capacity
IPT :Cooling Power Consumption

unit : kW

				Outdoor air intake temp(□C D.B.)														
Model	Power Source	Ambient Return Air		25□C			30□C			35□C			40□C			46□C		
		DB	WB	TC	SHC	IPT	TC	SHC	IPT	TC	SHC	IPT	TC	SHC	IPT	TC	SHC	IPT
S-50PF1E5A U-50PE1E5	220V 230V 240V 50Hz 1 phase	23	16	5.9	4.4	1.61	5.6	4.3	1.74	5.2	4.1	1.92	5.0	4.0	2.13	3.9	3.5	1.40
			19	6.4	3.4	1.67	6.0	3.2	1.82	5.6	3.1	2.00	5.4	3.0	2.22	4.2	2.5	1.46
			22	7.0	2.4	1.74	6.5	2.2	1.89	6.1	2.1	2.08	5.9	2.0	2.31	4.6	1.6	1.52
		25	16	5.9	5.0	1.61	5.6	4.9	1.74	5.2	4.7	1.92	5.0	4.6	2.13	3.9	3.9	1.40
			19	6.4	4.0	1.67	6.0	3.9	1.82	5.6	3.7	2.00	5.4	3.6	2.22	4.2	3.1	1.46
			22	7.0	3.0	1.74	6.5	2.8	1.89	6.1	2.7	2.08	5.9	2.6	2.31	4.6	2.2	1.52
		27	16	5.9	5.7	1.61	5.6	5.6	1.74	5.2	5.2	1.92	5.0	5.0	2.13	3.9	3.9	1.40
			19	6.4	4.7	1.67	6.0	4.5	1.82	5.6	4.3	2.00	5.4	4.2	2.22	4.2	3.8	1.46
			22	7.0	3.6	1.74	6.5	3.4	1.89	6.1	3.3	2.08	5.9	3.2	2.31	4.6	2.8	1.52
		29	16	5.9	5.9	1.61	5.6	5.6	1.74	5.2	5.2	1.92	5.0	5.0	2.13	3.9	3.9	1.40
			19	6.4	5.3	1.67	6.0	5.1	1.82	5.6	4.9	2.00	5.4	4.9	2.22	4.2	4.2	1.46
			22	7.0	4.3	1.74	6.5	4.1	1.89	6.1	3.9	2.08	5.9	3.9	2.31	4.6	3.4	1.52
		32	16	5.9	5.9	1.61	5.6	5.6	1.74	5.2	5.2	1.92	5.0	5.0	2.13	3.9	3.9	1.40
			19	6.4	5.3	1.67	6.0	5.1	1.82	5.6	4.9	2.00	5.4	4.9	2.22	4.2	4.2	1.46
			22	7.0	4.3	1.74	6.5	4.1	1.89	6.1	3.9	2.08	5.9	3.9	2.31	4.6	3.4	1.52

1-13. Capacity Table

1. Cooling Capacity Performance Data

□Combination of Single Unit

Low Silhouette Ducted Type

TC :Cooling Capacity
SHC :Sensible Heat Capacity
IPT :Cooling Power Consumption

unit : kW

Model	Power Source	Ambient Return Air		Outdoor air intake temp(□C D.B.)														
				25□C			30□C			35□C			40□C			46□C		
		DB	WB	TC	SHC	IPT	TC	SHC	IPT	TC	SHC	IPT	TC	SHC	IPT	TC	SHC	IPT
S-60PF1E5A U-60PE1E5A	220V 230V 240V 50Hz 1 phase	23	16	7.2	6.0	1.70	7.0	5.8	1.82	6.8	5.7	1.96	6.6	5.7	1.97	6.2	5.5	1.84
			19	7.5	4.2	1.76	7.3	4.1	1.88	7.1	4.1	2.00	6.8	4.0	1.99	6.5	3.9	1.86
			22	7.9	2.6	1.84	7.7	2.6	1.95	7.4	2.5	2.06	7.1	2.4	2.01	6.7	2.3	1.88
		25	16	7.2	7.0	1.70	7.0	6.8	1.82	6.8	6.8	1.96	6.6	6.6	1.97	6.2	6.2	1.84
			19	7.5	5.2	1.76	7.3	5.2	1.88	7.1	5.1	2.00	6.8	4.9	1.99	6.5	4.8	1.86
			22	7.9	3.5	1.84	7.7	3.6	1.95	7.4	3.5	2.06	7.1	3.3	2.01	6.7	3.2	1.88
		27	16	7.2	7.2	1.70	7.0	7.0	1.82	6.8	6.8	1.96	6.6	6.6	1.97	6.2	6.2	1.84
			19	7.5	6.1	1.76	7.3	6.1	1.88	7.1	6.0	2.00	6.8	5.9	1.99	6.5	5.8	1.86
			22	7.9	4.5	1.84	7.7	4.5	1.95	7.4	4.4	2.06	7.1	4.3	2.01	6.7	4.2	1.88
		29	16	7.2	7.2	1.70	7.0	7.0	1.82	6.8	6.8	1.96	6.6	6.6	1.97	6.2	6.2	1.84
			19	7.5	7.0	1.76	7.3	7.1	1.88	7.1	7.0	2.00	6.8	6.8	1.99	6.5	6.5	1.86
			22	7.9	5.4	1.84	7.7	5.4	1.95	7.4	5.4	2.06	7.1	5.2	2.01	6.7	5.1	1.88
		32	16	7.2	7.2	1.70	7.0	7.0	1.82	6.8	6.8	1.96	6.6	6.6	1.97	6.2	6.2	1.84
			19	7.5	7.0	1.76	7.3	7.1	1.88	7.1	7.0	2.00	6.8	6.8	1.99	6.5	6.5	1.86
			22	7.9	5.4	1.84	7.7	5.4	1.95	7.4	5.4	2.06	7.1	5.2	2.01	6.7	5.1	1.88
S-71PF1E5A U-71PE1E5A (U-71PE1E8A)	220V 230V 240V 50Hz 1 phase (3 phase)	23	16	8.1	6.1	2.25	7.9	6.0	2.41	7.6	5.8	2.59	7.2	5.6	2.57	6.3	5.2	2.20
			19	8.5	4.5	2.33	8.3	4.4	2.49	8.0	4.3	2.65	7.5	4.0	2.60	6.6	3.8	2.23
			22	9.0	3.0	2.44	8.7	2.8	2.58	8.3	2.7	2.73	7.8	2.6	2.62	6.8	2.3	2.25
		25	16	8.1	7.0	2.25	7.9	6.9	2.41	7.6	6.7	2.59	7.2	6.5	2.57	6.3	6.1	2.20
			19	8.5	5.3	2.33	8.3	5.3	2.49	8.0	5.2	2.65	7.5	4.9	2.60	6.6	4.7	2.23
			22	9.0	3.8	2.44	8.7	3.7	2.58	8.3	3.6	2.73	7.8	3.4	2.62	6.8	3.1	2.25
		27	16	8.1	7.8	2.25	7.9	7.8	2.41	7.6	7.6	2.59	7.2	7.2	2.57	6.3	6.3	2.20
			19	8.5	6.2	2.33	8.3	6.1	2.49	8.0	6.0	2.65	7.5	5.8	2.60	6.6	5.5	2.23
			22	9.0	4.7	2.44	8.7	4.6	2.58	8.3	4.5	2.73	7.8	4.3	2.62	6.8	4.0	2.25
		29	16	8.1	8.1	2.25	7.9	7.9	2.41	7.6	7.6	2.59	7.2	7.2	2.57	6.3	6.3	2.20
			19	8.5	7.1	2.33	8.3	7.0	2.49	8.0	6.9	2.65	7.5	6.7	2.60	6.6	6.4	2.23
			22	9.0	5.6	2.44	8.7	5.5	2.58	8.3	5.3	2.73	7.8	5.2	2.62	6.8	4.8	2.25
		32	16	8.1	8.1	2.25	7.9	7.9	2.41	7.6	7.6	2.59	7.2	7.2	2.57	6.3	6.3	2.20
			19	8.5	7.1	2.33	8.3	7.0	2.49	8.0	6.9	2.65	7.5	6.7	2.60	6.6	6.4	2.23
			22	9.0	5.6	2.44	8.7	5.5	2.58	8.3	5.3	2.73	7.8	5.2	2.62	6.8	4.8	2.25
S-100PF1E5A U-100PE1E5A (U-100PE1E8A)	220V 230V 240V 50Hz 1 phase (3 phase)	23	16	11.4	9.3	3.00	11.4	9.3	3.23	10.9	9.0	3.43	10.2	8.9	3.57	7.4	7.4	2.92
			19	12.1	6.8	3.13	12.1	6.8	3.36	11.7	6.7	3.58	10.9	6.4	3.72	7.9	5.2	3.04
			22	13.3	4.5	3.24	13.3	4.5	3.48	12.8	4.3	3.70	11.9	4.0	3.85	8.7	2.9	3.15
		25	16	11.8	11.2	3.05	11.8	11.2	3.28	11.3	10.8	3.49	10.5	10.5	3.63	7.7	7.7	2.97
			19	12.6	8.6	3.18	12.6	8.6	3.42	12.1	8.3	3.64	11.2	8.2	3.79	8.2	6.9	3.09
			22	13.8	6.2	3.29	13.8	6.2	3.54	13.2	6.0	3.77	12.3	5.7	3.92	9.0	4.6	3.20
		27	16	12.2	12.2	3.10	12.2	12.2	3.33	11.7	11.7	3.55	10.9	10.9	3.69	8.0	8.0	3.02
			19	13.0	10.6	3.24	13.0	10.6	3.48	12.5	10.3	3.70	11.6	10.1	3.85	8.5	8.5	3.15
			22	14.2	8.1	3.35	14.2	8.1	3.60	13.7	7.8	3.83	12.7	7.6	3.98	9.3	6.2	3.25
		29	16	12.4	12.4	3.11	12.4	12.4	3.34	11.9	11.9	3.56	11.0	11.0	3.70	8.1	8.1	3.02
			19	13.2	12.4	3.25	13.2	12.4	3.49	12.7	12.1	3.71	11.8	11.8	3.86	8.6	8.6	3.15
			22	14.5	10.0	3.36	14.5	10.0	3.61	13.9	9.7	3.84	12.9	9.4	3.99	9.5	8.1	3.26
		32	16	12.5	12.5	3.12	12.5	12.5	3.35	12.1	12.1	3.56	11.2	11.2	3.71	8.2	8.2	3.03
			19	13.4	12.6	3.25	13.4	12.6	3.50	12.9	12.3	3.72	12.0	12.0	3.87	8.8	8.8	3.16
			22	14.7	10.2	3.37	14.7	10.2	3.62	14.1	9.8	3.85	13.1	9.5	4.00	9.6	8.2	3.27
S-125PF1E5A U-125PE1E5A (U-125PE1E8A)	220V 230V 240V 50Hz 1 phase (3 phase)	23	16	12.7	9.5	3.73	12.7	9.6	4.01	12.2	9.3	4.27	11.4	9.0	4.44	8.3	7.6	3.63
			19	13.6	7.2	3.89	13.6	7.3	4.18	13.1	7.0	4.45	12.2	6.7	4.63	8.9	5.3	3.78
			22	14.9	5.0	4.03	14.9	5.0	4.33	14.3	4.8	4.60	13.3	4.5	4.79	9.7	3.2	3.91
		25	16	13.2	11.4	3.80	13.2	11.4	4.08	12.7	11.0	4.34	11.8	10.8	4.51	8.6	8.6	3.69
			19	14.1	9.0	3.96	14.1	9.0	4.25	13.5	8.6	4.52	12.6	8.4	4.71	9.2	7.0	3.85
			22	15.4	6.7	4.10	15.4	6.7	4.40	14.8	6.4	4.68	13.8	6.1	4.87	10.1	4.8	3.98
		27	16	13.6	13.2	3.86	13.6	13.3	4.15	13.1	12.8	4.41	12.2	12.2	4.59	8.9	8.9	3.75
			19	14.6	10.8	4.03	14.6	10.8	4.32	14.0	10.5	4.60	13.0	10.2	4.78	9.5	8.7	3.91
			22	16.0	8.5	4.16	16.0	8.5	4.47	15.3	8.2	4.76	14.3	7.9	4.95	10.4	6.4	4.05
		29	16	13.8	13.8	3.87	13.8	13.8	4.16	13.3	13.3	4.42	12.4	12.4	4.60	9.0	9.0	3.76
			19	14.8	12.5	4.03	14.8	12.6	4.33	14.2	12.2	4.61	13.2	11.9	4.80	9.7	9.7	3.92
			22	16.2	10.2	4.17	16.2	10.2	4.48	15.6	9.9	4.77	14.5	9.6	4.96	10.6	8.0	4.06
		32	16	14.0	14.0	3.88	14.0	14.0	4.17	13.5	13.5	4.43	12.6	12.6	4.61	9.2	9.2	3.77
			19	15.0	12.7	4.04	15.0	12.8	4.35	14.4	12.3	4.62	13.4	12.1	4.81	9.8	9.8	3.93
			22	16.4	10.3	4.18	16.4	10.4	4.50	15.8	10.0	4.78	14.7	9.8	4.97	10.7	8.1	4.07
S-140PF1E5A U-140PE1E5A (U-140PE1E8A)	220V 230V 240V 50Hz 1 phase (3 phase)	23	16	14.1	10.2	4.87	14.1	10.3	5.23	13.6	9.9	5.56	12.6	9.6	5.79	9.2	8.1	4.73
			19	15.1	7.9	5.08	15.1	8.0	5.46	14.5	7.7	5.80	13.5	7.3	6.04	9.8	5.8	4.93
			22	16.5	5.6	5.25	16.5	5.5	5.64	15.9	5.4	6.00	14.8	5.0	6.25	10.8	3.6	5.10
		25	16	14.6	12.1	4.95	14.6	12.1	5.32	14.0	11.7	5.66	13.1	11.5	5.88	9.5	9.5	4.81
			19	15.6	9.7	5.16	15.6	9.7	5.55	15.0	9.3	5.90	13.9	9.0	6.14	10.2	7.4	5.02
			22	17.1	7.3	5.34	17.1	7.3	5.74	16.4	7.0	6.11	15.3	6.7	6.35	11.2	5.2	5.19
		27	16	15.1	14.0	5.03	15.1	14.0	5.41	14.5	13.6	5.75	13.5	13.4	5.98	9.9	9.9	4.89
			19	16.1	11.5	5.25	16.1	11.6	5.64	15.5	11.2	6.00	14.4	10.9	6.24	10.5	9.1	5.10
			22	17.7	9.2	5.43	17.7	9.1	5.83	17.0	8.9	6.21	15.8	8.4	6.46	11.5	6.9	5.28
		29	16	15.3	15.3	5.05	15.3	15.3	5.42	14.7	14.7	5.77	13.7	13.7	6.00	10.0	10.0	4.90
			19	16.4	13.3	5.26	16.4	13.4	5.65	15.7	12.9	6.01	14.6	12.6	6.26	10.7	10.7	5.11
			22	17.9	10.9	5.44	17.9	10.9	5.85	17.2	10.5	6.22	16.0	10.2	6.47	11.7	8.5	5.29
		32	16	15.5	15.5	5.06	15.5	15.5	5.43	14.9	14.9	5.78	13.9	13.9	6.01	10.2	10.2	4.91
			19	16.6	13.5	5.28	16.6	13.6	5.67	16.0	13.1	6.03	14.8	12.8	6.27	10.9	10.9	5.13
			22	18.2	11.0	5.46	18.2	11.1	5.86	17.5	10.7	6.24	16.3	10.4	6.49	11.9	8.6	5.30

1-13. Capacity Table

1. Cooling Capacity Performance Data

□Combination of Multiple Unit

Low Silhouette Ducted Type

TC :Cooling Capacity
SHC :Sensible Heat Capacity
IPT :Cooling Power Consumption

unit : kW

Model	Power Source	Ambient Return Air		Outdoor air intake temp(□C D.B.)														
				25□C			30□C			35□C			40□C			46□C		
		DB	WB	TC	SHC	IPT	TC	SHC	IPT	TC	SHC	IPT	TC	SHC	IPT	TC	SHC	IPT
S-36PF1E5A×2 U-71PE1E5A (U-71PE1E8A)	220V 230V 240V 50Hz 1 phase (3 phase)	23	16	8.1	7.1	2.25	7.9	7.0	2.41	7.6	6.9	2.59	7.2	6.6	2.57	6.3	6.3	2.20
			19	8.5	5.0	2.33	8.3	4.9	2.49	8.0	4.8	2.65	7.5	4.6	2.60	6.6	4.3	2.23
			22	9.0	3.0	2.44	8.7	2.9	2.58	8.3	2.8	2.73	7.8	2.6	2.62	6.8	2.3	2.25
		25	16	8.1	8.1	2.25	7.9	7.9	2.41	7.6	7.6	2.59	7.2	7.2	2.57	6.3	6.3	2.20
			19	8.5	6.2	2.33	8.3	6.1	2.49	8.0	6.0	2.65	7.5	5.8	2.60	6.6	5.6	2.23
			22	9.0	4.2	2.44	8.7	4.1	2.58	8.3	3.9	2.73	7.8	3.8	2.62	6.8	3.5	2.25
		27	16	8.1	8.1	2.25	7.9	7.9	2.41	7.6	7.6	2.59	7.2	7.2	2.57	6.3	6.3	2.20
			19	8.5	7.5	2.33	8.3	7.4	2.49	8.0	7.2	2.65	7.5	7.1	2.60	6.6	6.6	2.23
			22	9.0	5.4	2.44	8.7	5.3	2.58	8.3	5.2	2.73	7.8	5.0	2.62	6.8	4.6	2.25
		29	16	8.1	8.1	2.25	7.9	7.9	2.41	7.6	7.6	2.59	7.2	7.2	2.57	6.3	6.3	2.20
			19	8.5	8.5	2.33	8.3	8.3	2.49	8.0	8.0	2.65	7.5	7.5	2.60	6.6	6.6	2.23
			22	9.0	6.6	2.44	8.7	6.6	2.58	8.3	6.4	2.73	7.8	6.2	2.62	6.8	5.9	2.25
		32	16	8.1	8.1	2.25	7.9	7.9	2.41	7.6	7.6	2.59	7.2	7.2	2.57	6.3	6.3	2.20
			19	8.5	8.5	2.33	8.3	8.3	2.49	8.0	8.0	2.65	7.5	7.5	2.60	6.6	6.6	2.23
			22	9.0	6.6	2.44	8.7	6.6	2.58	8.3	6.4	2.73	7.8	6.2	2.62	6.8	5.9	2.25
S-36PF1E5A×3 U-100PE1E5A (U-100PE1E8A)	220V 230V 240V 50Hz 1 phase (3 phase)	23	16	11.4	10.5	3.00	11.4	10.5	3.23	10.9	10.1	3.43	10.2	10.1	3.57	7.4	7.4	2.92
			19	12.1	7.4	3.13	12.1	7.4	3.36	11.7	7.3	3.58	10.9	7.0	3.72	7.9	5.8	3.04
			22	13.3	4.5	3.24	13.3	4.5	3.48	12.8	4.3	3.70	11.9	4.0	3.85	8.7	3.0	3.15
		25	16	11.8	11.8	3.05	11.8	11.8	3.28	11.3	11.3	3.49	10.5	10.5	3.63	7.7	7.7	2.97
			19	12.6	9.6	3.18	12.6	9.6	3.42	12.1	9.4	3.64	11.2	9.2	3.79	8.2	8.0	3.09
			22	13.8	6.7	3.29	13.8	6.7	3.54	13.2	6.4	3.77	12.3	6.2	3.92	9.0	5.1	3.20
		27	16	12.2	12.2	3.10	12.2	12.2	3.33	11.7	11.7	3.55	10.9	10.9	3.69	8.0	8.0	3.02
			19	13.0	12.1	3.24	13.0	12.1	3.48	12.5	11.8	3.70	11.6	11.6	3.85	8.5	8.5	3.15
			22	14.2	9.0	3.35	14.2	9.0	3.60	13.7	8.7	3.83	12.7	8.6	3.98	9.3	7.3	3.25
		29	16	12.4	12.4	3.11	12.4	12.4	3.34	11.9	11.9	3.56	11.0	11.0	3.70	8.1	8.1	3.02
			19	13.2	13.2	3.25	13.2	13.2	3.49	12.7	12.7	3.71	11.8	11.8	3.86	8.6	8.6	3.15
			22	14.5	11.2	3.36	14.5	11.2	3.61	13.9	11.0	3.84	12.9	10.9	3.99	9.5	9.4	3.26
		32	16	12.5	12.5	3.12	12.5	12.5	3.35	12.1	12.1	3.56	11.2	11.2	3.71	8.2	8.2	3.03
			19	13.4	13.4	3.25	13.4	13.4	3.50	12.9	12.9	3.72	12.0	12.0	3.87	8.8	8.8	3.16
			22	14.7	11.4	3.37	14.7	11.4	3.62	14.1	11.1	3.85	13.1	11.0	4.00	9.6	9.5	3.27
S-50PF1E5A×2 U-100PE1E5A (U-100PE1E8A)	220V 230V 240V 50Hz 1 phase (3 phase)	23	16	11.4	9.2	3.00	11.4	9.2	3.23	10.9	8.9	3.43	10.2	8.7	3.57	7.4	7.4	2.92
			19	12.1	6.8	3.13	12.1	6.8	3.36	11.7	6.6	3.58	10.9	6.3	3.72	7.9	5.1	3.04
			22	13.3	4.5	3.24	13.3	4.5	3.48	12.8	4.3	3.70	11.9	4.0	3.85	8.7	2.9	3.15
		25	16	11.8	11.0	3.05	11.8	11.0	3.28	11.3	10.6	3.49	10.5	10.5	3.63	7.7	7.7	2.97
			19	12.6	8.5	3.18	12.6	8.5	3.42	12.1	8.2	3.64	11.2	8.1	3.79	8.2	6.8	3.09
			22	13.8	6.2	3.29	13.8	6.2	3.54	13.2	5.9	3.77	12.3	5.7	3.92	9.0	4.4	3.20
		27	16	12.2	12.2	3.10	12.2	12.2	3.33	11.7	11.7	3.55	10.9	10.9	3.69	8.0	8.0	3.02
			19	13.0	10.5	3.24	13.0	10.5	3.48	12.5	10.1	3.70	11.6	9.9	3.85	8.5	8.5	3.15
			22	14.2	8.0	3.35	14.2	8.0	3.60	13.7	7.8	3.83	12.7	7.5	3.98	9.3	6.2	3.25
		29	16	12.4	12.4	3.11	12.4	12.4	3.34	11.9	11.9	3.56	11.0	11.0	3.70	8.1	8.1	3.02
			19	13.2	12.2	3.25	13.2	12.2	3.49	12.7	11.8	3.71	11.8	11.8	3.86	8.6	8.6	3.15
			22	14.5	9.8	3.36	14.5	9.8	3.61	13.9	9.5	3.84	12.9	9.2	3.99	9.5	7.9	3.26
		32	16	12.5	12.5	3.12	12.5	12.5	3.35	12.1	12.1	3.56	11.2	11.2	3.71	8.2	8.2	3.03
			19	13.4	12.3	3.25	13.4	12.3	3.50	12.9	12.0	3.72	12.0	12.0	3.87	8.8	8.8	3.16
			22	14.7	9.9	3.37	14.7	9.9	3.62	14.1	9.7	3.85	13.1	9.4	4.00	9.6	8.0	3.27
S-36PF1E5A×4 U-125PE1E5A (U-125PE1E8A)	220V 230V 240V 50Hz 1 phase (3 phase)	23	16	12.7	12.1	3.73	12.7	12.1	4.01	12.2	11.7	4.27	11.4	11.4	4.44	8.3	8.3	3.63
			19	13.6	8.6	3.89	13.6	8.6	4.18	13.1	8.3	4.45	12.2	8.1	4.63	8.9	6.8	3.78
			22	14.9	4.9	4.03	14.9	4.9	4.33	14.3	4.7	4.60	13.3	4.4	4.79	9.7	3.3	3.91
		25	16	13.2	13.2	3.80	13.2	13.2	4.08	12.7	12.7	4.34	11.8	11.8	4.51	8.6	8.6	3.69
			19	14.1	11.2	3.96	14.1	11.3	4.25	13.5	10.9	4.52	12.6	10.7	4.71	9.2	9.2	3.85
			22	15.4	7.6	4.10	15.4	7.5	4.40	14.8	7.5	4.68	13.8	7.1	4.87	10.1	5.8	3.98
		27	16	13.6	13.6	3.86	13.6	13.6	4.15	13.1	13.1	4.41	12.2	12.2	4.59	8.9	8.9	3.75
			19	14.6	14.0	4.03	14.6	14.1	4.32	14.0	13.6	4.60	13.0	13.0	4.78	9.5	9.5	3.91
			22	16.0	10.4	4.16	16.0	10.6	4.47	15.3	10.0	4.76	14.3	9.9	4.95	10.4	8.5	4.05
		29	16	13.8	13.8	3.87	13.8	13.8	4.16	13.3	13.3	4.42	12.4	12.4	4.60	9.0	9.0	3.76
			19	14.8	14.8	4.03	14.8	14.8	4.33	14.2	14.2	4.61	13.2	13.2	4.80	9.7	9.7	3.92
			22	16.2	13.2	4.17	16.2	13.2	4.48	15.6	12.7	4.77	14.5	12.7	4.96	10.6	10.6	4.06
		32	16	14.0	14.0	3.88	14.0	14.0	4.17	13.5	13.5	4.43	12.6	12.6	4.61	9.2	9.2	3.77
			19	15.0	15.0	4.04	15.0	15.0	4.35	14.4	14.4	4.62	13.4	13.4	4.81	9.8	9.8	3.93
			22	16.4	13.3	4.18	16.4	13.3	4.50	15.8	12.9	4.78	14.7	12.8	4.97	10.7	10.7	4.07
S-45PF1E5A×3 U-125PE1E5A (U-125PE1E8A)	220V 230V 240V 50Hz 1 phase (3 phase)	23	16	12.7	10.4	3.73	12.7	10.4	4.01	12.2	10.1	4.27	11.4	9.9	4.44	8.3	8.3	3.63
			19	13.6	7.7	3.89	13.6	7.7	4.18	13.1	7.4	4.45	12.2	7.1	4.63	8.9	5.9	3.78
			22	14.9	5.0	4.03	14.9	4.9	4.33	14.3	4.8	4.60	13.3	4.5	4.79	9.7	3.2	3.91
		25	16	13.2	12.6	3.80	13.2	12.7	4.08	12.7	12.3	4.34	11.8	11.8	4.51	8.6	8.6	3.69
			19	14.1	9.8	3.96	14.1	9.8	4.25	13.5	9.4	4.52	12.6	9.3	4.71	9.2	7.8	3.85
			22	15.4	7.0	4.10	15.4	6.9	4.40	14.8	6.8	4.68	13.8	6.5	4.87	10.1	5.1	3.98
		27	16	13.6	13.6	3.86	13.6	13.6	4.15	13.1	13.1	4.41	12.2	12.2	4.59	8.9	8.9	3.75
			19	14.6	12.0	4.03	14.6	12.0	4.32	14.0	11.5	4.60	13.0	11.4	4.78	9.5	9.5	3.91
			22	16.0	9.2	4.16	16.0	9.1	4.47	15.3	8.9	4.76	14.3	8.5	4.95	10.4	7.1	4.05
		29	16	13.8	13.8	3.87	13.8	13.8	4.16	13.3	13.3	4.42	12.4	12.4	4.60	9.0	9.0	3.76
			19	14.8	14.0	4.03	14.8	14.1	4.33	14.2	13.6	4.61	13.2	13.2	4.80	9.7	9.7	3.92
			22	16.2	11.2	4.17	16.2	11.2	4.48	15.6	11.0	4.77	14.5	10.6	4.96	10.6	9.1	4.06
		32	16	14.0	14.0	3.88	14.0	14.0	4.17	13.5	13.5	4.43	12.6	12.6	4.61	9.2	9.2	3.77
			19	15.0	14.2	4.04	15.0	14.3	4.35	14.4	13.8	4.62	13.4	13.4	4.81	9.8	9.8	3.93
			22	16.4	11.4	4.18	16.4	11.3	4.50	15.8	11.1	4.78	14.7	10.7	4.97	10.7	9.2	4.07

1-13. Capacity Table

1. Cooling Capacity Performance Data

□Combination of Multiple Unit

Low Silhouette Ducted Type

TC :Cooling Capacity
SHC :Sensible Heat Capacity
IPT :Cooling Power Consumption

unit : kW

Model	Power Source	Ambient Return Air		Outdoor air intake temp(□C D.B.)														
				25□C			30□C			35□C			40□C			46□C		
		DB	WB	TC	SHC	IPT	TC	SHC	IPT	TC	SHC	IPT	TC	SHC	IPT	TC	SHC	IPT
S-60PF1E5A×2 U-125PE1E5A (U-125PE1E8A)	220V 230V 240V 50Hz 1 phase (3 phase)	23	16	12.7	10.5	3.73	12.7	10.5	4.01	12.2	10.2	4.27	11.4	10.0	4.44	8.3	8.3	3.63
			19	13.6	7.8	3.89	13.6	7.7	4.18	13.1	7.4	4.45	12.2	7.2	4.63	8.9	6.0	3.78
			22	14.9	5.0	4.03	14.9	4.9	4.33	14.3	4.8	4.60	13.3	4.5	4.79	9.7	3.3	3.91
		25	16	13.2	12.7	3.80	13.2	12.7	4.08	12.7	12.3	4.34	11.8	11.8	4.51	8.6	8.6	3.69
			19	14.1	9.8	3.96	14.1	9.8	4.25	13.5	9.4	4.52	12.6	9.3	4.71	9.2	7.9	3.85
			22	15.4	7.1	4.10	15.4	6.9	4.40	14.8	6.8	4.68	13.8	6.5	4.87	10.1	5.2	3.98
		27	16	13.6	13.6	3.86	13.6	13.6	4.15	13.1	13.1	4.41	12.2	12.2	4.59	8.9	8.9	3.75
			19	14.6	12.1	4.03	14.6	12.1	4.32	14.0	11.6	4.60	13.0	11.5	4.78	9.5	9.5	3.91
			22	16.0	9.3	4.16	16.0	9.1	4.47	15.3	8.9	4.76	14.3	8.7	4.95	10.4	7.2	4.05
		29	16	13.8	13.8	3.87	13.8	13.8	4.16	13.3	13.3	4.42	12.4	12.4	4.60	9.0	9.0	3.76
			19	14.8	14.1	4.03	14.8	14.1	4.33	14.2	13.6	4.61	13.2	13.2	4.80	9.7	9.7	3.92
			22	16.2	11.4	4.17	16.2	11.3	4.48	15.6	11.0	4.77	14.5	10.7	4.96	10.6	9.2	4.06
		32	16	14.0	14.0	3.88	14.0	14.0	4.17	13.5	13.5	4.43	12.6	12.6	4.61	9.2	9.2	3.77
			19	15.0	14.3	4.04	15.0	14.3	4.35	14.4	13.8	4.62	13.4	13.4	4.81	9.8	9.8	3.93
			22	16.4	11.5	4.18	16.4	11.5	4.50	15.8	11.1	4.78	14.7	10.9	4.97	10.7	9.3	4.07
S-50PF1E5A×3 U-140PE1E5A (U-140PE1E8A)	220V 230V 240V 50Hz 1 phase (3 phase)	23	16	14.1	11.6	4.87	14.1	11.7	5.23	13.6	11.5	5.56	12.6	11.1	5.79	9.2	9.2	4.73
			19	15.1	8.6	5.08	15.1	8.6	5.46	14.5	8.3	5.80	13.5	8.0	6.04	9.8	6.5	4.93
			22	16.5	5.5	5.25	16.5	5.5	5.64	15.9	5.3	6.00	14.8	4.9	6.25	10.8	3.6	5.10
		25	16	14.6	14.1	4.95	14.6	14.2	5.32	14.0	13.7	5.66	13.1	13.1	5.88	9.5	9.5	4.81
			19	15.6	10.9	5.16	15.6	11.0	5.55	15.0	10.6	5.90	13.9	10.3	6.14	10.2	8.7	5.02
			22	17.1	7.8	5.34	17.1	7.8	5.74	16.4	7.5	6.11	15.3	7.2	6.35	11.2	5.7	5.19
		27	16	15.1	15.1	5.03	15.1	15.1	5.41	14.5	14.5	5.75	13.5	13.5	5.98	9.9	9.9	4.89
			19	16.1	13.4	5.25	16.1	13.4	5.64	15.5	13.0	6.00	14.4	12.8	6.24	10.5	10.5	5.10
			22	17.7	10.3	5.43	17.7	10.2	5.83	17.0	9.9	6.21	15.8	9.6	6.46	11.5	8.0	5.28
		29	16	15.3	15.3	5.05	15.3	15.3	5.42	14.7	14.7	5.77	13.7	13.7	6.00	10.0	10.0	4.90
			19	16.4	15.7	5.26	16.4	15.8	5.65	15.7	15.3	6.01	14.6	14.6	6.26	10.7	10.7	5.11
			22	17.9	12.5	5.44	17.9	12.6	5.85	17.2	12.2	6.22	16.0	11.9	6.47	11.7	10.2	5.29
		32	16	15.5	15.5	5.06	15.5	15.5	5.43	14.9	14.9	5.78	13.9	13.9	6.01	10.2	10.2	4.91
			19	16.6	15.9	5.28	16.6	16.0	5.67	16.0	15.5	6.03	14.8	14.8	6.27	10.9	10.9	5.13
			22	18.2	12.7	5.46	18.2	12.8	5.86	17.5	12.4	6.24	16.3	12.1	6.49	11.9	10.4	5.30
S-71PF1E5A×2 U-140PE1E5A (U-140PE1E8A)	220V 230V 240V 50Hz 1 phase (3 phase)	23	16	14.1	11.0	4.87	14.1	11.0	5.23	13.6	10.8	5.56	12.6	10.4	5.79	9.2	8.9	4.73
			19	15.1	8.2	5.08	15.1	8.3	5.46	14.5	8.0	5.80	13.5	7.7	6.04	9.8	6.2	4.93
			22	16.5	5.5	5.25	16.5	5.5	5.64	15.9	5.3	6.00	14.8	4.9	6.25	10.8	3.6	5.10
		25	16	14.6	13.1	4.95	14.6	13.2	5.32	14.0	12.9	5.66	13.1	12.6	5.88	9.5	9.5	4.81
			19	15.6	10.4	5.16	15.6	10.3	5.55	15.0	10.0	5.90	13.9	9.7	6.14	10.2	8.2	5.02
			22	17.1	7.5	5.34	17.1	7.6	5.74	16.4	7.3	6.11	15.3	6.9	6.35	11.2	5.5	5.19
		27	16	15.1	15.1	5.03	15.1	15.1	5.41	14.5	14.5	5.75	13.5	13.5	5.98	9.9	9.9	4.89
			19	16.1	12.5	5.25	16.1	12.6	5.64	15.5	12.2	6.00	14.4	11.9	6.24	10.5	10.2	5.10
			22	17.7	9.7	5.43	17.7	9.7	5.83	17.0	9.4	6.21	15.8	9.0	6.46	11.5	7.4	5.28
		29	16	15.3	15.3	5.05	15.3	15.3	5.42	14.7	14.7	5.77	13.7	13.7	6.00	10.0	10.0	4.90
			19	16.4	14.6	5.26	16.4	14.7	5.65	15.7	14.1	6.01	14.6	13.9	6.26	10.7	10.7	5.11
			22	17.9	11.7	5.44	17.9	11.8	5.85	17.2	11.5	6.22	16.0	11.2	6.47	11.7	9.4	5.29
		32	16	15.5	15.5	5.06	15.5	15.5	5.43	14.9	14.9	5.78	13.9	13.9	6.01	10.2	10.2	4.91
			19	16.6	14.7	5.28	16.6	14.8	5.67	16.0	14.4	6.03	14.8	14.1	6.27	10.9	10.9	5.13
			22	18.2	11.9	5.46	18.2	12.0	5.86	17.5	11.7	6.24	16.3	11.4	6.49	11.9	9.6	5.30

1-13. Capacity Table

1. Cooling Capacity Performance Data

□Combination of Single Unit

Ducted Type

TC :Cooling Capacity
SHC :Sensible Heat Capacity
IPT :Cooling Power Consumption

unit : kW

				Outdoor air intake temp(□C D.B.)														
Model	Power Source	Ambient Return Air		25□C			30□C			35□C			40□C			46□C		
		DB	WB	TC	SHC	IPT	TC	SHC	IPT	TC	SHC	IPT	TC	SHC	IPT	TC	SHC	IPT
S-50PN1E5A U-50PE1E5	220V 230V 240V 50Hz 1 phase	23	16	5.9	4.3	1.85	5.6	4.2	2.01	5.2	4.0	2.22	5.0	3.9	2.46	3.9	3.4	1.62
			19	6.4	3.3	1.93	6.0	3.2	2.10	5.6	3.0	2.31	5.4	2.9	2.56	4.2	2.5	1.68
			22	7.0	2.4	2.01	6.5	2.2	2.18	6.1	2.0	2.40	5.9	2.0	2.67	4.6	1.5	1.75
		25	16	5.9	5.0	1.85	5.6	4.8	2.01	5.2	4.6	2.22	5.0	4.5	2.46	3.9	3.9	1.62
			19	6.4	3.9	1.93	6.0	3.8	2.10	5.6	3.6	2.31	5.4	3.5	2.56	4.2	3.1	1.68
			22	7.0	3.0	2.01	6.5	2.8	2.18	6.1	2.6	2.40	5.9	2.6	2.67	4.6	2.1	1.75
		27	16	5.9	5.6	1.85	5.6	5.4	2.01	5.2	5.2	2.22	5.0	5.0	2.46	3.9	3.9	1.62
			19	6.4	4.6	1.93	6.0	4.4	2.10	5.6	4.2	2.31	5.4	4.1	2.56	4.2	3.7	1.68
			22	7.0	3.6	2.01	6.5	3.4	2.18	6.1	3.2	2.40	5.9	3.2	2.67	4.6	2.7	1.75
		29	16	5.9	5.9	1.85	5.6	5.6	2.01	5.2	5.2	2.22	5.0	5.0	2.46	3.9	3.9	1.62
			19	6.4	5.1	1.93	6.0	5.0	2.10	5.6	4.8	2.31	5.4	4.7	2.56	4.2	4.2	1.68
			22	7.0	4.2	2.01	6.5	4.0	2.18	6.1	3.8	2.40	5.9	3.8	2.67	4.6	3.3	1.75
		32	16	5.9	5.9	1.85	5.6	5.6	2.01	5.2	5.2	2.22	5.0	5.0	2.46	3.9	3.9	1.62
			19	6.4	5.1	1.93	6.0	5.0	2.10	5.6	4.8	2.31	5.4	4.7	2.56	4.2	4.2	1.68
			22	7.0	4.2	2.01	6.5	4.0	2.18	6.1	3.8	2.40	5.9	3.8	2.67	4.6	3.3	1.75

1-13. Capacity Table

1. Cooling Capacity Performance Data

□Combination of Single Unit

Ducted Type

TC :Cooling Capacity
SHC :Sensible Heat Capacity
IPT :Cooling Power Consumption

unit : kW

Model	Power Source	Ambient Return Air		Outdoor air intake temp(℃ D.B.)														
				25℃			30℃			35℃			40℃			46℃		
		DB	WB	TC	SHC	IPT	TC	SHC	IPT	TC	SHC	IPT	TC	SHC	IPT	TC	SHC	IPT
S-60PN1E5A U-60PE1E5A	220V 230V 240V 50Hz 1 phase	23	16	7.2	6.0	1.79	7.0	5.9	1.92	6.8	5.8	2.06	6.6	5.7	2.07	6.2	5.5	1.94
			19	7.5	4.2	1.85	7.3	4.2	1.98	7.1	4.1	2.11	6.8	4.0	2.09	6.5	3.9	1.96
			22	7.9	2.6	1.93	7.7	2.6	2.05	7.4	2.5	2.17	7.1	2.4	2.12	6.7	2.3	1.98
		25	16	7.2	7.1	1.79	7.0	6.9	1.92	6.8	6.8	2.06	6.6	6.6	2.07	6.2	6.2	1.94
			19	7.5	5.3	1.85	7.3	5.2	1.98	7.1	5.1	2.11	6.8	4.9	2.09	6.5	4.8	1.96
			22	7.9	3.5	1.93	7.7	3.6	2.05	7.4	3.5	2.17	7.1	3.3	2.12	6.7	3.2	1.98
		27	16	7.2	7.2	1.79	7.0	7.0	1.92	6.8	6.8	2.06	6.6	6.6	2.07	6.2	6.2	1.94
			19	7.5	6.2	1.85	7.3	6.1	1.98	7.1	6.0	2.11	6.8	6.0	2.09	6.5	5.9	1.96
			22	7.9	4.6	1.93	7.7	4.5	2.05	7.4	4.4	2.17	7.1	4.3	2.12	6.7	4.2	1.98
		29	16	7.2	7.2	1.79	7.0	7.0	1.92	6.8	6.8	2.06	6.6	6.6	2.07	6.2	6.2	1.94
			19	7.5	7.1	1.85	7.3	7.1	1.98	7.1	7.1	2.11	6.8	6.8	2.09	6.5	6.5	1.96
			22	7.9	5.5	1.93	7.7	5.4	2.05	7.4	5.4	2.17	7.1	5.3	2.12	6.7	5.1	1.98
		32	16	7.2	7.2	1.79	7.0	7.0	1.92	6.8	6.8	2.06	6.6	6.6	2.07	6.2	6.2	1.94
			19	7.5	7.1	1.85	7.3	7.1	1.98	7.1	7.1	2.11	6.8	6.8	2.09	6.5	6.5	1.96
			22	7.9	5.5	1.93	7.7	5.4	2.05	7.4	5.4	2.17	7.1	5.3	2.12	6.7	5.1	1.98
S-71PN1E5A U-71PE1E5A (U-71PE1E8A)	220V 230V 240V 50Hz 1 phase (3 phase)	23	16	8.1	6.3	2.34	7.9	6.2	2.50	7.6	6.0	2.69	7.2	5.9	2.67	6.3	5.5	2.28
			19	8.5	4.6	2.42	8.3	4.5	2.59	8.0	4.4	2.75	7.5	4.3	2.70	6.6	3.9	2.31
			22	9.0	3.0	2.53	8.7	2.9	2.68	8.3	2.8	2.83	7.8	2.6	2.72	6.8	2.3	2.34
		25	16	8.1	7.2	2.34	7.9	7.1	2.50	7.6	7.0	2.69	7.2	6.8	2.67	6.3	6.3	2.28
			19	8.5	5.6	2.42	8.3	5.5	2.59	8.0	5.3	2.75	7.5	5.1	2.70	6.6	4.8	2.31
			22	9.0	3.9	2.53	8.7	3.8	2.68	8.3	3.7	2.83	7.8	3.5	2.72	6.8	3.2	2.34
		27	16	8.1	8.1	2.34	7.9	7.9	2.50	7.6	7.6	2.69	7.2	7.2	2.67	6.3	6.3	2.28
			19	8.5	6.5	2.42	8.3	6.5	2.59	8.0	6.3	2.75	7.5	6.0	2.70	6.6	5.8	2.31
			22	9.0	4.8	2.53	8.7	4.7	2.68	8.3	4.6	2.83	7.8	4.4	2.72	6.8	4.1	2.34
		29	16	8.1	8.1	2.34	7.9	7.9	2.50	7.6	7.6	2.69	7.2	7.2	2.67	6.3	6.3	2.28
			19	8.5	7.5	2.42	8.3	7.4	2.59	8.0	7.2	2.75	7.5	7.1	2.70	6.6	6.6	2.31
			22	9.0	5.9	2.53	8.7	5.6	2.68	8.3	5.5	2.83	7.8	5.4	2.72	6.8	5.1	2.34
		32	16	8.1	8.1	2.34	7.9	7.9	2.50	7.6	7.6	2.69	7.2	7.2	2.67	6.3	6.3	2.28
			19	8.5	7.5	2.42	8.3	7.4	2.59	8.0	7.2	2.75	7.5	7.1	2.70	6.6	6.6	2.31
			22	9.0	5.9	2.53	8.7	5.6	2.68	8.3	5.5	2.83	7.8	5.4	2.72	6.8	5.1	2.34
S-100PN1E5A U-100PE1E5A (U-100PE1E8A)	220V 230V 240V 50Hz 1 phase (3 phase)	23	16	11.4	9.2	3.08	11.4	9.2	3.31	10.9	8.9	3.52	10.2	8.7	3.67	7.4	7.4	3.00
			19	12.1	6.8	3.22	12.1	6.8	3.46	11.7	6.7	3.68	10.9	6.4	3.82	7.9	5.1	3.12
			22	13.3	4.6	3.33	13.3	4.6	3.57	12.8	4.4	3.80	11.9	4.1	3.96	8.7	3.0	3.23
		25	16	11.8	11.0	3.14	11.8	11.0	3.37	11.3	10.6	3.58	10.5	10.4	3.73	7.7	7.7	3.05
			19	12.6	8.5	3.27	12.6	8.5	3.51	12.1	8.3	3.74	11.2	8.1	3.89	8.2	6.8	3.18
			22	13.8	6.3	3.38	13.8	6.3	3.64	13.2	6.0	3.87	12.3	5.7	4.02	9.0	4.6	3.29
		27	16	12.2	12.2	3.19	12.2	12.2	3.42	11.7	11.7	3.64	10.9	10.9	3.79	8.0	8.0	3.10
			19	13.0	10.5	3.33	13.0	10.5	3.57	12.5	10.1	3.80	11.6	9.9	3.95	8.5	8.5	3.23
			22	14.2	8.1	3.44	14.2	8.1	3.70	13.7	7.8	3.93	12.7	7.5	4.09	9.3	6.2	3.34
		29	16	12.4	12.4	3.20	12.4	12.4	3.43	11.9	11.9	3.65	11.0	11.0	3.80	8.1	8.1	3.10
			19	13.2	12.2	3.33	13.2	12.2	3.58	12.7	11.8	3.81	11.8	11.7	3.96	8.6	8.6	3.24
			22	14.5	9.8	3.45	14.5	9.8	3.70	13.9	9.5	3.94	12.9	9.2	4.10	9.5	7.9	3.35
		32	16	12.5	12.5	3.20	12.5	12.5	3.44	12.1	12.1	3.66	11.2	11.2	3.81	8.2	8.2	3.11
			19	13.4	12.3	3.34	13.4	12.3	3.59	12.9	12.0	3.82	12.0	11.9	3.97	8.8	8.8	3.25
			22	14.7	9.9	3.46	14.7	9.9	3.71	14.1	9.7	3.95	13.1	9.4	4.11	9.6	8.0	3.36
S-125PN1E5A U-125PE1E5A (U-125PE1E8A)	220V 230V 240V 50Hz 1 phase (3 phase)	23	16	12.7	9.7	3.90	12.7	9.7	4.18	12.2	9.4	4.45	11.4	9.2	4.63	8.3	7.7	3.78
			19	13.6	7.4	4.06	13.6	7.4	4.36	13.1	7.1	4.64	12.2	6.9	4.83	8.9	5.5	3.95
			22	14.9	5.1	4.20	14.9	5.2	4.52	14.3	4.9	4.80	13.3	4.6	5.00	9.7	3.3	4.08
		25	16	13.2	11.5	3.96	13.2	11.6	4.26	12.7	11.2	4.53	11.8	11.0	4.71	8.6	8.6	3.85
			19	14.1	9.1	4.13	14.1	9.2	4.44	13.5	8.9	4.72	12.6	8.6	4.91	9.2	7.1	4.01
			22	15.4	6.8	4.27	15.4	6.8	4.59	14.8	6.6	4.88	13.8	6.3	5.08	10.1	5.0	4.15
		27	16	13.6	13.4	4.03	13.6	13.5	4.33	13.1	13.1	4.60	12.2	12.2	4.79	8.9	8.9	3.91
			19	14.6	11.1	4.20	14.6	11.0	4.51	14.0	10.6	4.80	13.0	10.4	4.99	9.5	8.8	4.08
			22	16.0	8.7	4.35	16.0	8.7	4.67	15.3	8.4	4.97	14.3	8.1	5.16	10.4	6.6	4.22
		29	16	13.8	13.8	4.04	13.8	13.8	4.34	13.3	13.3	4.61	12.4	12.4	4.80	9.0	9.0	3.92
			19	14.8	12.7	4.21	14.8	12.7	4.52	14.2	12.4	4.81	13.2	12.1	5.00	9.7	9.7	4.09
			22	16.2	10.4	4.36	16.2	10.4	4.68	15.6	10.1	4.98	14.5	9.7	5.18	10.6	8.3	4.23
		32	16	14.0	14.0	4.05	14.0	14.0	4.35	13.5	13.5	4.62	12.6	12.6	4.81	9.2	9.2	3.93
			19	15.0	12.9	4.22	15.0	12.9	4.53	14.4	12.6	4.82	13.4	12.3	5.02	9.8	9.8	4.10
			22	16.4	10.5	4.37	16.4	10.5	4.69	15.8	10.3	4.99	14.7	9.9	5.19	10.7	8.3	4.24
S-140PN1E5A U-140PE1E5A (U-140PE1E8A)	220V 230V 240V 50Hz 1 phase (3 phase)	23	16	14.1	10.4	5.03	14.1	10.5	5.40	13.6	10.1	5.75	12.6	9.8	5.98	9.2	8.3	4.89
			19	15.1	8.0	5.25	15.1	8.1	5.64	14.5	7.8	6.00	13.5	7.4	6.24	9.8	5.9	5.10
			22	16.5	5.7	5.43	16.5	5.6	5.83	15.9	5.5	6.21	14.8	5.1	6.45	10.8	3.7	5.27
		25	16	14.6	12.3	5.12	14.6	12.4	5.50	14.0	11.9	5.85	13.1	11.7	6.08	9.5	9.5	4.97
			19	15.6	9.8	5.34	15.6	9.9	5.73	15.0	9.5	6.10	13.9	9.2	6.34	10.2	7.6	5.18
			22	17.1	7.4	5.52	17.1	7.5	5.93	16.4	7.1	6.31	15.3	6.8	6.56	11.2	5.4	5.36
		27	16	15.1	14.2	5.20	15.1	14.3	5.59	14.5	13.9	5.94	13.5	13.5	6.18	9.9	9.9	5.05
			19	16.1	11.7	5.43	16.1	11.8	5.83	15.5	11.4	6.20	14.4	11.1	6.45	10.5	9.3	5.27
			22	17.7	9.3	5.61	17.7	9.4	6.03	17.0	9.0	6.41	15.8	8.7	6.67	11.5	7.0	5.45
		29	16	15.3	15.3	5.21	15.3	15.3	5.60	14.7	14.7	5.96	13.7	13.7	6.20	10.0	10.0	5.06
			19	16.4	13.5	5.44	16.4	13.5	5.84	15.7	13.1	6.22	14.6	12.9	6.46	10.7	10.7	5.28
			22	17.9	11.1	5.63	17.9	11.2	6.04	17.2	10.8	6.43	16.0	10.5	6.69	11.7	8.7	5.47
		32	16	15.5	15.5	5.23	15.5	15.5	5.61	14.9	14.9	5.97	13.9	13.9	6.21	10.2	10.2	5.08
			19	16.6	13.7	5.45	16.6	13.7	5.86	16.0	13.4	6.23	14.8	13.0	6.48	10.9	10.9	5.30
			22	18.2	11.3	5.64	18.2	11.4	6.06	17.5	11.0	6.45	16.3	10.7	6.70	11.9	8.9	5.48

1-13. Capacity Table

1. Cooling Capacity Performance Data

□Combination of Multiple Unit

Ducted Type

TC :Cooling Capacity
SHC :Sensible Heat Capacity
IPT :Cooling Power Consumption

unit : kW

Model	Power Source	Ambient Return Air		Outdoor air intake temp(℃ D.B.)														
				25℃			30℃			35℃			40℃			46℃		
		DB	WB	TC	SHC	IPT	TC	SHC	IPT	TC	SHC	IPT	TC	SHC	IPT	TC	SHC	IPT
S-36PN1E5A×2 U-71PE1E5A (U-71PE1E8A)	220V 230V 240V 50Hz 1 phase (3 phase)	23	16	8.1	7.0	2.34	7.9	6.9	2.50	7.6	6.7	2.69	7.2	6.5	2.67	6.3	6.2	2.28
			19	8.5	5.0	2.42	8.3	4.9	2.59	8.0	4.7	2.75	7.5	4.6	2.70	6.6	4.2	2.31
			22	9.0	2.9	2.53	8.7	2.8	2.68	8.3	2.7	2.83	7.8	2.6	2.72	6.8	2.3	2.34
		25	16	8.1	8.1	2.34	7.9	7.9	2.50	7.6	7.6	2.69	7.2	7.2	2.67	6.3	6.3	2.28
			19	8.5	6.1	2.42	8.3	6.0	2.59	8.0	6.0	2.75	7.5	5.7	2.70	6.6	5.5	2.31
			22	9.0	4.2	2.53	8.7	4.1	2.68	8.3	3.9	2.83	7.8	3.7	2.72	6.8	3.4	2.34
		27	16	8.1	8.1	2.34	7.9	7.9	2.50	7.6	7.6	2.69	7.2	7.2	2.67	6.3	6.3	2.28
			19	8.5	7.3	2.42	8.3	7.3	2.59	8.0	7.1	2.75	7.5	6.8	2.70	6.6	6.6	2.31
			22	9.0	5.3	2.53	8.7	5.2	2.68	8.3	5.0	2.83	7.8	4.9	2.72	6.8	4.6	2.34
		29	16	8.1	8.1	2.34	7.9	7.9	2.50	7.6	7.6	2.69	7.2	7.2	2.67	6.3	6.3	2.28
			19	8.5	8.5	2.42	8.3	8.3	2.59	8.0	8.0	2.75	7.5	7.5	2.70	6.6	6.6	2.31
			22	9.0	6.5	2.53	8.7	6.4	2.68	8.3	6.3	2.83	7.8	6.1	2.72	6.8	5.8	2.34
		32	16	8.1	8.1	2.34	7.9	7.9	2.50	7.6	7.6	2.69	7.2	7.2	2.67	6.3	6.3	2.28
			19	8.5	8.5	2.42	8.3	8.3	2.59	8.0	8.0	2.75	7.5	7.5	2.70	6.6	6.6	2.31
			22	9.0	6.5	2.53	8.7	6.4	2.68	8.3	6.3	2.83	7.8	6.1	2.72	6.8	5.8	2.34
S-36PN1E5A×3 U-100PE1E5A (U-100PE1E8A)	220V 230V 240V 50Hz 1 phase (3 phase)	23	16	11.4	10.2	3.08	11.4	10.2	3.31	10.9	9.9	3.52	10.2	9.8	3.67	7.4	7.4	3.00
			19	12.1	7.4	3.22	12.1	7.2	3.46	11.7	7.1	3.68	10.9	6.9	3.82	7.9	5.7	3.12
			22	13.3	4.4	3.33	13.3	4.4	3.57	12.8	4.3	3.80	11.9	3.9	3.96	8.7	2.9	3.23
		25	16	11.8	11.8	3.14	11.8	11.8	3.37	11.3	11.3	3.58	10.5	10.5	3.73	7.7	7.7	3.05
			19	12.6	9.5	3.27	12.6	9.5	3.51	12.1	9.2	3.74	11.2	9.0	3.89	8.2	7.7	3.18
			22	13.8	6.6	3.38	13.8	6.6	3.64	13.2	6.3	3.87	12.3	6.1	4.02	9.0	4.9	3.29
		27	16	12.2	12.2	3.19	12.2	12.2	3.42	11.7	11.7	3.64	10.9	10.9	3.79	8.0	8.0	3.10
			19	13.0	11.7	3.33	13.0	11.7	3.57	12.5	11.5	3.80	11.6	11.3	3.95	8.5	8.5	3.23
			22	14.2	8.9	3.44	14.2	8.9	3.70	13.7	8.6	3.93	12.7	8.4	4.09	9.3	7.0	3.34
		29	16	12.4	12.4	3.20	12.4	12.4	3.43	11.9	11.9	3.65	11.0	11.0	3.80	8.1	8.1	3.10
			19	13.2	13.2	3.33	13.2	13.2	3.58	12.7	12.7	3.81	11.8	11.8	3.96	8.6	8.6	3.24
			22	14.5	11.1	3.45	14.5	11.1	3.70	13.9	10.7	3.94	12.9	10.6	4.10	9.5	9.1	3.35
		32	16	12.5	12.5	3.20	12.5	12.5	3.44	12.1	12.1	3.66	11.2	11.2	3.81	8.2	8.2	3.11
			19	13.4	13.4	3.34	13.4	13.4	3.59	12.9	12.9	3.82	12.0	12.0	3.97	8.8	8.8	3.25
			22	14.7	11.3	3.46	14.7	11.3	3.71	14.1	10.9	3.95	13.1	10.8	4.11	9.6	9.2	3.36
S-50PN1E5A×2 U-100PE1E5A (U-100PE1E8A)	220V 230V 240V 50Hz 1 phase (3 phase)	23	16	11.4	9.0	3.08	11.4	9.1	3.31	10.9	8.6	3.52	10.2	8.5	3.67	7.4	7.3	3.00
			19	12.1	6.6	3.22	12.1	6.6	3.46	11.7	6.4	3.68	10.9	6.2	3.82	7.9	5.0	3.12
			22	13.3	4.5	3.33	13.3	4.5	3.57	12.8	4.3	3.80	11.9	3.9	3.96	8.7	2.9	3.23
		25	16	11.8	10.8	3.14	11.8	10.8	3.37	11.3	10.5	3.58	10.5	10.3	3.73	7.7	7.7	3.05
			19	12.6	8.4	3.27	12.6	8.4	3.51	12.1	8.1	3.74	11.2	8.0	3.89	8.2	6.6	3.18
			22	13.8	6.1	3.38	13.8	6.1	3.64	13.2	5.9	3.87	12.3	5.6	4.02	9.0	4.4	3.29
		27	16	12.2	12.2	3.19	12.2	12.2	3.42	11.7	11.7	3.64	10.9	10.9	3.79	8.0	8.0	3.10
			19	13.0	10.2	3.33	13.0	10.2	3.57	12.5	9.9	3.80	11.6	9.7	3.95	8.5	8.4	3.23
			22	14.2	7.8	3.44	14.2	7.8	3.70	13.7	7.7	3.93	12.7	7.4	4.09	9.3	6.1	3.34
		29	16	12.4	12.4	3.20	12.4	12.4	3.43	11.9	11.9	3.65	11.0	11.0	3.80	8.1	8.1	3.10
			19	13.2	11.9	3.33	13.2	11.9	3.58	12.7	11.7	3.81	11.8	11.5	3.96	8.6	8.6	3.24
			22	14.5	9.6	3.45	14.5	9.6	3.70	13.9	9.4	3.94	12.9	9.1	4.10	9.5	7.7	3.35
		32	16	12.5	12.5	3.20	12.5	12.5	3.44	12.1	12.1	3.66	11.2	11.2	3.81	8.2	8.2	3.11
			19	13.4	12.1	3.34	13.4	12.1	3.59	12.9	11.9	3.82	12.0	11.7	3.97	8.8	8.8	3.25
			22	14.7	9.8	3.46	14.7	9.8	3.71	14.1	9.5	3.95	13.1	9.2	4.11	9.6	7.8	3.36
S-36PN1E5A×4 U-125PE1E5A (U-125PE1E8A)	220V 230V 240V 50Hz 1 phase (3 phase)	23	16	12.7	11.8	3.90	12.7	11.9	4.18	12.2	11.5	4.45	11.4	11.4	4.63	8.3	8.3	3.78
			19	13.6	8.4	4.06	13.6	8.5	4.36	13.1	8.2	4.64	12.2	7.9	4.83	8.9	6.6	3.95
			22	14.9	4.9	4.20	14.9	4.9	4.52	14.3	4.7	4.80	13.3	4.4	5.00	9.7	3.3	4.08
		25	16	13.2	13.2	3.96	13.2	13.2	4.26	12.7	12.7	4.53	11.8	11.8	4.71	8.6	8.6	3.85
			19	14.1	11.0	4.13	14.1	11.0	4.44	13.5	10.7	4.72	12.6	10.5	4.91	9.2	9.1	4.01
			22	15.4	7.5	4.27	15.4	7.5	4.59	14.8	7.2	4.88	13.8	7.0	5.08	10.1	5.7	4.15
		27	16	13.6	13.6	4.03	13.6	13.6	4.33	13.1	13.1	4.60	12.2	12.2	4.79	8.9	8.9	3.91
			19	14.6	13.7	4.20	14.6	13.8	4.51	14.0	13.3	4.80	13.0	13.0	4.99	9.5	9.5	4.08
			22	16.0	10.3	4.35	16.0	10.2	4.67	15.3	9.9	4.97	14.3	9.6	5.16	10.4	8.2	4.22
		29	16	13.8	13.8	4.04	13.8	13.8	4.34	13.3	13.3	4.61	12.4	12.4	4.80	9.0	9.0	3.92
			19	14.8	14.8	4.21	14.8	14.8	4.52	14.2	14.2	4.81	13.2	13.2	5.00	9.7	9.7	4.09
			22	16.2	12.9	4.36	16.2	12.9	4.68	15.6	12.5	4.98	14.5	12.3	5.18	10.6	10.6	4.23
		32	16	14.0	14.0	4.05	14.0	14.0	4.35	13.5	13.5	4.62	12.6	12.6	4.81	9.2	9.2	3.93
			19	15.0	15.0	4.22	15.0	15.0	4.53	14.4	14.4	4.82	13.4	13.4	5.02	9.8	9.8	4.10
			22	16.4	13.1	4.37	16.4	13.1	4.69	15.8	12.7	4.99	14.7	12.5	5.19	10.7	10.7	4.24
S-45PN1E5A×3 U-125PE1E5A (U-125PE1E8A)	220V 230V 240V 50Hz 1 phase (3 phase)	23	16	12.7	10.8	3.90	12.7	10.9	4.18	12.2	10.6	4.45	11.4	10.5	4.63	8.3	8.3	3.78
			19	13.6	8.0	4.06	13.6	7.9	4.36	13.1	7.7	4.64	12.2	7.4	4.83	8.9	6.1	3.95
			22	14.9	4.9	4.20	14.9	4.9	4.52	14.3	4.7	4.80	13.3	4.4	5.00	9.7	3.2	4.08
		25	16	13.2	13.2	3.96	13.2	13.2	4.26	12.7	12.7	4.53	11.8	11.8	4.71	8.6	8.6	3.85
			19	14.1	10.1	4.13	14.1	10.2	4.44	13.5	9.8	4.72	12.6	9.7	4.91	9.2	8.3	4.01
			22	15.4	7.1	4.27	15.4	7.2	4.59	14.8	6.9	4.88	13.8	6.6	5.08	10.1	5.3	4.15
		27	16	13.6	13.6	4.03	13.6	13.6	4.33	13.1	13.1	4.60	12.2	12.2	4.79	8.9	8.9	3.91
			19	14.6	12.5	4.20	14.6	12.6	4.51	14.0	12.2	4.80	13.0	12.0	4.99	9.5	9.5	4.08
			22	16.0	9.6	4.35	16.0	9.6	4.67	15.3	9.2	4.97	14.3	9.0	5.16	10.4	7.4	4.22
		29	16	13.8	13.8	4.04	13.8	13.8	4.34	13.3	13.3	4.61	12.4	12.4	4.80	9.0	9.0	3.92
			19	14.8	14.8	4.21	14.8	14.8	4.52	14.2	14.2	4.81	13.2	13.2	5.00	9.7	9.7	4.09
			22	16.2	11.7	4.36	16.2	11.8	4.68	15.6	11.6	4.98	14.5	11.2	5.18	10.6	9.7	4.23
		32	16	14.0	14.0	4.05	14.0	14.0	4.35	13.5	13.5	4.62	12.6	12.6	4.81	9.2	9.2	3.93
			19	15.0	15.0	4.22	15.0	15.0	4.53	14.4	14.4	4.82	13.4	13.4	5.02	9.8	9.8	4.10
			22	16.4	11.9	4.37	16.4	12.0	4.69	15.8	11.7	4.99	14.7	11.4	5.19	10.7	9.8	4.24

1-13. Capacity Table

1. Cooling Capacity Performance Data

□Combination of Multiple Unit

Ducted Type

TC :Cooling Capacity
SHC :Sensible Heat Capacity
IPT :Cooling Power Consumption

unit : kW

Model	Power Source	Ambient Return Air		Outdoor air intake temp(□C D.B.)														
				25□C			30□C			35□C			40□C			46□C		
		DB	WB	TC	SHC	IPT	TC	SHC	IPT	TC	SHC	IPT	TC	SHC	IPT	TC	SHC	IPT
S-60PN1E5A×2 U-125PE1E5A (U-125PE1E8A)	220V 230V 240V 50Hz 1 phase (3 phase)	23	16	12.7	10.4	3.90	12.7	10.5	4.18	12.2	10.2	4.45	11.4	10.0	4.63	8.3	8.3	3.78
			19	13.6	7.7	4.06	13.6	7.7	4.36	13.1	7.4	4.64	12.2	7.2	4.83	8.9	5.9	3.95
			22	14.9	4.9	4.20	14.9	4.9	4.52	14.3	4.7	4.80	13.3	4.4	5.00	9.7	3.2	4.08
		25	16	13.2	12.7	3.96	13.2	12.8	4.26	12.7	12.4	4.53	11.8	11.8	4.71	8.6	8.6	3.85
			19	14.1	9.8	4.13	14.1	9.8	4.44	13.5	9.5	4.72	12.6	9.3	4.91	9.2	7.8	4.01
			22	15.4	7.0	4.27	15.4	6.9	4.59	14.8	6.8	4.88	13.8	6.5	5.08	10.1	5.1	4.15
		27	16	13.6	13.6	4.03	13.6	13.6	4.33	13.1	13.1	4.60	12.2	12.2	4.79	8.9	8.9	3.91
			19	14.6	12.0	4.20	14.6	12.1	4.51	14.0	11.6	4.80	13.0	11.5	4.99	9.5	9.5	4.08
			22	16.0	9.2	4.35	16.0	9.3	4.67	15.3	8.9	4.97	14.3	8.7	5.16	10.4	7.1	4.22
		29	16	13.8	13.8	4.04	13.8	13.8	4.34	13.3	13.3	4.61	12.4	12.4	4.80	9.0	9.0	3.92
			19	14.8	14.1	4.21	14.8	14.1	4.52	14.2	13.6	4.81	13.2	13.2	5.00	9.7	9.7	4.09
			22	16.2	11.2	4.36	16.2	11.3	4.68	15.6	11.0	4.98	14.5	10.7	5.18	10.6	9.2	4.23
		32	16	14.0	14.0	4.05	14.0	14.0	4.35	13.5	13.5	4.62	12.6	12.6	4.81	9.2	9.2	3.93
			19	15.0	14.3	4.22	15.0	14.3	4.53	14.4	13.8	4.82	13.4	13.4	5.02	9.8	9.8	4.10
			22	16.4	11.4	4.37	16.4	11.5	4.69	15.8	11.1	4.99	14.7	10.9	5.19	10.7	9.3	4.24
S-50PN1E5A×3 U-140PE1E5A (U-140PE1E8A)	220V 230V 240V 50Hz 1 phase (3 phase)	23	16	14.1	11.4	5.03	14.1	11.5	5.40	13.6	11.2	5.75	12.6	10.9	5.98	9.2	9.2	4.89
			19	15.1	8.4	5.25	15.1	8.5	5.64	14.5	8.2	6.00	13.5	7.9	6.24	9.8	6.4	5.10
			22	16.5	5.5	5.43	16.5	5.4	5.83	15.9	5.3	6.21	14.8	4.9	6.45	10.8	3.6	5.27
		25	16	14.6	13.8	5.12	14.6	13.9	5.50	14.0	13.5	5.85	13.1	13.1	6.08	9.5	9.5	4.97
			19	15.6	10.7	5.34	15.6	10.8	5.73	15.0	10.4	6.10	13.9	10.1	6.34	10.2	8.6	5.18
			22	17.1	7.8	5.52	17.1	7.7	5.93	16.4	7.5	6.31	15.3	7.1	6.56	11.2	5.7	5.36
		27	16	15.1	15.1	5.20	15.1	15.1	5.59	14.5	14.5	5.94	13.5	13.5	6.18	9.9	9.9	5.05
			19	16.1	13.1	5.43	16.1	13.2	5.83	15.5	12.7	6.20	14.4	12.6	6.45	10.5	10.5	5.27
			22	17.7	10.0	5.61	17.7	10.1	6.03	17.0	9.7	6.41	15.8	9.5	6.67	11.5	7.8	5.45
		29	16	15.3	15.3	5.21	15.3	15.3	5.60	14.7	14.7	5.96	13.7	13.7	6.20	10.0	10.0	5.06
			19	16.4	15.4	5.44	16.4	15.5	5.84	15.7	14.9	6.22	14.6	14.6	6.46	10.7	10.7	5.28
			22	17.9	12.3	5.63	17.9	12.4	6.04	17.2	11.9	6.43	16.0	11.7	6.69	11.7	10.0	5.47
		32	16	15.5	15.5	5.23	15.5	15.5	5.61	14.9	14.9	5.97	13.9	13.9	6.21	10.2	10.2	5.08
			19	16.6	15.6	5.45	16.6	15.7	5.86	16.0	15.2	6.23	14.8	14.8	6.48	10.9	10.9	5.30
			22	18.2	12.5	5.64	18.2	12.6	6.06	17.5	12.1	6.45	16.3	11.9	6.70	11.9	10.2	5.48
S-71PN1E5A×2 U-140PE1E5A (U-140PE1E8A)	220V 230V 240V 50Hz 1 phase (3 phase)	23	16	14.1	11.0	5.03	14.1	11.0	5.40	13.6	10.8	5.75	12.6	10.4	5.98	9.2	8.9	4.89
			19	15.1	8.2	5.25	15.1	8.3	5.64	14.5	8.0	6.00	13.5	7.7	6.24	9.8	6.2	5.10
			22	16.5	5.5	5.43	16.5	5.5	5.83	15.9	5.3	6.21	14.8	4.9	6.45	10.8	3.6	5.27
		25	16	14.6	13.2	5.12	14.6	13.2	5.50	14.0	12.9	5.85	13.1	12.7	6.08	9.5	9.5	4.97
			19	15.6	10.4	5.34	15.6	10.4	5.73	15.0	10.1	6.10	13.9	9.7	6.34	10.2	8.2	5.18
			22	17.1	7.5	5.52	17.1	7.6	5.93	16.4	7.3	6.31	15.3	6.9	6.56	11.2	5.5	5.36
		27	16	15.1	15.1	5.20	15.1	15.1	5.59	14.5	14.5	5.94	13.5	13.5	6.18	9.9	9.9	5.05
			19	16.1	12.5	5.43	16.1	12.6	5.83	15.5	12.2	6.20	14.4	12.0	6.45	10.5	10.3	5.27
			22	17.7	9.8	5.61	17.7	9.7	6.03	17.0	9.5	6.41	15.8	9.1	6.67	11.5	7.4	5.45
		29	16	15.3	15.3	5.21	15.3	15.3	5.60	14.7	14.7	5.96	13.7	13.7	6.20	10.0	10.0	5.06
			19	16.4	14.7	5.44	16.4	14.8	5.84	15.7	14.2	6.22	14.6	14.0	6.46	10.7	10.7	5.28
			22	17.9	11.8	5.63	17.9	11.9	6.04	17.2	11.5	6.43	16.0	11.2	6.69	11.7	9.4	5.47
		32	16	15.5	15.5	5.23	15.5	15.5	5.61	14.9	14.9	5.97	13.9	13.9	6.21	10.2	10.2	5.08
			19	16.6	14.9	5.45	16.6	15.0	5.86	16.0	14.5	6.23	14.8	14.2	6.48	10.9	10.9	5.30
			22	18.2	12.0	5.64	18.2	12.1	6.06	17.5	11.7	6.45	16.3	11.4	6.70	11.9	9.6	5.48

1-13. Capacity Table

1. Cooling Capacity Performance Data

□Combination of Single Unit

4-Way Cassette Type

TC :Cooling Capacity
SHC :Sensible Heat Capacity
IPT :Cooling Power Consumption

unit : kW

Model	Power Source	Ambient Return Air		Outdoor air intake temp(□C D.B.)														
				25□C			30□C			35□C			40□C			43□C		
		DB	WB	TC	SHC	IPT	TC	SHC	IPT	TC	SHC	IPT	TC	SHC	IPT	TC	SHC	IPT
S-60PU1E5A U-60PEY1E5	220V 230V 240V 50Hz 1 phase	23	16	7.1	5.8	2.02	6.8	5.6	2.21	6.5	5.5	2.40	5.5	4.6	2.11	5.0	4.3	1.92
			19	7.7	4.3	2.10	7.3	4.1	2.30	7.0	4.0	2.50	5.9	3.5	2.20	5.4	3.2	2.00
			22	8.4	2.9	2.18	8.0	2.7	2.39	7.6	2.6	2.60	6.5	2.2	2.29	5.9	2.0	2.08
		25	16	7.1	6.7	2.02	6.8	6.5	2.21	6.5	6.3	2.40	5.5	5.4	2.11	5.0	5.0	1.92
			19	7.7	5.3	2.10	7.3	5.1	2.30	7.0	4.9	2.50	5.9	4.2	2.20	5.4	3.9	2.00
			22	8.4	3.8	2.18	8.0	3.7	2.39	7.6	3.6	2.60	6.5	3.0	2.29	5.9	2.8	2.08
		27	16	7.1	7.1	2.02	6.8	6.8	2.21	6.5	6.5	2.40	5.5	5.5	2.11	5.0	5.0	1.92
			19	7.7	6.1	2.10	7.3	6.0	2.30	7.0	5.8	2.50	5.9	5.0	2.20	5.4	4.6	2.00
			22	8.4	4.8	2.18	8.0	4.6	2.39	7.6	4.4	2.60	6.5	3.8	2.29	5.9	3.5	2.08
		29	16	7.1	7.1	2.02	6.8	6.8	2.21	6.5	6.5	2.40	5.5	5.5	2.11	5.0	5.0	1.92
			19	7.7	7.1	2.10	7.3	6.8	2.30	7.0	6.8	2.50	5.9	5.8	2.20	5.4	5.4	2.00
			22	8.4	5.8	2.18	8.0	5.5	2.39	7.6	5.4	2.60	6.5	4.7	2.29	5.9	4.3	2.08
		32	16	7.1	7.1	2.02	6.8	6.8	2.21	6.5	6.5	2.40	5.5	5.5	2.11	5.0	5.0	1.92
			19	7.7	7.1	2.10	7.3	6.8	2.30	7.0	6.8	2.50	5.9	5.8	2.20	5.4	5.4	2.00
			22	8.4	5.8	2.18	8.0	5.5	2.39	7.6	5.4	2.60	6.5	4.7	2.29	5.9	4.3	2.08
S-71PU1E5A U-71PEY1E5	220V 230V 240V 50Hz 1 phase	23	16	7.9	6.0	2.26	7.5	5.8	2.47	7.2	5.7	2.69	6.1	5.0	2.36	5.5	4.6	2.15
			19	8.5	4.6	2.35	8.1	4.4	2.58	7.7	4.2	2.80	6.5	3.7	2.46	5.9	3.4	2.24
			22	9.2	3.1	2.45	8.8	3.0	2.68	8.4	2.8	2.91	7.1	2.4	2.56	6.4	2.1	2.33
		25	16	7.9	7.0	2.26	7.5	6.8	2.47	7.2	6.6	2.69	6.1	5.7	2.36	5.5	5.3	2.15
			19	8.5	5.6	2.35	8.1	5.3	2.58	7.7	5.2	2.80	6.5	4.5	2.46	5.9	4.2	2.24
			22	9.2	4.0	2.45	8.8	3.9	2.68	8.4	3.7	2.91	7.1	3.2	2.56	6.4	2.9	2.33
		27	16	7.9	7.9	2.26	7.5	7.5	2.47	7.2	7.2	2.69	6.1	6.1	2.36	5.5	5.5	2.15
			19	8.5	6.5	2.35	8.1	6.2	2.58	7.7	6.0	2.80	6.5	5.2	2.46	5.9	4.9	2.24
			22	9.2	4.9	2.45	8.8	4.8	2.68	8.4	4.7	2.91	7.1	4.0	2.56	6.4	3.7	2.33
		29	16	7.9	7.9	2.26	7.5	7.5	2.47	7.2	7.2	2.69	6.1	6.1	2.36	5.5	5.5	2.15
			19	8.5	7.4	2.35	8.1	7.1	2.58	7.7	6.9	2.80	6.5	6.0	2.46	5.9	5.7	2.24
			22	9.2	5.9	2.45	8.8	5.7	2.68	8.4	5.6	2.91	7.1	4.8	2.56	6.4	4.6	2.33
		32	16	7.9	7.9	2.26	7.5	7.5	2.47	7.2	7.2	2.69	6.1	6.1	2.36	5.5	5.5	2.15
			19	8.5	7.4	2.35	8.1	7.1	2.58	7.7	6.9	2.80	6.5	6.0	2.46	5.9	5.7	2.24
			22	9.2	5.9	2.45	8.8	5.7	2.68	8.4	5.6	2.91	7.1	4.8	2.56	6.4	4.6	2.33

1-13. Capacity Table

1. Cooling Capacity Performance Data

□Combination of Single Unit

4-Way Cassette Type

TC :Cooling Capacity
SHC :Sensible Heat Capacity
IPT :Cooling Power Consumption

unit : kW

Model	Power Source	Ambient Return Air		Outdoor air intake temp(□C D.B.)														
				25□C			30□C			35□C			40□C			43□C		
		DB	WB	TC	SHC	IPT	TC	SHC	IPT	TC	SHC	IPT	TC	SHC	IPT	TC	SHC	IPT
S-100PU1E5A U-100PEY1E5 (U-100PEY1E8)	220V 230V 240V 50Hz 1phase (3phase)	23	16	11.1	8.8	3.37	10.6	8.4	3.63	10.1	8.2	3.90	8.5	7.2	3.70	6.1	5.6	2.55
			19	11.9	6.7	3.52	11.3	6.3	3.79	10.7	6.0	4.06	9.1	5.3	3.86	6.5	4.0	2.66
			22	13.0	4.4	3.64	12.4	4.2	3.92	11.8	4.0	4.20	10.0	3.4	3.99	7.2	2.4	2.75
		25	16	11.5	10.7	3.43	11.0	10.2	3.70	10.4	9.8	3.96	8.8	8.7	3.76	6.3	6.3	2.59
			19	12.3	8.3	3.58	11.7	7.9	3.85	11.1	7.5	4.13	9.4	6.8	3.93	6.8	5.3	2.71
			22	13.5	6.1	3.70	12.8	5.7	3.99	12.2	5.6	4.27	10.3	4.8	4.06	7.4	3.6	2.80
		27	16	11.9	11.9	3.49	11.3	11.3	3.76	10.8	10.8	4.03	9.1	9.1	3.83	6.6	6.6	2.64
			19	12.7	10.1	3.64	12.1	9.6	3.92	11.5	9.2	4.20	9.8	8.4	3.99	7.0	6.5	2.75
			22	13.9	7.8	3.76	13.3	7.5	4.05	12.6	7.2	4.35	10.7	6.3	4.13	7.7	4.9	2.85
		29	16	12.1	12.1	3.50	11.5	11.5	3.77	10.9	10.9	4.04	9.3	9.3	3.84	6.7	6.7	2.64
			19	12.9	11.9	3.65	12.3	11.3	3.93	11.7	10.9	4.21	9.9	9.8	4.00	7.1	7.1	2.76
			22	14.1	9.5	3.77	13.5	9.1	4.06	12.8	8.8	4.36	10.9	7.8	4.14	7.8	6.1	2.85
		32	16	12.3	12.3	3.50	11.7	11.7	3.78	11.1	11.1	4.05	9.4	9.4	3.84	6.8	6.8	2.65
			19	13.1	12.1	3.65	12.5	11.5	3.94	11.8	11.0	4.22	10.1	10.0	4.01	7.2	7.2	2.76
			22	14.3	9.6	3.78	13.7	9.2	4.07	13.0	8.9	4.37	11.0	7.9	4.15	7.9	6.1	2.86
S-125PU1E5A U-125PEY1E5 (U-125PEY1E8)	220V 230V 240V 50Hz 1phase (3phase)	23	16	12.5	9.3	4.02	12.2	9.2	4.33	11.8	8.9	4.64	9.5	7.5	4.41	7.2	6.1	3.04
			19	13.4	7.2	4.19	13.0	7.0	4.51	12.6	6.8	4.84	10.2	5.7	4.60	7.7	4.5	3.17
			22	14.7	5.0	4.33	14.3	4.8	4.67	13.8	4.7	5.00	11.1	3.7	4.75	8.4	2.8	3.28
		25	16	13.0	11.1	4.08	12.6	10.8	4.40	12.2	10.6	4.72	9.9	9.0	4.48	7.4	7.1	3.09
			19	13.8	8.7	4.26	13.5	8.6	4.59	13.1	8.4	4.92	10.5	7.0	4.67	8.0	5.7	3.22
			22	15.2	6.7	4.41	14.8	6.5	4.75	14.3	6.3	5.09	11.5	5.1	4.84	8.7	4.0	3.33
		27	16	13.4	13.0	4.15	13.0	12.6	4.47	12.6	12.3	4.79	10.2	10.2	4.55	7.7	7.7	3.14
			19	14.3	10.5	4.33	13.9	10.3	4.66	13.5	10.0	5.00	10.9	8.5	4.75	8.2	6.9	3.27
			22	15.7	8.3	4.48	15.3	8.2	4.83	14.8	7.9	5.17	11.9	6.6	4.92	9.0	5.3	3.39
		29	16	13.6	13.6	4.16	13.2	13.2	4.48	12.8	12.8	4.81	10.3	10.3	4.57	7.8	7.8	3.15
			19	14.5	12.2	4.34	14.1	11.9	4.68	13.7	11.6	5.01	11.1	9.9	4.76	8.3	7.9	3.28
			22	15.9	10.0	4.49	15.5	9.8	4.84	15.0	9.5	5.19	12.1	8.0	4.93	9.1	6.5	3.40
		32	16	13.8	13.8	4.17	13.4	13.4	4.49	13.0	13.0	4.82	10.5	10.5	4.58	7.9	7.9	3.15
			19	14.7	12.4	4.35	14.3	12.0	4.69	13.9	11.8	5.02	11.2	10.0	4.77	8.5	8.0	3.29
			22	16.2	10.2	4.50	15.7	9.9	4.85	15.2	9.6	5.20	12.3	8.2	4.94	9.3	6.6	3.40
S-140PU1E5A U-140PEY1E8	220V 230V 240V 50Hz 3phase	23	16	14.1	10.2	4.87	14.1	10.3	5.23	13.6	10.0	5.56	12.6	9.6	5.79	9.2	7.5	4.73
			19	15.1	7.9	5.08	15.1	8.0	5.46	14.5	7.7	5.80	13.5	7.3	6.04	9.8	5.5	4.93
			22	16.5	5.7	5.25	16.5	5.6	5.64	15.9	5.4	6.00	14.8	5.0	6.25	10.8	3.7	5.10
		25	16	14.6	12.1	4.95	14.6	12.0	5.32	14.0	11.7	5.66	13.1	11.5	5.88	9.5	8.9	4.81
			19	15.6	9.7	5.16	15.6	9.7	5.55	15.0	9.3	5.90	13.9	9.0	6.14	10.2	7.0	5.02
			22	17.1	7.4	5.34	17.1	7.3	5.74	16.4	7.1	6.11	15.3	6.8	6.35	11.2	5.1	5.19
		27	16	15.1	13.9	5.03	15.1	14.0	5.41	14.5	13.6	5.75	13.5	13.4	5.98	9.9	9.9	4.89
			19	16.1	11.5	5.25	16.1	11.6	5.64	15.5	11.2	6.00	14.4	10.9	6.24	10.5	8.5	5.10
			22	17.7	9.2	5.43	17.7	9.3	5.83	17.0	8.9	6.21	15.8	8.6	6.46	11.5	6.6	5.28
		29	16	15.3	15.3	5.05	15.3	15.3	5.42	14.7	14.7	5.77	13.7	13.7	6.00	10.0	10.0	4.90
			19	16.4	13.2	5.26	16.4	13.3	5.65	15.7	12.8	6.01	14.6	12.5	6.26	10.7	9.9	5.11
			22	17.9	10.9	5.44	17.9	10.9	5.85	17.2	10.5	6.22	16.0	10.2	6.47	11.7	8.0	5.29
		32	16	15.5	15.5	5.06	15.5	15.5	5.43	14.9	14.9	5.78	13.9	13.9	6.01	10.2	10.2	4.91
			19	16.6	13.3	5.28	16.6	13.4	5.67	16.0	13.0	6.03	14.8	12.7	6.27	10.9	10.1	5.13
			22	18.2	11.0	5.46	18.2	11.1	5.86	17.5	10.7	6.24	16.3	10.4	6.49	11.9	8.1	5.30

1-13. Capacity Table

1. Cooling Capacity Performance Data

□Combination of Multiple Unit

4-Way Cassette Type

TC :Cooling Capacity
SHC :Sensible Heat Capacity
IPT :Cooling Power Consumption

unit : kW

Model	Power Source	Ambient Return Air		Outdoor air intake temp(□C D.B.)														
				25□C			30□C			35□C			40□C			43□C		
		DB	WB	TC	SHC	IPT	TC	SHC	IPT	TC	SHC	IPT	TC	SHC	IPT	TC	SHC	IPT
S-36PU1E5A×2 U-71PEY1E5	220V 230V 240V 50Hz 1phase	23	16	7.9	6.7	2.26	7.5	6.5	2.47	7.2	6.3	2.69	6.1	5.5	2.36	5.5	5.2	2.15
			19	8.5	5.0	2.35	8.1	4.8	2.58	7.7	4.6	2.80	6.5	4.0	2.46	5.9	3.7	2.24
			22	9.2	3.1	2.45	8.8	3.0	2.68	8.4	2.8	2.91	7.1	2.4	2.56	6.4	2.2	2.33
		25	16	7.9	7.9	2.26	7.5	7.5	2.47	7.2	7.2	2.69	6.1	6.1	2.36	5.5	5.5	2.15
			19	8.5	6.1	2.35	8.1	5.9	2.58	7.7	5.7	2.80	6.5	4.9	2.46	5.9	4.7	2.24
			22	9.2	4.3	2.45	8.8	4.1	2.68	8.4	4.0	2.91	7.1	3.5	2.56	6.4	3.2	2.33
		27	16	7.9	7.9	2.26	7.5	7.5	2.47	7.2	7.2	2.69	6.1	6.1	2.36	5.5	5.5	2.15
			19	8.5	7.3	2.35	8.1	7.1	2.58	7.7	6.8	2.80	6.5	5.9	2.46	5.9	5.6	2.24
			22	9.2	5.5	2.45	8.8	5.3	2.68	8.4	5.1	2.91	7.1	4.5	2.56	6.4	4.2	2.33
		29	16	7.9	7.9	2.26	7.5	7.5	2.47	7.2	7.2	2.69	6.1	6.1	2.36	5.5	5.5	2.15
			19	8.5	8.5	2.35	8.1	8.1	2.58	7.7	7.7	2.80	6.5	6.5	2.46	5.9	5.9	2.24
			22	9.2	6.7	2.45	8.8	6.5	2.68	8.4	6.4	2.91	7.1	5.6	2.56	6.4	5.2	2.33
		32	16	7.9	7.9	2.26	7.5	7.5	2.47	7.2	7.2	2.69	6.1	6.1	2.36	5.5	5.5	2.15
			19	8.5	8.5	2.35	8.1	8.1	2.58	7.7	7.7	2.80	6.5	6.5	2.46	5.9	5.9	2.24
			22	9.2	6.7	2.45	8.8	6.5	2.68	8.4	6.4	2.91	7.1	5.6	2.56	6.4	5.2	2.33
S-50PU1E5A×2 U-100PEY1E5 (U-100PEY1E8)	220V 230V 240V 50Hz 1phase (3phase)	23	16	11.1	8.8	3.37	10.6	8.4	3.63	10.1	8.1	3.90	8.5	7.1	3.70	6.1	5.6	2.55
			19	11.9	6.7	3.52	11.3	6.3	3.79	10.7	6.0	4.06	9.1	5.3	3.86	6.5	4.0	2.66
			22	13.0	4.4	3.64	12.4	4.2	3.92	11.8	4.0	4.20	10.0	3.4	3.99	7.2	2.4	2.75
		25	16	11.5	10.4	3.43	11.0	10.0	3.70	10.4	9.5	3.96	8.8	8.6	3.76	6.3	6.2	2.59
			19	12.3	8.2	3.58	11.7	7.8	3.85	11.1	7.5	4.13	9.4	6.7	3.93	6.8	5.2	2.71
			22	13.5	6.1	3.70	12.8	5.7	3.99	12.2	5.5	4.27	10.3	4.8	4.06	7.4	3.5	2.80
		27	16	11.9	11.9	3.49	11.3	11.3	3.76	10.8	10.8	4.03	9.1	9.1	3.83	6.6	6.6	2.64
			19	12.7	10.0	3.64	12.1	9.5	3.92	11.5	9.1	4.20	9.8	8.2	3.99	7.0	6.4	2.75
			22	13.9	7.8	3.76	13.3	7.5	4.05	12.6	7.1	4.35	10.7	6.2	4.13	7.7	4.8	2.85
		29	16	12.1	12.1	3.50	11.5	11.5	3.77	10.9	10.9	4.04	9.3	9.3	3.84	6.7	6.7	2.64
			19	12.9	11.6	3.65	12.3	11.1	3.93	11.7	10.6	4.21	9.9	9.6	4.00	7.1	7.0	2.76
			22	14.1	9.4	3.77	13.5	9.0	4.06	12.8	8.7	4.36	10.9	7.7	4.14	7.8	5.9	2.85
		32	16	12.3	12.3	3.50	11.7	11.7	3.78	11.1	11.1	4.05	9.4	9.4	3.84	6.8	6.8	2.65
			19	13.1	11.8	3.65	12.5	11.3	3.94	11.8	10.7	4.22	10.1	9.8	4.01	7.2	7.1	2.76
			22	14.3	9.5	3.78	13.7	9.1	4.07	13.0	8.8	4.37	11.0	7.8	4.15	7.9	6.0	2.86
S-60PU1E5A×2 U-125PEY1E5 (U-125PEY1E8)	220V 230V 240V 50Hz 1phase (3phase)	23	16	12.5	10.1	4.02	12.2	9.9	4.33	11.8	9.6	4.64	9.5	8.1	4.41	7.2	6.7	3.04
			19	13.4	7.5	4.19	13.0	7.4	4.51	12.6	7.2	4.84	10.2	6.0	4.60	7.7	4.8	3.17
			22	14.7	4.9	4.33	14.3	4.8	4.67	13.8	4.6	5.00	11.1	3.7	4.75	8.4	2.8	3.28
		25	16	13.0	12.2	4.08	12.6	11.8	4.40	12.2	11.5	4.72	9.9	9.9	4.48	7.4	7.4	3.09
			19	13.8	9.5	4.26	13.5	9.2	4.59	13.1	9.0	4.92	10.5	7.5	4.67	8.0	6.2	3.22
			22	15.2	6.9	4.41	14.8	6.7	4.75	14.3	6.5	5.09	11.5	5.4	4.84	8.7	4.2	3.33
		27	16	13.4	13.4	4.15	13.0	13.0	4.47	12.6	12.6	4.79	10.2	10.2	4.55	7.7	7.7	3.14
			19	14.3	11.5	4.33	13.9	11.2	4.66	13.5	11.0	5.00	10.9	9.4	4.75	8.2	7.6	3.27
			22	15.7	8.9	4.48	15.3	8.7	4.83	14.8	8.5	5.17	11.9	7.1	4.92	9.0	5.8	3.39
		29	16	13.6	13.6	4.16	13.2	13.2	4.48	12.8	12.8	4.81	10.3	10.3	4.57	7.8	7.8	3.15
			19	14.5	13.4	4.34	14.1	13.1	4.68	13.7	12.8	5.01	11.1	11.0	4.76	8.3	8.3	3.28
			22	15.9	10.8	4.49	15.5	10.6	4.84	15.0	10.3	5.19	12.1	8.7	4.93	9.1	7.1	3.40
		32	16	13.8	13.8	4.17	13.4	13.4	4.49	13.0	13.0	4.82	10.5	10.5	4.58	7.9	7.9	3.15
			19	14.7	13.6	4.35	14.3	13.3	4.69	13.9	13.0	5.02	11.2	11.1	4.77	8.5	8.5	3.29
			22	16.2	11.0	4.50	15.7	10.7	4.85	15.2	10.4	5.20	12.3	8.9	4.94	9.3	7.2	3.40
S-71PU1E5A×2 U-140PEY1E8	220V 230V 240V 50Hz 3phase	23	16	14.1	11.0	4.87	14.1	11.0	5.23	13.6	10.8	5.56	12.6	10.5	5.79	9.2	8.3	4.73
			19	15.1	8.3	5.08	15.1	8.3	5.46	14.5	8.1	5.80	13.5	7.7	6.04	9.8	5.9	4.93
			22	16.5	5.6	5.25	16.5	5.6	5.64	15.9	5.4	6.00	14.8	5.0	6.25	10.8	3.7	5.10
		25	16	14.6	13.1	4.95	14.6	13.2	5.32	14.0	12.9	5.66	13.1	12.7	5.88	9.5	9.3	4.81
			19	15.6	10.4	5.16	15.6	10.4	5.55	15.0	10.1	5.90	13.9	9.7	6.14	10.2	7.6	5.02
			22	17.1	7.6	5.34	17.1	7.7	5.74	16.4	7.4	6.11	15.3	7.0	6.35	11.2	5.4	5.19
		27	16	15.1	15.1	5.03	15.1	15.1	5.41	14.5	14.5	5.75	13.5	13.5	5.98	9.9	9.9	4.89
			19	16.1	12.5	5.25	16.1	12.6	5.64	15.5	12.2	6.00	14.4	12.0	6.24	10.5	9.5	5.10
			22	17.7	9.8	5.43	17.7	9.9	5.83	17.0	9.5	6.21	15.8	9.1	6.46	11.5	7.0	5.28
		29	16	15.3	15.3	5.05	15.3	15.3	5.42	14.7	14.7	5.77	13.7	13.7	6.00	10.0	10.0	4.90
			19	16.4	14.7	5.26	16.4	14.7	5.65	15.7	14.1	6.01	14.6	13.9	6.26	10.7	10.4	5.11
			22	17.9	11.8	5.44	17.9	11.9	5.85	17.2	11.5	6.22	16.0	11.2	6.47	11.7	8.9	5.29
		32	16	15.5	15.5	5.06	15.5	15.5	5.43	14.9	14.9	5.78	13.9	13.9	6.01	10.2	10.2	4.91
			19	16.6	14.9	5.28	16.6	14.8	5.67	16.0	14.4	6.03	14.8	14.1	6.27	10.9	10.6	5.13
			22	18.2	12.0	5.46	18.2	12.1	5.86	17.5	11.7	6.24	16.3	11.4	6.49	11.9	9.0	5.30

1-13. Capacity Table

1. Cooling Capacity Performance Data

□Combination of Single Unit

Ceiling Type

TC :Cooling Capacity
SHC :Sensible Heat Capacity
IPT :Cooling Power Consumption

unit : kW

Model	Power Source	Ambient Return Air		Outdoor air intake temp(℃ D.B.)														
				25℃			30℃			35℃			40℃			43℃		
		DB	WB	TC	SHC	IPT	TC	SHC	IPT	TC	SHC	IPT	TC	SHC	IPT	TC	SHC	IPT
S-60PT2E5A U-60PEY1E5	220V 230V 240V 50Hz 1phase	23	16	7.1	5.6	2.02	6.8	5.4	2.21	6.5	5.3	2.40	5.5	4.4	2.11	5.0	4.2	1.92
			19	7.7	4.3	2.10	7.3	4.1	2.30	7.0	4.0	2.50	5.9	3.3	2.20	5.4	3.1	2.00
			22	8.4	3.0	2.18	8.0	2.8	2.39	7.6	2.6	2.60	6.5	2.2	2.29	5.9	2.1	2.08
		25	16	7.1	6.4	2.02	6.8	6.3	2.21	6.5	6.1	2.40	5.5	5.1	2.11	5.0	4.8	1.92
			19	7.7	5.1	2.10	7.3	5.0	2.30	7.0	4.8	2.50	5.9	4.1	2.20	5.4	3.8	2.00
			22	8.4	3.9	2.18	8.0	3.7	2.39	7.6	3.5	2.60	6.5	3.0	2.29	5.9	2.8	2.08
		27	16	7.1	7.1	2.02	6.8	6.8	2.21	6.5	6.5	2.40	5.5	5.5	2.11	5.0	5.0	1.92
			19	7.7	5.9	2.10	7.3	5.7	2.30	7.0	5.5	2.50	5.9	4.8	2.20	5.4	4.5	2.00
			22	8.4	4.6	2.18	8.0	4.6	2.39	7.6	4.3	2.60	6.5	3.8	2.29	5.9	3.5	2.08
		29	16	7.1	7.1	2.02	6.8	6.8	2.21	6.5	6.5	2.40	5.5	5.5	2.11	5.0	5.0	1.92
			19	7.7	6.8	2.10	7.3	6.5	2.30	7.0	6.4	2.50	5.9	5.5	2.20	5.4	5.1	2.00
			22	8.4	5.5	2.18	8.0	5.3	2.39	7.6	5.2	2.60	6.5	4.5	2.29	5.9	4.2	2.08
		32	16	7.1	7.1	2.02	6.8	6.8	2.21	6.5	6.5	2.40	5.5	5.5	2.11	5.0	5.0	1.92
			19	7.7	6.8	2.10	7.3	6.5	2.30	7.0	6.4	2.50	5.9	5.5	2.20	5.4	5.1	2.00
			22	8.4	5.5	2.18	8.0	5.3	2.39	7.6	5.2	2.60	6.5	4.5	2.29	5.9	4.2	2.08
S-71PT2E5A U-71PEY1E5	220V 230V 240V 50Hz 1phase	23	16	7.9	5.9	2.27	7.5	5.7	2.49	7.2	5.6	2.71	6.1	4.7	2.38	5.5	4.5	2.17
			19	8.5	4.6	2.37	8.1	4.4	2.59	7.7	4.3	2.82	6.5	3.6	2.48	5.9	3.4	2.26
			22	9.2	3.3	2.46	8.8	3.1	2.70	8.4	2.9	2.93	7.1	2.6	2.58	6.4	2.2	2.35
		25	16	7.9	6.7	2.27	7.5	6.4	2.49	7.2	6.2	2.71	6.1	5.4	2.38	5.5	5.2	2.17
			19	8.5	5.4	2.37	8.1	5.2	2.59	7.7	4.9	2.82	6.5	4.3	2.48	5.9	4.1	2.26
			22	9.2	4.1	2.46	8.8	3.9	2.70	8.4	3.8	2.93	7.1	3.2	2.58	6.4	3.0	2.35
		27	16	7.9	7.5	2.27	7.5	7.2	2.49	7.2	7.0	2.71	6.1	6.1	2.38	5.5	5.5	2.17
			19	8.5	6.2	2.37	8.1	6.0	2.59	7.7	5.7	2.82	6.5	4.9	2.48	5.9	4.9	2.26
			22	9.2	4.9	2.46	8.8	4.7	2.70	8.4	4.6	2.93	7.1	3.9	2.58	6.4	3.8	2.35
		29	16	7.9	7.9	2.27	7.5	7.5	2.49	7.2	7.2	2.71	6.1	6.1	2.38	5.5	5.5	2.17
			19	8.5	7.1	2.37	8.1	6.8	2.59	7.7	6.5	2.82	6.5	5.6	2.48	5.9	5.6	2.26
			22	9.2	5.7	2.46	8.8	5.6	2.70	8.4	5.3	2.93	7.1	4.7	2.58	6.4	4.4	2.35
		32	16	7.9	7.9	2.27	7.5	7.5	2.49	7.2	7.2	2.71	6.1	6.1	2.38	5.5	5.5	2.17
			19	8.5	7.1	2.37	8.1	6.8	2.59	7.7	6.5	2.82	6.5	5.6	2.48	5.9	5.6	2.26
			22	9.2	5.7	2.46	8.8	5.6	2.70	8.4	5.3	2.93	7.1	4.7	2.58	6.4	4.4	2.35
S-100PT2E5A U-100PEY1E5 (U-100PEY1E8)	220V 230V 240V 50Hz 1phase (3phase)	23	16	11.1	8.3	3.49	10.6	7.9	3.76	10.1	7.6	4.02	8.5	6.7	3.82	6.1	5.6	2.64
			19	11.9	6.2	3.64	11.3	5.9	3.92	10.7	5.7	4.20	9.1	5.0	3.99	6.5	4.0	2.75
			22	13.0	4.1	3.76	12.4	4.0	4.05	11.8	3.8	4.34	10.0	3.2	4.13	7.2	2.3	2.84
		25	16	11.5	9.9	3.54	11.0	9.5	3.82	10.4	9.0	4.09	8.8	8.2	3.89	6.3	6.0	2.68
			19	12.3	7.8	3.70	11.7	7.4	3.98	11.1	7.2	4.27	9.4	6.3	4.06	6.8	5.2	2.80
			22	13.5	5.7	3.82	12.8	5.4	4.12	12.2	5.2	4.42	10.3	4.5	4.20	7.4	3.5	2.89
		27	16	11.9	11.3	3.60	11.3	10.7	3.88	10.8	10.2	4.16	9.1	8.6	3.95	6.6	6.3	2.73
			19	12.7	9.4	3.76	12.1	9.0	4.05	11.5	8.6	4.34	9.8	7.7	4.12	7.0	6.5	2.84
			22	13.9	7.4	3.89	13.3	7.1	4.19	12.6	6.7	4.49	10.7	5.9	4.27	7.7	4.8	2.94
		29	16	12.1	11.5	3.61	11.5	10.9	3.89	10.9	10.3	4.17	9.3	8.8	3.96	6.7	6.4	2.73
			19	12.9	11.0	3.77	12.3	10.5	4.06	11.7	10.1	4.35	9.9	9.1	4.13	7.1	6.7	2.85
			22	14.1	8.9	3.90	13.5	8.5	4.20	12.8	8.2	4.50	10.9	7.3	4.28	7.8	6.0	2.95
		32	16	12.3	11.7	3.62	11.7	11.1	3.90	11.1	10.5	4.18	9.4	8.9	3.97	6.8	6.4	2.74
			19	13.1	11.2	3.78	12.5	10.7	4.07	11.8	10.2	4.36	10.1	9.3	4.14	7.2	6.8	2.86
			22	14.3	9.0	3.91	13.7	8.6	4.21	13.0	8.3	4.51	11.0	7.4	4.29	7.9	6.1	2.96
S-125PT2E5A U-125PEY1E5 (U-125PEY1E8)	220V 230V 240V 50Hz 1phase (3phase)	23	16	12.5	9.1	4.14	12.2	8.9	4.46	11.8	8.6	4.79	9.5	7.2	4.55	7.2	6.3	3.13
			19	13.4	7.0	4.32	13.0	6.8	4.66	12.6	6.6	4.99	10.2	5.5	4.74	7.7	4.5	3.27
			22	14.7	4.9	4.47	14.3	4.9	4.82	13.8	4.6	5.16	11.1	3.8	4.91	8.4	2.8	3.38
		25	16	13.0	10.8	4.21	12.6	10.4	4.54	12.2	10.2	4.87	9.9	8.6	4.62	7.4	7.3	3.19
			19	13.8	8.6	4.40	13.5	8.3	4.74	13.1	8.1	5.08	10.5	6.7	4.82	8.0	5.8	3.32
			22	15.2	6.5	4.55	14.8	6.3	4.90	14.3	6.1	5.25	11.5	5.0	4.99	8.7	4.0	3.44
		27	16	13.4	12.4	4.28	13.0	12.1	4.62	12.6	11.8	4.95	10.2	10.0	4.70	7.7	7.6	3.24
			19	14.3	10.2	4.47	13.9	10.0	4.81	13.5	9.7	5.16	10.9	8.2	4.90	8.2	7.2	3.38
			22	15.7	8.2	4.62	15.3	7.9	4.98	14.8	7.8	5.34	11.9	6.4	5.07	9.0	5.3	3.50
		29	16	13.6	13.3	4.29	13.2	12.9	4.63	12.8	12.6	4.96	10.3	10.1	4.71	7.8	7.6	3.25
			19	14.5	11.8	4.48	14.1	11.4	4.83	13.7	11.2	5.17	11.1	9.5	4.92	8.3	8.1	3.39
			22	15.9	9.7	4.63	15.5	9.5	4.99	15.0	9.2	5.35	12.1	7.7	5.09	9.1	6.7	3.50
		32	16	13.8	13.5	4.30	13.4	13.1	4.64	13.0	12.7	4.97	10.5	10.3	4.72	7.9	7.7	3.26
			19	14.7	11.9	4.49	14.3	11.6	4.84	13.9	11.3	5.19	11.2	9.6	4.93	8.5	8.3	3.40
			22	16.2	9.8	4.65	15.7	9.6	5.01	15.2	9.3	5.36	12.3	7.8	5.10	9.3	6.8	3.51
S-140PT2E5A U-140PEY1E8	220V 230V 240V 50Hz 3phase	23	16	13.6	9.6	4.63	13.6	9.6	4.97	13.1	9.3	5.29	12.2	9.0	5.50	8.9	7.5	4.49
			19	14.6	7.5	4.82	14.6	7.5	5.18	14.0	7.2	5.51	13.0	6.9	5.73	9.5	5.4	4.69
			22	16.0	5.5	4.99	16.0	5.4	5.36	15.4	5.3	5.70	14.3	4.8	5.93	10.4	3.5	4.85
		25	16	14.1	11.3	4.70	14.1	11.3	5.05	13.6	11.0	5.38	12.6	10.7	5.59	9.2	9.1	4.57
			19	15.1	9.2	4.91	15.1	9.1	5.27	14.5	8.8	5.61	13.5	8.5	5.83	9.9	7.0	4.77
			22	16.5	6.9	5.08	16.5	7.0	5.45	15.9	6.7	5.80	14.8	6.4	6.03	10.8	4.9	4.93
		27	16	14.6	13.0	4.78	14.6	13.1	5.14	14.0	12.7	5.46	13.1	12.5	5.68	9.5	9.4	4.64
			19	15.6	10.9	4.99	15.6	10.8	5.36	15.0	10.4	5.70	14.0	10.2	5.93	10.2	8.6	4.85
			22	17.1	8.6	5.16	17.1	8.7	5.54	16.4	8.4	5.90	15.3	8.0	6.13	11.2	6.5	5.01
		29	16	14.8	14.6	4.79	14.8	14.6	5.15	14.3	14.1	5.48	13.3	13.1	5.70	9.7	9.6	4.66
			19	15.8	12.3	5.00	15.8	12.4	5.37	15.2	12.0	5.71	14.2	11.8	5.94	10.4	10.1	4.86
			22	17.3	10.2	5.17	17.3	10.3	5.56	16.7	10.0	5.91	15.5	9.5	6.15	11.3	7.9	5.02
		32	16	15.0	14.8	4.81	15.0	14.8	5.16	14.5	14.3	5.49	13.4	13.2	5.71	9.8	9.7	4.67
			19	16.1	12.5	5.01	16.1	12.6	5.38	15.4	12.1	5.73	14.4	11.9	5.96	10.5	10.2	4.87
			22	17.6	10.4	5.19	17.6	10.5	5.57	16.9	10.1	5.93	15.7	9.7	6.16	11.5	8.0	5.04

1-13. Capacity Table

1. Cooling Capacity Performance Data

□Combination of Multiple Unit

Ceiling Type

TC :Cooling Capacity
SHC :Sensible Heat Capacity
IPT :Cooling Power Consumption

unit : kW

Model	Power Source	Ambient Return Air		Outdoor air intake temp(℃ D.B.)														
				25℃			30℃			35℃			40℃			43℃		
		DB	WB	TC	SHC	IPT	TC	SHC	IPT	TC	SHC	IPT	TC	SHC	IPT	TC	SHC	IPT
S-36PT2E5A×2 U-71PEY1E5	220V 230V 240V 50Hz 1phase	23	16	7.9	6.5	2.27	7.5	6.4	2.49	7.2	6.2	2.71	6.1	5.4	2.38	5.5	5.2	2.17
			19	8.5	4.9	2.37	8.1	4.8	2.59	7.7	4.6	2.82	6.5	3.9	2.48	5.9	3.8	2.26
			22	9.2	3.3	2.46	8.8	3.2	2.70	8.4	3.0	2.93	7.1	2.5	2.58	6.4	2.3	2.35
		25	16	7.9	7.6	2.27	7.5	7.3	2.49	7.2	7.2	2.71	6.1	6.1	2.38	5.5	5.5	2.17
			19	8.5	6.0	2.37	8.1	5.8	2.59	7.7	5.5	2.82	6.5	4.9	2.48	5.9	4.7	2.26
			22	9.2	4.4	2.46	8.8	4.3	2.70	8.4	4.1	2.93	7.1	3.5	2.58	6.4	3.3	2.35
		27	16	7.9	7.9	2.27	7.5	7.5	2.49	7.2	7.2	2.71	6.1	6.1	2.38	5.5	5.5	2.17
			19	8.5	7.0	2.37	8.1	6.9	2.59	7.7	6.6	2.82	6.5	5.7	2.48	5.9	5.6	2.26
			22	9.2	5.4	2.46	8.8	5.2	2.70	8.4	5.1	2.93	7.1	4.4	2.58	6.4	4.2	2.35
		29	16	7.9	7.9	2.27	7.5	7.5	2.49	7.2	7.2	2.71	6.1	6.1	2.38	5.5	5.5	2.17
			19	8.5	8.1	2.37	8.1	7.8	2.59	7.7	7.5	2.82	6.5	6.5	2.48	5.9	5.9	2.26
			22	9.2	6.5	2.46	8.8	6.3	2.70	8.4	6.0	2.93	7.1	5.4	2.58	6.4	5.2	2.35
		32	16	7.9	7.9	2.27	7.5	7.5	2.49	7.2	7.2	2.71	6.1	6.1	2.38	5.5	5.5	2.17
			19	8.5	8.1	2.37	8.1	7.8	2.59	7.7	7.5	2.82	6.5	6.5	2.48	5.9	5.9	2.26
			22	9.2	6.5	2.46	8.8	6.3	2.70	8.4	6.0	2.93	7.1	5.4	2.58	6.4	5.2	2.35
S-50PT2E5A×2 U-100PEY1E5 (U-100PEY1E8)	220V 230V 240V 50Hz 1phase (3phase)	23	16	11.1	8.5	3.49	10.6	8.1	3.76	10.1	7.8	4.02	8.5	6.8	3.82	6.1	5.6	2.64
			19	11.9	6.5	3.64	11.3	6.1	3.92	10.7	5.8	4.20	9.1	5.1	3.99	6.5	4.0	2.75
			22	13.0	4.6	3.76	12.4	4.4	4.05	11.8	4.2	4.34	10.0	3.5	4.13	7.2	2.5	2.84
		25	16	11.5	10.0	3.54	11.0	9.6	3.82	10.4	9.1	4.09	8.8	8.1	3.89	6.3	6.3	2.68
			19	12.3	7.9	3.70	11.7	7.5	3.98	11.1	7.2	4.27	9.4	6.3	4.06	6.8	5.2	2.80
			22	13.5	6.1	3.82	12.8	5.8	4.12	12.2	5.5	4.42	10.3	4.7	4.20	7.4	3.6	2.89
		27	16	11.9	11.6	3.60	11.3	11.0	3.88	10.8	10.6	4.16	9.1	9.1	3.95	6.6	6.6	2.73
			19	12.7	9.5	3.76	12.1	9.0	4.05	11.5	8.6	4.34	9.8	7.7	4.12	7.0	6.3	2.84
			22	13.9	7.5	3.89	13.3	7.1	4.19	12.6	6.9	4.49	10.7	6.0	4.27	7.7	4.8	2.94
		29	16	12.1	12.1	3.61	11.5	11.5	3.89	10.9	10.9	4.17	9.3	9.3	3.96	6.7	6.7	2.73
			19	12.9	10.9	3.77	12.3	10.4	4.06	11.7	10.1	4.35	9.9	8.9	4.13	7.1	7.1	2.85
			22	14.1	8.9	3.90	13.5	8.5	4.20	12.8	8.3	4.50	10.9	7.3	4.28	7.8	5.9	2.95
		32	16	12.3	12.3	3.62	11.7	11.7	3.90	11.1	11.1	4.18	9.4	9.4	3.97	6.8	6.8	2.74
			19	13.1	11.1	3.78	12.5	10.6	4.07	11.8	10.2	4.36	10.1	9.1	4.14	7.2	7.2	2.86
			22	14.3	9.1	3.91	13.7	8.7	4.21	13.0	8.4	4.51	11.0	7.4	4.29	7.9	6.0	2.96
S-60PT2E5A×2 U-125PEY1E5 (U-125PEY1E8)	220V 230V 240V 50Hz 1phase (3phase)	23	16	12.5	9.7	4.14	12.2	9.5	4.46	11.8	9.2	4.79	9.5	7.8	4.55	7.2	6.8	3.13
			19	13.4	7.4	4.32	13.0	7.2	4.66	12.6	7.0	4.99	10.2	5.8	4.74	7.7	4.8	3.27
			22	14.7	5.1	4.47	14.3	4.9	4.82	13.8	4.8	5.16	11.1	3.8	4.91	8.4	2.9	3.38
		25	16	13.0	11.6	4.21	12.6	11.3	4.54	12.2	11.0	4.87	9.9	9.4	4.62	7.4	7.4	3.19
			19	13.8	9.1	4.40	13.5	9.0	4.74	13.1	8.8	5.08	10.5	7.3	4.82	8.0	6.3	3.32
			22	15.2	6.8	4.55	14.8	6.7	4.90	14.3	6.4	5.25	11.5	5.3	4.99	8.7	4.3	3.44
		27	16	13.4	13.4	4.28	13.0	13.0	4.62	12.6	12.6	4.95	10.2	10.2	4.70	7.7	7.7	3.24
			19	14.3	10.9	4.47	13.9	10.7	4.81	13.5	10.5	5.16	10.9	8.8	4.90	8.2	7.8	3.38
			22	15.7	8.7	4.62	15.3	8.4	4.98	14.8	8.2	5.34	11.9	6.8	5.07	9.0	5.7	3.50
		29	16	13.6	13.6	4.29	13.2	13.2	4.63	12.8	12.8	4.96	10.3	10.3	4.71	7.8	7.8	3.25
			19	14.5	12.7	4.48	14.1	12.4	4.83	13.7	12.2	5.17	11.1	10.4	4.92	8.3	8.3	3.39
			22	15.9	10.4	4.63	15.5	10.1	4.99	15.0	9.9	5.35	12.1	8.4	5.09	9.1	7.2	3.50
		32	16	13.8	13.8	4.30	13.4	13.4	4.64	13.0	13.0	4.97	10.5	10.5	4.72	7.9	7.9	3.26
			19	14.7	12.9	4.49	14.3	12.6	4.84	13.9	12.3	5.19	11.2	10.5	4.93	8.5	8.5	3.40
			22	16.2	10.6	4.65	15.7	10.2	5.01	15.2	10.0	5.36	12.3	8.5	5.10	9.3	7.4	3.51
S-71PT2E5A×2 U-140PEY1E8	220V 230V 240V 50Hz 3phase	23	16	13.6	10.3	4.63	13.6	10.4	4.97	13.1	10.1	5.29	12.2	9.7	5.50	8.9	8.2	4.49
			19	14.6	8.1	4.82	14.6	8.0	5.18	14.0	7.7	5.51	13.0	7.3	5.73	9.5	5.8	4.69
			22	16.0	5.7	4.99	16.0	5.7	5.36	15.4	5.4	5.70	14.3	5.0	5.93	10.4	3.7	4.85
		25	16	14.1	12.2	4.70	14.1	12.2	5.05	13.6	11.9	5.38	12.6	11.6	5.59	9.2	9.2	4.57
			19	15.1	9.8	4.91	15.1	9.8	5.27	14.5	9.5	5.61	13.5	9.1	5.83	9.9	7.6	4.77
			22	16.5	7.4	5.08	16.5	7.5	5.45	15.9	7.2	5.80	14.8	6.8	6.03	10.8	5.3	4.93
		27	16	14.6	14.2	4.78	14.6	14.2	5.14	14.0	13.8	5.46	13.1	13.1	5.68	9.5	9.5	4.64
			19	15.6	11.7	4.99	15.6	11.6	5.36	15.0	11.2	5.70	14.0	11.1	5.93	10.2	9.3	4.85
			22	17.1	9.2	5.16	17.1	9.3	5.54	16.4	8.9	5.90	15.3	8.6	6.13	11.2	7.0	5.01
		29	16	14.8	14.8	4.79	14.8	14.8	5.15	14.3	14.3	5.48	13.3	13.3	5.70	9.7	9.7	4.66
			19	15.8	13.3	5.00	15.8	13.4	5.37	15.2	13.0	5.71	14.2	12.8	5.94	10.4	10.4	4.86
			22	17.3	11.0	5.17	17.3	11.0	5.56	16.7	10.7	5.91	15.5	10.3	6.15	11.3	8.5	5.02
		32	16	15.0	15.0	4.81	15.0	15.0	5.16	14.5	14.5	5.49	13.4	13.4	5.71	9.8	9.8	4.67
			19	16.1	13.6	5.01	16.1	13.7	5.38	15.4	13.1	5.73	14.4	12.9	5.96	10.5	10.5	4.87
			22	17.6	11.2	5.19	17.6	11.2	5.57	16.9	10.9	5.93	15.7	10.4	6.16	11.5	8.7	5.04

1-13. Capacity Table

1. Cooling Capacity Performance Data

□Combination of Single Unit

Wall Mounted Type

TC :Cooling Capacity
SHC :Sensible Heat Capacity
IPT :Cooling Power Consumption

unit : kW

Model	Power Source	Ambient Return Air		Outdoor air intake temp(□C D.B.)														
				25□C			30□C			35□C			40□C			43□C		
		DB	WB	TC	SHC	IPT	TC	SHC	IPT	TC	SHC	IPT	TC	SHC	IPT	TC	SHC	IPT
S-60PK1E5A U-60PEY1E5	220V 230V 240V 50Hz 1phase	23	16	7.1	5.6	2.22	6.8	5.3	2.43	6.5	5.1	2.64	5.5	4.4	2.32	5.0	4.1	2.12
			19	7.7	4.2	2.31	7.3	4.0	2.53	7.0	4.0	2.75	5.9	3.4	2.42	5.4	3.1	2.20
			22	8.4	2.9	2.40	8.0	2.8	2.63	7.6	2.7	2.86	6.5	2.3	2.52	5.9	2.1	2.29
		25	16	7.1	6.4	2.22	6.8	6.1	2.43	6.5	5.9	2.64	5.5	5.1	2.32	5.0	4.7	2.12
			19	7.7	5.1	2.31	7.3	4.8	2.53	7.0	4.7	2.75	5.9	4.1	2.42	5.4	3.7	2.20
			22	8.4	3.8	2.40	8.0	3.6	2.63	7.6	3.4	2.86	6.5	3.0	2.52	5.9	2.7	2.29
		27	16	7.1	7.1	2.22	6.8	6.8	2.43	6.5	6.5	2.64	5.5	5.5	2.32	5.0	5.0	2.12
			19	7.7	5.9	2.31	7.3	5.7	2.53	7.0	5.5	2.75	5.9	4.7	2.42	5.4	4.4	2.20
			22	8.4	4.6	2.40	8.0	4.4	2.63	7.6	4.3	2.86	6.5	3.7	2.52	5.9	3.4	2.29
		29	16	7.1	7.1	2.22	6.8	6.8	2.43	6.5	6.5	2.64	5.5	5.5	2.32	5.0	5.0	2.12
			19	7.7	6.7	2.31	7.3	6.5	2.53	7.0	6.3	2.75	5.9	5.4	2.42	5.4	5.0	2.20
			22	8.4	5.5	2.40	8.0	5.3	2.63	7.6	5.1	2.86	6.5	4.4	2.52	5.9	4.1	2.29
		32	16	7.1	7.1	2.22	6.8	6.8	2.43	6.5	6.5	2.64	5.5	5.5	2.32	5.0	5.0	2.12
			19	7.7	6.7	2.31	7.3	6.5	2.53	7.0	6.3	2.75	5.9	5.4	2.42	5.4	5.0	2.20
			22	8.4	5.5	2.40	8.0	5.3	2.63	7.6	5.1	2.86	6.5	4.4	2.52	5.9	4.1	2.29
S-71PK1E5A U-71PEY1E5	220V 230V 240V 50Hz 1phase	23	16	7.9	5.8	2.42	7.5	5.6	2.65	7.2	5.4	2.88	6.1	4.7	2.53	5.5	4.3	2.31
			19	8.5	4.5	2.52	8.1	4.3	2.76	7.7	4.1	3.00	6.5	3.5	2.64	5.9	3.3	2.40
			22	9.2	3.2	2.62	8.8	3.1	2.87	8.4	3.0	3.12	7.1	2.5	2.74	6.4	2.2	2.50
		25	16	7.9	6.6	2.42	7.5	6.3	2.65	7.2	6.1	2.88	6.1	5.3	2.53	5.5	5.0	2.31
			19	8.5	5.3	2.52	8.1	5.1	2.76	7.7	4.9	3.00	6.5	4.2	2.64	5.9	3.9	2.40
			22	9.2	4.0	2.62	8.8	3.9	2.87	8.4	3.7	3.12	7.1	3.2	2.74	6.4	2.9	2.50
		27	16	7.9	7.4	2.42	7.5	7.1	2.65	7.2	6.9	2.88	6.1	6.0	2.53	5.5	5.5	2.31
			19	8.5	6.1	2.52	8.1	5.9	2.76	7.7	5.6	3.00	6.5	4.9	2.64	5.9	4.6	2.40
			22	9.2	4.8	2.62	8.8	4.6	2.87	8.4	4.4	3.12	7.1	3.9	2.74	6.4	3.6	2.50
		29	16	7.9	7.9	2.42	7.5	7.5	2.65	7.2	7.2	2.88	6.1	6.1	2.53	5.5	5.5	2.31
			19	8.5	6.9	2.52	8.1	6.7	2.76	7.7	6.4	3.00	6.5	5.5	2.64	5.9	5.2	2.40
			22	9.2	5.6	2.62	8.8	5.4	2.87	8.4	5.2	3.12	7.1	4.5	2.74	6.4	4.2	2.50
		32	16	7.9	7.9	2.42	7.5	7.5	2.65	7.2	7.2	2.88	6.1	6.1	2.53	5.5	5.5	2.31
			19	8.5	6.9	2.52	8.1	6.7	2.76	7.7	6.4	3.00	6.5	5.5	2.64	5.9	5.2	2.40
			22	9.2	5.6	2.62	8.8	5.4	2.87	8.4	5.2	3.12	7.1	4.5	2.74	6.4	4.2	2.50
S-100PK1E5A U-100PEY1E5 (U-100PEY1E8)	220V 230V 240V 50Hz 1phase (3 phase)	23	16	9.4	6.3	3.05	8.9	6.0	3.29	8.5	5.8	3.52	7.2	5.0	3.35	5.2	3.6	2.31
			19	10.0	5.0	3.18	9.5	4.8	3.43	9.1	4.6	3.68	7.7	3.9	3.49	5.5	2.8	2.41
			22	11.0	3.9	3.29	10.5	3.7	3.55	9.9	3.5	3.80	8.4	2.9	3.61	6.0	2.1	2.49
		25	16	9.7	7.2	3.10	9.2	6.8	3.34	8.8	6.6	3.58	7.5	5.8	3.41	5.3	4.1	2.35
			19	10.4	5.9	3.24	9.9	5.6	3.49	9.4	5.4	3.74	8.0	4.7	3.55	5.7	3.3	2.45
			22	11.4	4.8	3.35	10.8	4.5	3.61	10.3	4.3	3.87	8.7	3.6	3.67	6.3	2.6	2.53
		27	16	10.0	8.1	3.15	9.6	7.8	3.40	9.1	7.5	3.64	7.7	6.5	3.46	5.5	4.6	2.39
			19	10.7	6.8	3.29	10.2	6.5	3.55	9.7	6.2	3.80	8.2	5.3	3.61	5.9	3.8	2.49
			22	11.7	5.6	3.40	11.2	5.4	3.67	10.6	5.1	3.93	9.0	4.4	3.74	6.5	3.2	2.57
		29	16	10.2	8.9	3.16	9.7	8.5	3.41	9.2	8.2	3.65	7.8	7.1	3.47	5.6	5.1	2.39
			19	10.9	7.6	3.30	10.4	7.3	3.55	9.8	6.9	3.81	8.4	6.1	3.62	6.0	4.3	2.49
			22	11.9	6.4	3.41	11.4	6.1	3.68	10.8	5.8	3.94	9.2	5.1	3.74	6.6	3.6	2.58
		32	16	10.3	9.0	3.17	9.8	8.6	3.42	9.4	8.3	3.66	7.9	7.2	3.48	5.7	5.2	2.40
			19	11.0	7.7	3.31	10.5	7.3	3.56	10.0	7.0	3.82	8.5	6.1	3.63	6.1	4.4	2.50
			22	12.1	6.5	3.42	11.5	6.2	3.69	10.9	5.9	3.95	9.3	5.1	3.75	6.7	3.7	2.59

1-13. Capacity Table

1. Cooling Capacity Performance Data

□Combination of Multiple Unit

Wall Mounted Type

TC :Cooling Capacity
SHC :Sensible Heat Capacity
IPT :Cooling Power Consumption

unit : kW

Model	Power Source	Ambient Return Air		Outdoor air intake temp(□C D.B.)														
				25□C			30□C			35□C			40□C			43□C		
		DB	WB	TC	SHC	IPT	TC	SHC	IPT	TC	SHC	IPT	TC	SHC	IPT	TC	SHC	IPT
S-36PK1E5A×2 U-71PEY1E5	220V 230V 240V 50Hz 1phase	23	16	7.9	6.3	2.42	7.5	6.0	2.65	7.2	5.8	2.88	6.1	5.1	2.53	5.5	4.7	2.31
			19	8.5	4.8	2.52	8.1	4.5	2.76	7.7	4.3	3.00	6.5	3.8	2.64	5.9	3.5	2.40
			22	9.2	3.2	2.62	8.8	3.1	2.87	8.4	3.0	3.12	7.1	2.5	2.74	6.4	2.2	2.50
		25	16	7.9	7.1	2.42	7.5	6.9	2.65	7.2	6.8	2.88	6.1	5.8	2.53	5.5	5.4	2.31
			19	8.5	5.7	2.52	8.1	5.4	2.76	7.7	5.2	3.00	6.5	4.6	2.64	5.9	4.3	2.40
			22	9.2	4.1	2.62	8.8	4.0	2.87	8.4	3.9	3.12	7.1	3.3	2.74	6.4	3.0	2.50
		27	16	7.9	7.9	2.42	7.5	7.5	2.65	7.2	7.2	2.88	6.1	6.1	2.53	5.5	5.5	2.31
			19	8.5	6.6	2.52	8.1	6.4	2.76	7.7	6.2	3.00	6.5	5.3	2.64	5.9	5.1	2.40
			22	9.2	5.1	2.62	8.8	4.9	2.87	8.4	4.8	3.12	7.1	4.1	2.74	6.4	3.8	2.50
		29	16	7.9	7.9	2.42	7.5	7.5	2.65	7.2	7.2	2.88	6.1	6.1	2.53	5.5	5.5	2.31
			19	8.5	7.6	2.52	8.1	7.3	2.76	7.7	7.0	3.00	6.5	6.1	2.64	5.9	5.7	2.40
			22	9.2	6.1	2.62	8.8	5.8	2.87	8.4	5.7	3.12	7.1	4.9	2.74	6.4	4.6	2.50
		32	16	7.9	7.9	2.42	7.5	7.5	2.65	7.2	7.2	2.88	6.1	6.1	2.53	5.5	5.5	2.31
			19	8.5	7.6	2.52	8.1	7.3	2.76	7.7	7.0	3.00	6.5	6.1	2.64	5.9	5.7	2.40
			22	9.2	6.1	2.62	8.8	5.8	2.87	8.4	5.7	3.12	7.1	4.9	2.74	6.4	4.6	2.50
S-50PK1E5A×2 U-100PEY1E5 (U-100PEY1E8)	220V 230V 240V 50Hz 1phase (3phase)	23	16	10.6	8.1	3.37	10.1	7.7	3.63	9.6	7.4	3.90	8.2	6.6	3.70	5.9	5.1	2.55
			19	11.4	6.3	3.52	10.8	5.9	3.79	10.3	5.7	4.06	8.7	4.9	3.86	6.3	3.7	2.66
			22	12.4	4.3	3.64	11.9	4.1	3.92	11.3	4.0	4.20	9.6	3.3	3.99	6.9	2.4	2.75
		25	16	11.0	9.7	3.43	10.5	9.2	3.70	10.0	8.9	3.96	8.5	7.9	3.76	6.1	5.9	2.59
			19	11.8	7.6	3.58	11.2	7.2	3.85	10.6	6.9	4.13	9.0	6.2	3.93	6.5	4.8	2.71
			22	12.9	5.8	3.70	12.3	5.5	3.99	11.7	5.2	4.27	9.9	4.5	4.06	7.1	3.4	2.80
		27	16	11.4	11.2	3.49	10.8	10.6	3.76	10.3	10.2	4.03	8.7	8.7	3.83	6.3	6.3	2.64
			19	12.2	9.2	3.64	11.6	8.8	3.92	11.0	8.4	4.20	9.3	7.4	3.99	6.7	5.8	2.75
			22	13.3	7.2	3.76	12.7	6.9	4.05	12.1	6.6	4.35	10.2	5.8	4.13	7.3	4.4	2.85
		29	16	11.5	11.5	3.50	11.0	11.0	3.77	10.5	10.5	4.04	8.9	8.9	3.84	6.4	6.4	2.64
			19	12.3	10.6	3.65	11.7	10.1	3.93	11.2	9.7	4.21	9.5	8.8	4.00	6.8	6.5	2.76
			22	13.5	8.7	3.77	12.9	8.3	4.06	12.2	7.9	4.36	10.4	7.0	4.14	7.5	5.5	2.85
		32	16	11.7	11.7	3.50	11.2	11.2	3.78	10.6	10.6	4.05	9.0	9.0	3.84	6.5	6.5	2.65
			19	12.5	10.8	3.65	11.9	10.3	3.94	11.3	9.8	4.22	9.6	8.9	4.01	6.9	6.6	2.76
			22	13.7	8.8	3.78	13.1	8.4	4.07	12.4	8.0	4.37	10.5	7.1	4.15	7.6	5.5	2.86
S-60PK1E5A×2 U-125PEY1E5 (U-125PEY1E8)	220V 230V 240V 50Hz 1phase (3phase)	23	16	12.2	9.4	4.02	11.9	9.3	4.33	11.5	9.0	4.64	9.3	7.6	4.41	7.0	6.2	3.04
			19	13.1	7.2	4.19	12.7	7.0	4.51	12.3	6.8	4.84	9.9	5.6	4.60	7.5	4.5	3.17
			22	14.3	5.0	4.33	13.9	4.8	4.67	13.5	4.7	5.00	10.9	3.8	4.75	8.2	2.9	3.28
		25	16	12.7	11.3	4.08	12.3	10.9	4.40	12.0	10.8	4.72	9.6	9.1	4.48	7.3	7.1	3.09
			19	13.5	8.9	4.26	13.2	8.7	4.59	12.8	8.5	4.92	10.3	7.1	4.67	7.8	5.8	3.22
			22	14.8	6.6	4.41	14.4	6.5	4.75	14.0	6.3	5.09	11.3	5.2	4.84	8.5	4.1	3.33
		27	16	13.1	13.1	4.15	12.7	12.7	4.47	12.4	12.4	4.79	10.0	10.0	4.55	7.5	7.5	3.14
			19	14.0	10.7	4.33	13.6	10.4	4.66	13.2	10.1	5.00	10.6	8.5	4.75	8.0	7.0	3.27
			22	15.3	8.4	4.48	14.9	8.2	4.83	14.5	8.0	5.17	11.7	6.7	4.92	8.8	5.4	3.39
		29	16	13.3	13.3	4.16	12.9	12.9	4.48	12.5	12.5	4.81	10.1	10.1	4.57	7.6	7.6	3.15
			19	14.2	12.3	4.34	13.8	12.1	4.68	13.4	11.8	5.01	10.8	10.0	4.76	8.2	7.9	3.28
			22	15.6	10.1	4.49	15.1	9.9	4.84	14.7	9.7	5.19	11.8	8.1	4.93	8.9	6.6	3.40
		32	16	13.5	13.5	4.17	13.1	13.1	4.49	12.7	12.7	4.82	10.3	10.3	4.58	7.8	7.8	3.15
			19	14.4	12.5	4.35	14.0	12.2	4.69	13.6	12.0	5.02	11.0	10.2	4.77	8.3	8.0	3.29
			22	15.8	10.3	4.50	15.4	10.1	4.85	14.9	9.8	5.20	12.0	8.3	4.94	9.1	6.7	3.40
S-71PK1E5A×2 U-140PEY1E8	220V 230V 240V 50Hz 3phase	23	16	14.1	10.4	4.87	14.1	10.4	5.23	13.6	10.1	5.56	12.6	9.9	5.79	9.2	7.7	4.73
			19	15.1	8.1	5.08	15.1	8.1	5.46	14.5	7.8	5.80	13.5	7.5	6.04	9.8	5.7	4.93
			22	16.5	5.7	5.25	16.5	5.8	5.64	15.9	5.5	6.00	14.8	5.1	6.25	10.8	3.8	5.10
		25	16	14.6	12.3	4.95	14.6	12.3	5.32	14.0	11.9	5.66	13.1	11.7	5.88	9.5	9.0	4.81
			19	15.6	9.8	5.16	15.6	9.9	5.55	15.0	9.5	5.90	13.9	9.2	6.14	10.2	7.2	5.02
			22	17.1	7.5	5.34	17.1	7.6	5.74	16.4	7.3	6.11	15.3	6.9	6.35	11.2	5.2	5.19
		27	16	15.1	14.2	5.03	15.1	14.2	5.41	14.5	13.9	5.75	13.5	13.5	5.98	9.9	9.9	4.89
			19	16.1	11.7	5.25	16.1	11.7	5.64	15.5	11.4	6.00	14.4	11.0	6.24	10.5	8.7	5.10
			22	17.7	9.3	5.43	17.7	9.4	5.83	17.0	9.0	6.21	15.8	8.7	6.46	11.5	6.7	5.28
		29	16	15.3	15.3	5.05	15.3	15.3	5.42	14.7	14.7	5.77	13.7	13.7	6.00	10.0	10.0	4.90
			19	16.4	13.5	5.26	16.4	13.5	5.65	15.7	13.0	6.01	14.6	12.7	6.26	10.7	10.0	5.11
			22	17.9	11.1	5.44	17.9	11.2	5.85	17.2	10.8	6.22	16.0	10.5	6.47	11.7	8.2	5.29
		32	16	15.5	15.5	5.06	15.5	15.5	5.43	14.9	14.9	5.78	13.9	13.9	6.01	10.2	10.2	4.91
			19	16.6	13.6	5.28	16.6	13.7	5.67	16.0	13.3	6.03	14.8	12.9	6.27	10.9	10.2	5.13
			22	18.2	11.3	5.46	18.2	11.4	5.86	17.5	11.0	6.24	16.3	10.5	6.49	11.9	8.3	5.30

1-13. Capacity Table

1. Cooling Capacity Performance Data

□Combination of Single Unit

Low Silhouette Ducted Type

TC :Cooling Capacity
SHC :Sensible Heat Capacity
IPT :Cooling Power Consumption

unit : kW

Model	Power Source	Ambient Return Air		Outdoor air intake temp(□C D.B.)														
				25□C			30□C			35□C			40□C			43□C		
		DB	WB	TC	SHC	IPT	TC	SHC	IPT	TC	SHC	IPT	TC	SHC	IPT	TC	SHC	IPT
S-60PF1E5A U-60PEY1E5	220V 230V 240V 50Hz 1phase	23	16	7.1	5.9	2.30	6.8	5.6	2.52	6.5	5.5	2.74	5.5	4.7	2.41	5.0	4.4	2.19
			19	7.7	4.3	2.39	7.3	4.1	2.62	7.0	4.1	2.85	5.9	3.5	2.51	5.4	3.2	2.28
			22	8.4	2.8	2.49	8.0	2.7	2.73	7.6	2.6	2.96	6.5	2.2	2.61	5.9	2.0	2.38
		25	16	7.1	6.9	2.30	6.8	6.6	2.52	6.5	6.5	2.74	5.5	5.5	2.41	5.0	5.0	2.19
			19	7.7	5.3	2.39	7.3	5.2	2.62	7.0	5.0	2.85	5.9	4.3	2.51	5.4	4.0	2.28
			22	8.4	3.8	2.49	8.0	3.7	2.73	7.6	3.6	2.96	6.5	3.0	2.61	5.9	2.8	2.38
		27	16	7.1	7.1	2.30	6.8	6.8	2.52	6.5	6.5	2.74	5.5	5.5	2.41	5.0	5.0	2.19
			19	7.7	6.3	2.39	7.3	6.1	2.62	7.0	6.0	2.85	5.9	5.1	2.51	5.4	4.7	2.28
			22	8.4	4.8	2.49	8.0	4.7	2.73	7.6	4.5	2.96	6.5	3.9	2.61	5.9	3.6	2.38
		29	16	7.1	7.1	2.30	6.8	6.8	2.52	6.5	6.5	2.74	5.5	5.5	2.41	5.0	5.0	2.19
			19	7.7	7.2	2.39	7.3	7.1	2.62	7.0	6.9	2.85	5.9	5.9	2.51	5.4	5.4	2.28
			22	8.4	5.8	2.49	8.0	5.7	2.73	7.6	5.5	2.96	6.5	4.8	2.61	5.9	4.4	2.38
		32	16	7.1	7.1	2.30	6.8	6.8	2.52	6.5	6.5	2.74	5.5	5.5	2.41	5.0	5.0	2.19
			19	7.7	7.2	2.39	7.3	7.1	2.62	7.0	6.9	2.85	5.9	5.9	2.51	5.4	5.4	2.28
			22	8.4	5.8	2.49	8.0	5.7	2.73	7.6	5.5	2.96	6.5	4.8	2.61	5.9	4.4	2.38
S-71PF1E5A U-71PEY1E5	220V 230V 240V 50Hz 1phase	23	16	7.9	5.9	2.64	7.5	5.7	2.89	7.2	5.5	3.14	6.1	4.8	2.76	5.5	4.4	2.52
			19	8.5	4.5	2.75	8.1	4.3	3.01	7.7	4.1	3.27	6.5	3.5	2.88	5.9	3.3	2.62
			22	9.2	3.1	2.86	8.8	2.9	3.13	8.4	2.7	3.40	7.1	2.4	2.99	6.4	2.1	2.73
		25	16	7.9	6.8	2.64	7.5	6.5	2.89	7.2	6.3	3.14	6.1	5.5	2.76	5.5	5.1	2.52
			19	8.5	5.3	2.75	8.1	5.2	3.01	7.7	5.0	3.27	6.5	4.3	2.88	5.9	4.0	2.62
			22	9.2	3.9	2.86	8.8	3.8	3.13	8.4	3.6	3.40	7.1	3.1	2.99	6.4	2.8	2.73
		27	16	7.9	7.6	2.64	7.5	7.4	2.89	7.2	7.2	3.14	6.1	6.1	2.76	5.5	5.5	2.52
			19	8.5	6.2	2.75	8.1	6.0	3.01	7.7	5.7	3.27	6.5	5.0	2.88	5.9	4.7	2.62
			22	9.2	4.8	2.86	8.8	4.7	3.13	8.4	4.5	3.40	7.1	3.9	2.99	6.4	3.6	2.73
		29	16	7.9	7.9	2.64	7.5	7.5	2.89	7.2	7.2	3.14	6.1	6.1	2.76	5.5	5.5	2.52
			19	8.5	7.1	2.75	8.1	6.9	3.01	7.7	6.6	3.27	6.5	5.8	2.88	5.9	5.5	2.62
			22	9.2	5.8	2.86	8.8	5.6	3.13	8.4	5.3	3.40	7.1	4.7	2.99	6.4	4.4	2.73
		32	16	7.9	7.9	2.64	7.5	7.5	2.89	7.2	7.2	3.14	6.1	6.1	2.76	5.5	5.5	2.52
			19	8.5	7.1	2.75	8.1	6.9	3.01	7.7	6.6	3.27	6.5	5.8	2.88	5.9	5.5	2.62
			22	9.2	5.8	2.86	8.8	5.6	3.13	8.4	5.3	3.40	7.1	4.7	2.99	6.4	4.4	2.73

1-13. Capacity Table

1. Cooling Capacity Performance Data

□Combination of Single Unit

Low Silhouette Ducted Type

TC :Cooling Capacity
SHC :Sensible Heat Capacity
IPT :Cooling Power Consumption

unit : kW

Model	Power Source	Ambient Return Air		Outdoor air intake temp(□C D.B.)														
				25□C			30□C			35□C			40□C			43□C		
		DB	WB	TC	SHC	IPT	TC	SHC	IPT	TC	SHC	IPT	TC	SHC	IPT	TC	SHC	IPT
S-100PF1E5A U-100PEY1E5 (U-100PEY1E8)	220V 230V 240V 50Hz 1phase (3phase)	23	16	11.1	9.1	3.37	10.6	8.7	3.63	10.1	8.3	3.90	8.5	7.4	3.70	6.1	5.7	2.55
			19	11.9	6.7	3.52	11.3	6.3	3.79	10.7	6.1	4.06	9.1	5.4	3.86	6.5	4.1	2.66
			22	13.0	4.4	3.64	12.4	4.2	3.92	11.8	3.9	4.20	10.0	3.4	3.99	7.2	2.4	2.75
		25	16	11.5	10.9	3.43	11.0	10.4	3.70	10.4	10.0	3.96	8.8	8.8	3.76	6.3	6.3	2.59
			19	12.3	8.4	3.58	11.7	8.0	3.85	11.1	7.7	4.13	9.4	6.9	3.93	6.8	5.3	2.71
			22	13.5	6.1	3.70	12.8	5.7	3.99	12.2	5.6	4.27	10.3	4.8	4.06	7.4	3.6	2.80
		27	16	11.9	11.9	3.49	11.3	11.3	3.76	10.8	10.8	4.03	9.1	9.1	3.83	6.6	6.6	2.64
			19	12.7	10.3	3.64	12.1	9.8	3.92	11.5	9.4	4.20	9.8	8.5	3.99	7.0	6.5	2.75
			22	13.9	7.9	3.76	13.3	7.6	4.05	12.6	7.2	4.35	10.7	6.4	4.13	7.7	4.9	2.85
		29	16	12.1	12.1	3.50	11.5	11.5	3.77	10.9	10.9	4.04	9.3	9.3	3.84	6.7	6.7	2.64
			19	12.9	12.1	3.65	12.3	11.6	3.93	11.7	11.1	4.21	9.9	9.9	4.00	7.1	7.1	2.76
			22	14.1	9.8	3.77	13.5	9.3	4.06	12.8	8.9	4.36	10.9	7.9	4.14	7.8	6.1	2.85
		32	16	12.3	12.3	3.50	11.7	11.7	3.78	11.1	11.1	4.05	9.4	9.4	3.84	6.8	6.8	2.65
			19	13.1	12.3	3.65	12.5	11.8	3.94	11.8	11.2	4.22	10.1	10.1	4.01	7.2	7.2	2.76
			22	14.3	9.9	3.78	13.7	9.5	4.07	13.0	9.0	4.37	11.0	8.0	4.15	7.9	6.2	2.86
S-125PF1E5A U-125PEY1E5 (U-125PEY1E8)	220V 230V 240V 50Hz 1phase (3phase)	23	16	12.5	9.3	4.02	12.2	9.2	4.33	11.8	8.9	4.64	9.5	7.5	4.41	7.2	6.1	3.04
			19	13.4	7.1	4.19	13.0	7.0	4.51	12.6	6.8	4.84	10.2	5.6	4.60	7.7	4.4	3.17
			22	14.7	4.9	4.33	14.3	4.8	4.67	13.8	4.6	5.00	11.1	3.7	4.75	8.4	2.8	3.28
		25	16	13.0	11.2	4.08	12.6	10.8	4.40	12.2	10.6	4.72	9.9	9.1	4.48	7.4	7.1	3.09
			19	13.8	8.8	4.26	13.5	8.6	4.59	13.1	8.4	4.92	10.5	7.0	4.67	8.0	5.7	3.22
			22	15.2	6.6	4.41	14.8	6.5	4.75	14.3	6.2	5.09	11.5	5.1	4.84	8.7	4.0	3.33
		27	16	13.4	13.0	4.15	13.0	12.7	4.47	12.6	12.3	4.79	10.2	10.2	4.55	7.7	7.7	3.14
			19	14.3	10.6	4.33	13.9	10.3	4.66	13.5	10.2	5.00	10.9	8.6	4.75	8.2	7.0	3.27
			22	15.7	8.3	4.48	15.3	8.2	4.83	14.8	7.9	5.17	11.9	6.6	4.92	9.0	5.3	3.39
		29	16	13.6	13.6	4.16	13.2	13.2	4.48	12.8	12.8	4.81	10.3	10.3	4.57	7.8	7.8	3.15
			19	14.5	12.2	4.34	14.1	12.0	4.68	13.7	11.7	5.01	11.1	10.0	4.76	8.3	7.9	3.28
			22	15.9	10.0	4.49	15.5	9.8	4.84	15.0	9.5	5.19	12.1	8.0	4.93	9.1	6.5	3.40
		32	16	13.8	13.8	4.17	13.4	13.4	4.49	13.0	13.0	4.82	10.5	10.5	4.58	7.9	7.9	3.15
			19	14.7	12.4	4.35	14.3	12.2	4.69	13.9	11.9	5.02	11.2	10.1	4.77	8.5	8.1	3.29
			22	16.2	10.2	4.50	15.7	9.9	4.85	15.2	9.6	5.20	12.3	8.2	4.94	9.3	6.6	3.40
S-140PF1E5A U-140PEY1E8	220V 230V 240V 50Hz 3phase	23	16	14.1	10.2	4.87	14.1	10.3	5.23	13.6	9.9	5.56	12.6	9.6	5.79	9.2	7.5	4.73
			19	15.1	7.9	5.08	15.1	8.0	5.46	14.5	7.7	5.80	13.5	7.3	6.04	9.8	5.5	4.93
			22	16.5	5.6	5.25	16.5	5.5	5.64	15.9	5.4	6.00	14.8	5.0	6.25	10.8	3.6	5.10
		25	16	14.6	12.1	4.95	14.6	12.1	5.32	14.0	11.7	5.66	13.1	11.5	5.88	9.5	8.9	4.81
			19	15.6	9.7	5.16	15.6	9.7	5.55	15.0	9.3	5.90	13.9	9.0	6.14	10.2	7.0	5.02
			22	17.1	7.3	5.34	17.1	7.3	5.74	16.4	7.0	6.11	15.3	6.7	6.35	11.2	5.0	5.19
		27	16	15.1	14.0	5.03	15.1	14.0	5.41	14.5	13.6	5.75	13.5	13.4	5.98	9.9	9.9	4.89
			19	16.1	11.5	5.25	16.1	11.6	5.64	15.5	11.2	6.00	14.4	10.9	6.24	10.5	8.5	5.10
			22	17.7	9.2	5.43	17.7	9.1	5.83	17.0	8.9	6.21	15.8	8.4	6.46	11.5	6.5	5.28
		29	16	15.3	15.3	5.05	15.3	15.3	5.42	14.7	14.7	5.77	13.7	13.7	6.00	10.0	10.0	4.90
			19	16.4	13.3	5.26	16.4	13.4	5.65	15.7	12.9	6.01	14.6	12.6	6.26	10.7	10.0	5.11
			22	17.9	10.9	5.44	17.9	10.9	5.85	17.2	10.5	6.22	16.0	10.2	6.47	11.7	8.0	5.29
		32	16	15.5	15.5	5.06	15.5	15.5	5.43	14.9	14.9	5.78	13.9	13.9	6.01	10.2	10.2	4.91
			19	16.6	13.5	5.28	16.6	13.6	5.67	16.0	13.1	6.03	14.8	12.8	6.27	10.9	10.2	5.13
			22	18.2	11.0	5.46	18.2	11.1	5.86	17.5	10.7	6.24	16.3	10.4	6.49	11.9	8.1	5.30

1-13. Capacity Table

1. Cooling Capacity Performance Data

□Combination of Multiple Unit

Low Silhouette Ducted Type

TC :Cooling Capacity
SHC :Sensible Heat Capacity
IPT :Cooling Power Consumption

unit : kW

Model	Power Source	Ambient Return Air		Outdoor air intake temp(℃ D.B.)														
				25℃			30℃			35℃			40℃			43℃		
		DB	WB	TC	SHC	IPT	TC	SHC	IPT	TC	SHC	IPT	TC	SHC	IPT	TC	SHC	IPT
S-36PF1E5A×2 U-71PEY1E5	220V 230V 240V 50Hz 1phase	23	16	7.9	6.9	2.65	7.5	6.6	2.91	7.2	6.6	3.16	6.1	5.6	2.78	5.5	5.3	2.53
			19	8.5	5.0	2.76	8.1	4.8	3.03	7.7	4.7	3.29	6.5	4.0	2.89	5.9	3.7	2.64
			22	9.2	3.1	2.87	8.8	3.0	3.15	8.4	2.8	3.42	7.1	2.4	3.01	6.4	2.1	2.74
		25	16	7.9	7.9	2.65	7.5	7.5	2.91	7.2	7.2	3.16	6.1	6.1	2.78	5.5	5.5	2.53
			19	8.5	6.2	2.76	8.1	6.0	3.03	7.7	5.7	3.29	6.5	5.0	2.89	5.9	4.8	2.64
			22	9.2	4.3	2.87	8.8	4.1	3.15	8.4	4.0	3.42	7.1	3.5	3.01	6.4	3.2	2.74
		27	16	7.9	7.9	2.65	7.5	7.5	2.91	7.2	7.2	3.16	6.1	6.1	2.78	5.5	5.5	2.53
			19	8.5	7.5	2.76	8.1	7.2	3.03	7.7	6.9	3.29	6.5	6.1	2.89	5.9	5.7	2.64
			22	9.2	5.5	2.87	8.8	5.4	3.15	8.4	5.2	3.42	7.1	4.5	3.01	6.4	4.2	2.74
		29	16	7.9	7.9	2.65	7.5	7.5	2.91	7.2	7.2	3.16	6.1	6.1	2.78	5.5	5.5	2.53
			19	8.5	8.5	2.76	8.1	8.1	3.03	7.7	7.7	3.29	6.5	6.5	2.89	5.9	5.9	2.64
			22	9.2	6.8	2.87	8.8	6.6	3.15	8.4	6.5	3.42	7.1	5.7	3.01	6.4	5.3	2.74
		32	16	7.9	7.9	2.65	7.5	7.5	2.91	7.2	7.2	3.16	6.1	6.1	2.78	5.5	5.5	2.53
			19	8.5	8.5	2.76	8.1	8.1	3.03	7.7	7.7	3.29	6.5	6.5	2.89	5.9	5.9	2.64
			22	9.2	6.8	2.87	8.8	6.6	3.15	8.4	6.5	3.42	7.1	5.7	3.01	6.4	5.3	2.74
S-50PF1E5A×2 U-100PEY1E5 (U-100PEY1E8)	220V 230V 240V 50Hz 1phase (3phase)	23	16	11.1	8.9	3.37	10.6	8.5	3.63	10.1	8.2	3.90	8.5	7.2	3.70	6.1	5.6	2.55
			19	11.9	6.7	3.52	11.3	6.3	3.79	10.7	6.0	4.06	9.1	5.3	3.86	6.5	4.0	2.66
			22	13.0	4.4	3.64	12.4	4.2	3.92	11.8	3.9	4.20	10.0	3.4	3.99	7.2	2.4	2.75
		25	16	11.5	10.7	3.43	11.0	10.2	3.70	10.4	9.8	3.96	8.8	8.8	3.76	6.3	6.3	2.59
			19	12.3	8.3	3.58	11.7	7.9	3.85	11.1	7.5	4.13	9.4	6.8	3.93	6.8	5.3	2.71
			22	13.5	6.1	3.70	12.8	5.7	3.99	12.2	5.5	4.27	10.3	4.8	4.06	7.4	3.5	2.80
		27	16	11.9	11.9	3.49	11.3	11.3	3.76	10.8	10.8	4.03	9.1	9.1	3.83	6.6	6.6	2.64
			19	12.7	10.2	3.64	12.1	9.7	3.92	11.5	9.3	4.20	9.8	8.4	3.99	7.0	6.5	2.75
			22	13.9	7.8	3.76	13.3	7.5	4.05	12.6	7.2	4.35	10.7	6.3	4.13	7.7	4.9	2.85
		29	16	12.1	12.1	3.50	11.5	11.5	3.77	10.9	10.9	4.04	9.3	9.3	3.84	6.7	6.7	2.64
			19	12.9	11.9	3.65	12.3	11.3	3.93	11.7	10.9	4.21	9.9	9.9	4.00	7.1	7.1	2.76
			22	14.1	9.5	3.77	13.5	9.1	4.06	12.8	8.8	4.36	10.9	7.8	4.14	7.8	6.1	2.85
		32	16	12.3	12.3	3.50	11.7	11.7	3.78	11.1	11.1	4.05	9.4	9.4	3.84	6.8	6.8	2.65
			19	13.1	12.1	3.65	12.5	11.5	3.94	11.8	11.0	4.22	10.1	10.1	4.01	7.2	7.2	2.76
			22	14.3	9.6	3.78	13.7	9.2	4.07	13.0	8.9	4.37	11.0	7.9	4.15	7.9	6.1	2.86
S-60PF1E5A×2 U-125PEY1E5 (U-125PEY1E8)	220V 230V 240V 50Hz 1phase (3phase)	23	16	12.5	10.4	4.02	12.2	10.1	4.33	11.8	9.8	4.64	9.5	8.4	4.41	7.2	6.8	3.04
			19	13.4	7.6	4.19	13.0	7.4	4.51	12.6	7.2	4.84	10.2	6.0	4.60	7.7	4.9	3.17
			22	14.7	4.9	4.33	14.3	4.7	4.67	13.8	4.6	5.00	11.1	3.7	4.75	8.4	2.8	3.28
		25	16	13.0	12.5	4.08	12.6	12.1	4.40	12.2	11.8	4.72	9.9	9.9	4.48	7.4	7.4	3.09
			19	13.8	9.6	4.26	13.5	9.4	4.59	13.1	9.1	4.92	10.5	7.7	4.67	8.0	6.4	3.22
			22	15.2	7.0	4.41	14.8	6.7	4.75	14.3	6.5	5.09	11.5	5.4	4.84	8.7	4.3	3.33
		27	16	13.4	13.4	4.15	13.0	13.0	4.47	12.6	12.6	4.79	10.2	10.2	4.55	7.7	7.7	3.14
			19	14.3	11.8	4.33	13.9	11.5	4.66	13.5	11.2	5.00	10.9	9.6	4.75	8.2	7.7	3.27
			22	15.7	9.1	4.48	15.3	8.7	4.83	14.8	8.6	5.17	11.9	7.2	4.92	9.0	5.8	3.39
		29	16	13.6	13.6	4.16	13.2	13.2	4.48	12.8	12.8	4.81	10.3	10.3	4.57	7.8	7.8	3.15
			19	14.5	13.8	4.34	14.1	13.4	4.68	13.7	13.2	5.01	11.1	11.1	4.76	8.3	8.3	3.28
			22	15.9	11.2	4.49	15.5	10.8	4.84	15.0	10.5	5.19	12.1	8.9	4.93	9.1	7.3	3.40
		32	16	13.8	13.8	4.17	13.4	13.4	4.49	13.0	13.0	4.82	10.5	10.5	4.58	7.9	7.9	3.15
			19	14.7	14.0	4.35	14.3	13.6	4.69	13.9	13.3	5.02	11.2	11.2	4.77	8.5	8.5	3.29
			22	16.2	11.4	4.50	15.7	11.0	4.85	15.2	10.7	5.20	12.3	9.1	4.94	9.3	7.5	3.40
S-71PF1E5A×2 U-140PEY1E8	220V 230V 240V 50Hz 3phase	23	16	14.1	11.0	4.87	14.1	11.0	5.23	13.6	10.8	5.56	12.6	10.4	5.79	9.2	8.2	4.73
			19	15.1	8.2	5.08	15.1	8.3	5.46	14.5	8.0	5.80	13.5	7.7	6.04	9.8	5.9	4.93
			22	16.5	5.5	5.25	16.5	5.5	5.64	15.9	5.3	6.00	14.8	4.9	6.25	10.8	3.6	5.10
		25	16	14.6	13.1	4.95	14.6	13.2	5.32	14.0	12.9	5.66	13.1	12.6	5.88	9.5	9.3	4.81
			19	15.6	10.4	5.16	15.6	10.3	5.55	15.0	10.0	5.90	13.9	9.7	6.14	10.2	7.6	5.02
			22	17.1	7.5	5.34	17.1	7.6	5.74	16.4	7.3	6.11	15.3	6.9	6.35	11.2	5.3	5.19
		27	16	15.1	15.1	5.03	15.1	15.1	5.41	14.5	14.5	5.75	13.5	13.5	5.98	9.9	9.9	4.89
			19	16.1	12.5	5.25	16.1	12.6	5.64	15.5	12.2	6.00	14.4	11.9	6.24	10.5	9.4	5.10
			22	17.7	9.7	5.43	17.7	9.7	5.83	17.0	9.4	6.21	15.8	9.0	6.46	11.5	7.0	5.28
		29	16	15.3	15.3	5.05	15.3	15.3	5.42	14.7	14.7	5.77	13.7	13.7	6.00	10.0	10.0	4.90
			19	16.4	14.6	5.26	16.4	14.7	5.65	15.7	14.1	6.01	14.6	13.9	6.26	10.7	10.4	5.11
			22	17.9	11.7	5.44	17.9	11.8	5.85	17.2	11.5	6.22	16.0	11.2	6.47	11.7	8.8	5.29
		32	16	15.5	15.5	5.06	15.5	15.5	5.43	14.9	14.9	5.78	13.9	13.9	6.01	10.2	10.2	4.91
			19	16.6	14.7	5.28	16.6	14.8	5.67	16.0	14.4	6.03	14.8	14.1	6.27	10.9	10.6	5.13
			22	18.2	11.9	5.46	18.2	12.0	5.86	17.5	11.7	6.24	16.3	11.4	6.49	11.9	8.9	5.30

1-13. Capacity Table

1. Cooling Capacity Performance Data

□Combination of Single Unit

Ducted Type

TC :Cooling Capacity
SHC :Sensible Heat Capacity
IPT :Cooling Power Consumption

unit : kW

Model	Power Source	Ambient Return Air		Outdoor air intake temp(□C D.B.)														
				25□C			30□C			35□C			40□C			43□C		
		DB	WB	TC	SHC	IPT	TC	SHC	IPT	TC	SHC	IPT	TC	SHC	IPT	TC	SHC	IPT
S-60PN1E5A U-60PEY1E5	220V 230V 240V 50Hz 1phase	23	16	7.1	5.9	2.37	6.8	5.8	2.60	6.5	5.6	2.82	5.5	4.7	2.48	5.0	4.4	2.26
			19	7.7	4.3	2.47	7.3	4.2	2.70	7.0	4.1	2.94	5.9	3.5	2.59	5.4	3.2	2.36
			22	8.4	2.8	2.57	8.0	2.7	2.81	7.6	2.6	3.06	6.5	2.2	2.69	5.9	2.0	2.45
		25	16	7.1	7.0	2.37	6.8	6.7	2.60	6.5	6.5	2.82	5.5	5.5	2.48	5.0	5.0	2.26
			19	7.7	5.4	2.47	7.3	5.2	2.70	7.0	5.0	2.94	5.9	4.3	2.59	5.4	4.0	2.36
			22	8.4	3.8	2.57	8.0	3.7	2.81	7.6	3.6	3.06	6.5	3.0	2.69	5.9	2.8	2.45
		27	16	7.1	7.1	2.37	6.8	6.8	2.60	6.5	6.5	2.82	5.5	5.5	2.48	5.0	5.0	2.26
			19	7.7	6.4	2.47	7.3	6.1	2.70	7.0	6.0	2.94	5.9	5.2	2.59	5.4	4.8	2.36
			22	8.4	4.9	2.57	8.0	4.7	2.81	7.6	4.5	3.06	6.5	3.9	2.69	5.9	3.6	2.45
		29	16	7.1	7.1	2.37	6.8	6.8	2.60	6.5	6.5	2.82	5.5	5.5	2.48	5.0	5.0	2.26
			19	7.7	7.3	2.47	7.3	7.1	2.70	7.0	7.0	2.94	5.9	5.9	2.59	5.4	5.4	2.36
			22	8.4	5.9	2.57	8.0	5.7	2.81	7.6	5.5	3.06	6.5	4.9	2.69	5.9	4.5	2.45
		32	16	7.1	7.1	2.37	6.8	6.8	2.60	6.5	6.5	2.82	5.5	5.5	2.48	5.0	5.0	2.26
			19	7.7	7.3	2.47	7.3	7.1	2.70	7.0	7.0	2.94	5.9	5.9	2.59	5.4	5.4	2.36
			22	8.4	5.9	2.57	8.0	5.7	2.81	7.6	5.5	3.06	6.5	4.9	2.69	5.9	4.5	2.45
S-71PN1E5A U-71PEY1E5	220V 230V 240V 50Hz 1phase	23	16	7.9	6.1	2.60	7.5	5.9	2.85	7.2	5.7	3.10	6.1	5.0	2.73	5.5	4.6	2.49
			19	8.5	4.6	2.71	8.1	4.4	2.97	7.7	4.2	3.23	6.5	3.7	2.84	5.9	3.4	2.59
			22	9.2	3.1	2.82	8.8	3.0	3.09	8.4	2.8	3.36	7.1	2.4	2.95	6.4	2.1	2.69
		25	16	7.9	7.0	2.60	7.5	6.8	2.85	7.2	6.7	3.10	6.1	5.7	2.73	5.5	5.3	2.49
			19	8.5	5.6	2.71	8.1	5.3	2.97	7.7	5.1	3.23	6.5	4.5	2.84	5.9	4.2	2.59
			22	9.2	4.0	2.82	8.8	3.9	3.09	8.4	3.7	3.36	7.1	3.2	2.95	6.4	2.9	2.69
		27	16	7.9	7.9	2.60	7.5	7.5	2.85	7.2	7.2	3.10	6.1	6.1	2.73	5.5	5.5	2.49
			19	8.5	6.5	2.71	8.1	6.3	2.97	7.7	6.1	3.23	6.5	5.2	2.84	5.9	5.0	2.59
			22	9.2	4.9	2.82	8.8	4.8	3.09	8.4	4.7	3.36	7.1	4.0	2.95	6.4	3.7	2.69
		29	16	7.9	7.9	2.60	7.5	7.5	2.85	7.2	7.2	3.10	6.1	6.1	2.73	5.5	5.5	2.49
			19	8.5	7.5	2.71	8.1	7.2	2.97	7.7	6.9	3.23	6.5	6.1	2.84	5.9	5.7	2.59
			22	9.2	6.0	2.82	8.8	5.7	3.09	8.4	5.6	3.36	7.1	4.9	2.95	6.4	4.6	2.69
		32	16	7.9	7.9	2.60	7.5	7.5	2.85	7.2	7.2	3.10	6.1	6.1	2.73	5.5	5.5	2.49
			19	8.5	7.5	2.71	8.1	7.2	2.97	7.7	6.9	3.23	6.5	6.1	2.84	5.9	5.7	2.59
			22	9.2	6.0	2.82	8.8	5.7	3.09	8.4	5.6	3.36	7.1	4.9	2.95	6.4	4.6	2.69

1-13. Capacity Table

1. Cooling Capacity Performance Data

□Combination of Single Unit

Ducted Type

TC :Cooling Capacity
SHC :Sensible Heat Capacity
IPT :Cooling Power Consumption

unit : kW

Model	Power Source	Ambient Return Air		Outdoor air intake temp(□C D.B.)														
				25□C			30□C			35□C			40□C			43□C		
		DB	WB	TC	SHC	IPT	TC	SHC	IPT	TC	SHC	IPT	TC	SHC	IPT	TC	SHC	IPT
S-100PN1E5A U-100PEY1E5 (U-100PEY1E8)	220V 230V 240V 50Hz 1phase (3phase)	23	16	11.1	8.9	3.45	10.6	8.5	3.72	10.1	8.2	3.99	8.5	7.2	3.79	6.1	5.6	2.61
			19	11.9	6.7	3.60	11.3	6.3	3.88	10.7	6.1	4.16	9.1	5.4	3.95	6.5	4.0	2.72
			22	13.0	4.5	3.73	12.4	4.3	4.01	11.8	4.0	4.30	10.0	3.5	4.09	7.2	2.5	2.82
		25	16	11.5	10.7	3.51	11.0	10.2	3.78	10.4	9.8	4.06	8.8	8.7	3.85	6.3	6.3	2.66
			19	12.3	8.3	3.66	11.7	7.9	3.95	11.1	7.7	4.23	9.4	6.8	4.02	6.8	5.3	2.77
			22	13.5	6.2	3.79	12.8	5.9	4.08	12.2	5.6	4.38	10.3	4.8	4.16	7.4	3.6	2.87
		27	16	11.9	11.9	3.57	11.3	11.3	3.85	10.8	10.8	4.12	9.1	9.1	3.92	6.6	6.6	2.70
			19	12.7	10.2	3.72	12.1	9.7	4.01	11.5	9.3	4.30	9.8	8.4	4.09	7.0	6.5	2.82
			22	13.9	7.9	3.85	13.3	7.6	4.15	12.6	7.2	4.45	10.7	6.3	4.23	7.7	4.9	2.91
		29	16	12.1	12.1	3.58	11.5	11.5	3.86	10.9	10.9	4.13	9.3	9.3	3.93	6.7	6.7	2.71
			19	12.9	11.9	3.73	12.3	11.3	4.02	11.7	10.9	4.31	9.9	9.8	4.10	7.1	7.1	2.82
			22	14.1	9.5	3.86	13.5	9.1	4.16	12.8	8.8	4.46	10.9	7.8	4.24	7.8	6.1	2.92
		32	16	12.3	12.3	3.59	11.7	11.7	3.86	11.1	11.1	4.14	9.4	9.4	3.94	6.8	6.8	2.71
			19	13.1	12.1	3.74	12.5	11.5	4.03	11.8	11.0	4.32	10.1	10.0	4.11	7.2	7.2	2.83
			22	14.3	9.6	3.87	13.7	9.2	4.17	13.0	8.9	4.47	11.0	7.9	4.25	7.9	6.1	2.93
S-125PN1E5A U-125PEY1E5 (U-125PEY1E8)	220V 230V 240V 50Hz 1phase (3phase)	23	16	12.5	9.6	4.18	12.2	9.3	4.50	11.8	9.0	4.82	9.5	7.7	4.58	7.2	6.2	3.16
			19	13.4	7.3	4.36	13.0	7.1	4.69	12.6	6.9	5.03	10.2	5.8	4.78	7.7	4.6	3.29
			22	14.7	5.0	4.51	14.3	4.9	4.86	13.8	4.7	5.20	11.1	3.8	4.95	8.4	2.9	3.41
		25	16	13.0	11.3	4.25	12.6	11.1	4.57	12.2	10.8	4.90	9.9	9.3	4.66	7.4	7.2	3.21
			19	13.8	8.9	4.43	13.5	8.8	4.77	13.1	8.6	5.12	10.5	7.2	4.86	8.0	5.8	3.35
			22	15.2	6.7	4.58	14.8	6.6	4.94	14.3	6.3	5.29	11.5	5.2	5.03	8.7	4.1	3.47
		27	16	13.4	13.2	4.32	13.0	12.9	4.65	12.6	12.6	4.99	10.2	10.2	4.74	7.7	7.7	3.26
			19	14.3	10.8	4.50	13.9	10.5	4.85	13.5	10.3	5.20	10.9	8.7	4.94	8.2	7.1	3.41
			22	15.7	8.6	4.66	15.3	8.3	5.02	14.8	8.1	5.38	11.9	6.7	5.11	9.0	5.4	3.52
		29	16	13.6	13.6	4.33	13.2	13.2	4.66	12.8	12.8	5.00	10.3	10.3	4.75	7.8	7.8	3.27
			19	14.5	12.5	4.51	14.1	12.1	4.86	13.7	11.9	5.21	11.1	10.2	4.95	8.3	8.0	3.41
			22	15.9	10.2	4.67	15.5	9.9	5.03	15.0	9.7	5.39	12.1	8.1	5.12	9.1	6.6	3.53
		32	16	13.8	13.8	4.34	13.4	13.4	4.67	13.0	13.0	5.01	10.5	10.5	4.76	7.9	7.9	3.28
			19	14.7	12.6	4.52	14.3	12.3	4.88	13.9	12.1	5.23	11.2	10.3	4.97	8.5	8.2	3.42
			22	16.2	10.4	4.68	15.7	10.0	5.04	15.2	9.9	5.41	12.3	8.3	5.14	9.3	6.8	3.54
S-140PN1E5A U-140PEY1E8	220V 230V 240V 50Hz 3phase	23	16	14.1	10.4	4.87	14.1	10.5	5.23	13.6	10.1	5.56	12.6	9.8	5.79	9.2	7.7	4.73
			19	15.1	8.0	5.08	15.1	8.1	5.46	14.5	7.8	5.80	13.5	7.4	6.04	9.8	5.6	4.93
			22	16.5	5.7	5.25	16.5	5.6	5.64	15.9	5.5	6.00	14.8	5.1	6.25	10.8	3.7	5.10
		25	16	14.6	12.3	4.95	14.6	12.4	5.32	14.0	11.9	5.66	13.1	11.7	5.88	9.5	9.0	4.81
			19	15.6	9.8	5.16	15.6	9.9	5.55	15.0	9.5	5.90	13.9	9.2	6.14	10.2	7.2	5.02
			22	17.1	7.4	5.34	17.1	7.5	5.74	16.4	7.1	6.11	15.3	6.8	6.35	11.2	5.2	5.19
		27	16	15.1	14.2	5.03	15.1	14.3	5.41	14.5	13.9	5.75	13.5	13.5	5.98	9.9	9.9	4.89
			19	16.1	11.7	5.25	16.1	11.8	5.64	15.5	11.4	6.00	14.4	11.1	6.24	10.5	8.7	5.10
			22	17.7	9.3	5.43	17.7	9.4	5.83	17.0	9.0	6.21	15.8	8.7	6.46	11.5	6.7	5.28
		29	16	15.3	15.3	5.05	15.3	15.3	5.42	14.7	14.7	5.77	13.7	13.7	6.00	10.0	10.0	4.90
			19	16.4	13.5	5.26	16.4	13.5	5.65	15.7	13.1	6.01	14.6	12.9	6.26	10.7	10.1	5.11
			22	17.9	11.1	5.44	17.9	11.2	5.85	17.2	10.8	6.22	16.0	10.5	6.47	11.7	8.2	5.29
		32	16	15.5	15.5	5.06	15.5	15.5	5.43	14.9	14.9	5.78	13.9	13.9	6.01	10.2	10.2	4.91
			19	16.6	13.7	5.28	16.6	13.7	5.67	16.0	13.4	6.03	14.8	13.0	6.27	10.9	10.3	5.13
			22	18.2	11.3	5.46	18.2	11.4	5.86	17.5	11.0	6.24	16.3	10.7	6.49	11.9	8.3	5.30

1-13. Capacity Table

1. Cooling Capacity Performance Data

□Combination of Multiple Unit

Ducted Type

TC :Cooling Capacity
SHC :Sensible Heat Capacity
IPT :Cooling Power Consumption

unit : kW

Model	Power Source	Ambient Return Air		Outdoor air intake temp(□C D.B.)														
				25□C			30□C			35□C			40□C			43□C		
		DB	WB	TC	SHC	IPT	TC	SHC	IPT	TC	SHC	IPT	TC	SHC	IPT	TC	SHC	IPT
S-36PN1E5A×2 U-71PEY1E5	220V 230V 240V 50Hz 1phase	23	16	7.9	6.8	2.66	7.5	6.5	2.91	7.2	6.3	3.17	6.1	5.5	2.79	5.5	5.2	2.54
			19	8.5	5.0	2.77	8.1	4.8	3.04	7.7	4.6	3.30	6.5	4.0	2.90	5.9	3.7	2.65
			22	9.2	3.0	2.88	8.8	2.9	3.16	8.4	2.7	3.43	7.1	2.4	3.02	6.4	2.1	2.75
		25	16	7.9	7.9	2.66	7.5	7.5	2.91	7.2	7.2	3.17	6.1	6.1	2.79	5.5	5.5	2.54
			19	8.5	6.1	2.77	8.1	5.9	3.04	7.7	5.7	3.30	6.5	4.9	2.90	5.9	4.7	2.65
			22	9.2	4.3	2.88	8.8	4.1	3.16	8.4	4.0	3.43	7.1	3.4	3.02	6.4	3.1	2.75
		27	16	7.9	7.9	2.66	7.5	7.5	2.91	7.2	7.2	3.17	6.1	6.1	2.79	5.5	5.5	2.54
			19	8.5	7.3	2.77	8.1	7.1	3.04	7.7	6.8	3.30	6.5	5.9	2.90	5.9	5.6	2.65
			22	9.2	5.4	2.88	8.8	5.3	3.16	8.4	5.1	3.43	7.1	4.4	3.02	6.4	4.2	2.75
		29	16	7.9	7.9	2.66	7.5	7.5	2.91	7.2	7.2	3.17	6.1	6.1	2.79	5.5	5.5	2.54
			19	8.5	8.5	2.77	8.1	8.1	3.04	7.7	7.7	3.30	6.5	6.5	2.90	5.9	5.9	2.65
			22	9.2	6.7	2.88	8.8	6.5	3.16	8.4	6.4	3.43	7.1	5.6	3.02	6.4	5.2	2.75
		32	16	7.9	7.9	2.66	7.5	7.5	2.91	7.2	7.2	3.17	6.1	6.1	2.79	5.5	5.5	2.54
			19	8.5	8.5	2.77	8.1	8.1	3.04	7.7	7.7	3.30	6.5	6.5	2.90	5.9	5.9	2.65
			22	9.2	6.7	2.88	8.8	6.5	3.16	8.4	6.4	3.43	7.1	5.6	3.02	6.4	5.2	2.75
S-50PN1E5A×2 U-100PEY1E5 (U-100PEY1E8)	220V 230V 240V 50Hz 1phase (3phase)	23	16	11.1	8.7	3.45	10.6	8.4	3.72	10.1	8.0	3.99	8.5	7.1	3.79	6.1	5.6	2.61
			19	11.9	6.5	3.60	11.3	6.2	3.88	10.7	5.9	4.16	9.1	5.2	3.95	6.5	3.9	2.72
			22	13.0	4.4	3.73	12.4	4.2	4.01	11.8	3.9	4.30	10.0	3.3	4.09	7.2	2.4	2.82
		25	16	11.5	10.6	3.51	11.0	10.1	3.78	10.4	9.6	4.06	8.8	8.6	3.85	6.3	6.2	2.66
			19	12.3	8.2	3.66	11.7	7.8	3.95	11.1	7.4	4.23	9.4	6.7	4.02	6.8	5.2	2.77
			22	13.5	5.9	3.79	12.8	5.6	4.08	12.2	5.5	4.38	10.3	4.7	4.16	7.4	3.5	2.87
		27	16	11.9	11.9	3.57	11.3	11.3	3.85	10.8	10.8	4.12	9.1	9.1	3.92	6.6	6.6	2.70
			19	12.7	10.0	3.72	12.1	9.5	4.01	11.5	9.1	4.30	9.8	8.2	4.09	7.0	6.4	2.82
			22	13.9	7.7	3.85	13.3	7.3	4.15	12.6	7.1	4.45	10.7	6.2	4.23	7.7	4.8	2.91
		29	16	12.1	12.1	3.58	11.5	11.5	3.86	10.9	10.9	4.13	9.3	9.3	3.93	6.7	6.7	2.71
			19	12.9	11.6	3.73	12.3	11.1	4.02	11.7	10.8	4.31	9.9	9.7	4.10	7.1	7.0	2.82
			22	14.1	9.4	3.86	13.5	9.0	4.16	12.8	8.7	4.46	10.9	7.7	4.24	7.8	5.9	2.92
		32	16	12.3	12.3	3.59	11.7	11.7	3.86	11.1	11.1	4.14	9.4	9.4	3.94	6.8	6.8	2.71
			19	13.1	11.8	3.74	12.5	11.3	4.03	11.8	10.9	4.32	10.1	9.9	4.11	7.2	7.1	2.83
			22	14.3	9.5	3.87	13.7	9.1	4.17	13.0	8.8	4.47	11.0	7.8	4.25	7.9	6.0	2.93
S-60PN1E5A×2 U-125PEY1E5 (U-125PEY1E8)	220V 230V 240V 50Hz 1phase (3phase)	23	16	12.5	10.3	4.18	12.2	10.1	4.50	11.8	9.8	4.82	9.5	8.4	4.58	7.2	6.8	3.16
			19	13.4	7.5	4.36	13.0	7.4	4.69	12.6	7.2	5.03	10.2	6.0	4.78	7.7	4.8	3.29
			22	14.7	4.8	4.51	14.3	4.7	4.86	13.8	4.5	5.20	11.1	3.6	4.95	8.4	2.8	3.41
		25	16	13.0	12.5	4.25	12.6	12.2	4.57	12.2	11.9	4.90	9.9	9.9	4.66	7.4	7.4	3.21
			19	13.8	9.6	4.43	13.5	9.4	4.77	13.1	9.2	5.12	10.5	7.7	4.86	8.0	6.3	3.35
			22	15.2	6.9	4.58	14.8	6.7	4.94	14.3	6.5	5.29	11.5	5.4	5.03	8.7	4.2	3.47
		27	16	13.4	13.4	4.32	13.0	13.0	4.65	12.6	12.6	4.99	10.2	10.2	4.74	7.7	7.7	3.26
			19	14.3	11.7	4.50	13.9	11.5	4.85	13.5	11.2	5.20	10.9	9.6	4.94	8.2	7.7	3.41
			22	15.7	9.0	4.66	15.3	8.9	5.02	14.8	8.6	5.38	11.9	7.2	5.11	9.0	5.8	3.52
		29	16	13.6	13.6	4.33	13.2	13.2	4.66	12.8	12.8	5.00	10.3	10.3	4.75	7.8	7.8	3.27
			19	14.5	13.8	4.51	14.1	13.4	4.86	13.7	13.2	5.21	11.1	11.1	4.95	8.3	8.3	3.41
			22	15.9	11.0	4.67	15.5	10.8	5.03	15.0	10.5	5.39	12.1	8.9	5.12	9.1	7.3	3.53
		32	16	13.8	13.8	4.34	13.4	13.4	4.67	13.0	13.0	5.01	10.5	10.5	4.76	7.9	7.9	3.28
			19	14.7	14.0	4.52	14.3	13.6	4.88	13.9	13.3	5.23	11.2	11.2	4.97	8.5	8.5	3.42
			22	16.2	11.2	4.68	15.7	11.0	5.04	15.2	10.7	5.41	12.3	9.1	5.14	9.3	7.5	3.54
S-71PN1E5A×2 U-140PEY1E8	220V 230V 240V 50Hz 3phase	23	16	14.1	11.0	4.87	14.1	11.0	5.23	13.6	10.8	5.56	12.6	10.4	5.79	9.2	8.2	4.73
			19	15.1	8.2	5.08	15.1	8.3	5.46	14.5	8.0	5.80	13.5	7.7	6.04	9.8	5.9	4.93
			22	16.5	5.5	5.25	16.5	5.5	5.64	15.9	5.3	6.00	14.8	4.9	6.25	10.8	3.6	5.10
		25	16	14.6	13.2	4.95	14.6	13.2	5.32	14.0	12.9	5.66	13.1	12.7	5.88	9.5	9.3	4.81
			19	15.6	10.4	5.16	15.6	10.4	5.55	15.0	10.1	5.90	13.9	9.7	6.14	10.2	7.6	5.02
			22	17.1	7.5	5.34	17.1	7.6	5.74	16.4	7.3	6.11	15.3	6.9	6.35	11.2	5.3	5.19
		27	16	15.1	15.1	5.03	15.1	15.1	5.41	14.5	14.5	5.75	13.5	13.5	5.98	9.9	9.9	4.89
			19	16.1	12.5	5.25	16.1	12.6	5.64	15.5	12.2	6.00	14.4	12.0	6.24	10.5	9.5	5.10
			22	17.7	9.8	5.43	17.7	9.7	5.83	17.0	9.5	6.21	15.8	9.1	6.46	11.5	7.0	5.28
		29	16	15.3	15.3	5.05	15.3	15.3	5.42	14.7	14.7	5.77	13.7	13.7	6.00	10.0	10.0	4.90
			19	16.4	14.7	5.26	16.4	14.8	5.65	15.7	14.2	6.01	14.6	14.0	6.26	10.7	10.5	5.11
			22	17.9	11.8	5.44	17.9	11.9	5.85	17.2	11.5	6.22	16.0	11.2	6.47	11.7	8.8	5.29
		32	16	15.5	15.5	5.06	15.5	15.5	5.43	14.9	14.9	5.78	13.9	13.9	6.01	10.2	10.2	4.91
			19	16.6	14.9	5.28	16.6	15.0	5.67	16.0	14.5	6.03	14.8	14.2	6.27	10.9	10.7	5.13
			22	18.2	12.0	5.46	18.2	12.1	5.86	17.5	11.7	6.24	16.3	11.4	6.49	11.9	8.9	5.30

1-13. Capacity Table

2. Heating Capacity Performance Data

TC :Cooling Capacity

IPT :Cooling Power Consumption

unit : kW

□Combination of Single Unit

4-Way Cassette Type

Model	Power Source	Ambient Return Air	Outdoor air intake temp(□C W.B.)									
			-5□C		0□C		6□C		10□C		15□C	
		DB	TC	IPT	TC	IPT	TC	IPT	TC	IPT	TC	IPT
S-50PU1E5A U-50PE1E5	220V 230V 240V 50Hz 1 phase	16	4.6	1.79	4.9	1.84	6.7	2.19	8.3	2.62	8.8	2.51
		20	4.4	1.89	4.7	1.94	6.5	2.30	8.0	2.75	8.5	2.64
		24	4.3	1.94	4.5	2.00	6.2	2.37	7.7	2.84	8.2	2.72
S-60PU1E5A U-60PE1E5A	220V 230V 240V 50Hz 1 phase	16	7.3	2.43	7.5	2.45	8.6	2.44	8.8	2.32	8.8	2.17
		20	7.0	2.51	7.2	2.52	8.0	2.48	8.0	2.36	8.0	2.21
		24	6.6	2.58	6.8	2.60	7.2	2.52	7.2	2.40	7.2	2.25
S-71PU1E5A U-71PE1E5A (U-71PE1E8A)	220V 230V 240V 50Hz 1 phase (3 phase)	16	8.2	2.88	8.5	2.90	9.7	2.86	9.9	2.67	9.9	2.47
		20	7.8	2.96	8.1	2.98	9.0	2.90	9.0	2.72	9.0	2.49
		24	7.4	3.05	7.7	3.07	8.1	2.96	8.1	2.78	8.1	2.55
S-100PU1E5A U-100PE1E5A (U-100PE1E8A)	220V 230V 240V 50Hz 1 phase (3 phase)	16	15.1	4.97	15.1	4.77	15.1	4.16	15.1	3.66	15.1	3.10
		20	14.0	5.26	14.0	5.05	14.0	4.40	14.0	3.87	14.0	3.28
		24	13.1	5.34	13.1	5.13	13.1	4.47	13.1	3.94	13.1	3.33
S-125PU1E5A U-125PE1E5A (U-125PE1E8A)	220V 230V 240V 50Hz 1 phase (3 phase)	16	16.7	5.52	17.2	5.43	17.3	4.91	17.3	4.33	17.3	3.66
		20	15.5	5.84	15.9	5.74	16.0	5.20	16.0	4.58	16.0	3.87
		24	14.5	5.93	14.9	5.84	15.0	5.28	15.0	4.65	15.0	3.94
S-140PU1E5A U-140PE1E5A (U-140PE1E8A)	220V 230V 240V 50Hz 1 phase (3 phase)	16	18.1	5.72	19.2	5.69	19.4	5.57	19.4	4.91	19.4	4.15
		20	16.7	6.05	17.8	6.02	18.0	5.90	18.0	5.19	18.0	4.40
		24	15.7	6.15	16.7	6.12	16.9	6.00	16.9	5.28	16.9	4.47

1-13. Capacity Table

2. Heating Capacity Performance Data

□Combination of Multiple Unit

4-Way Cassette Type

TC :Cooling Capacity

IPT :Cooling Power Consumption

unit : kW

Model	Power Source	Ambient Return Air	Outdoor air intake temp(□C W.B.)									
			-5□C		0□C		6□C		10□C		15□C	
		DB	TC	IPT	TC	IPT	TC	IPT	TC	IPT	TC	IPT
S-36PU1E5A×2 U-71PE1E5A (U-71PE1E8A)	220V 230V 240V 50Hz 1 phase (3 phase)	16	8.2	2.88	8.5	2.90	9.7	2.86	9.9	2.67	9.9	2.47
		20	7.8	2.96	8.1	2.98	9.0	2.90	9.0	2.72	9.0	2.49
		24	7.4	3.05	7.7	3.07	8.1	2.96	8.1	2.78	8.1	2.55
S-36PU1E5A×3 U-100PE1E5A (U-100PE1E8A)	220V 230V 240V 50Hz 1 phase (3 phase)	16	15.1	4.97	15.1	4.77	15.1	4.16	15.1	3.66	15.1	3.10
		20	14.0	5.26	14.0	5.05	14.0	4.40	14.0	3.87	14.0	3.28
		24	13.1	5.34	13.1	5.13	13.1	4.47	13.1	3.94	13.1	3.33
S-50PU1E5A×2 U-100PE1E5A (U-100PE1E8A)	220V 230V 240V 50Hz 1 phase (3 phase)	16	15.1	4.97	15.1	4.77	15.1	4.16	15.1	3.66	15.1	3.10
		20	14.0	5.26	14.0	5.05	14.0	4.40	14.0	3.87	14.0	3.28
		24	13.1	5.34	13.1	5.13	13.1	4.47	13.1	3.94	13.1	3.33
S-36PU1E5A×4 U-125PE1E5A (U-125PE1E8A)	220V 230V 240V 50Hz 1 phase (3 phase)	16	16.7	5.52	17.2	5.43	17.3	4.91	17.3	4.33	17.3	3.66
		20	15.5	5.84	15.9	5.74	16.0	5.20	16.0	4.58	16.0	3.87
		24	14.5	5.93	14.9	5.84	15.0	5.28	15.0	4.65	15.0	3.94
S-45PU1E5A×3 U-125PE1E5A (U-125PE1E8A)	220V 230V 240V 50Hz 1 phase (3 phase)	16	16.7	5.52	17.2	5.43	17.3	4.91	17.3	4.33	17.3	3.66
		20	15.5	5.84	15.9	5.74	16.0	5.20	16.0	4.58	16.0	3.87
		24	14.5	5.93	14.9	5.84	15.0	5.28	15.0	4.65	15.0	3.94
S-60PU1E5A×2 U-125PE1E5A (U-125PE1E8A)	220V 230V 240V 50Hz 1 phase (3 phase)	16	16.7	5.52	17.2	5.43	17.3	4.91	17.3	4.33	17.3	3.66
		20	15.5	5.84	15.9	5.74	16.0	5.20	16.0	4.58	16.0	3.87
		24	14.5	5.93	14.9	5.84	15.0	5.28	15.0	4.65	15.0	3.94
S-50PU1E5A×3 U-140PE1E5A (U-140PE1E8A)	220V 230V 240V 50Hz 1 phase (3 phase)	16	18.1	5.72	19.2	5.69	19.4	5.57	19.4	4.91	19.4	4.15
		20	16.7	6.05	17.8	6.02	18.0	5.90	18.0	5.19	18.0	4.40
		24	15.7	6.15	16.7	6.12	16.9	6.00	16.9	5.28	16.9	4.47
S-71PU1E5A×2 U-140PE1E5A (U-140PE1E8A)	220V 230V 240V 50Hz 1 phase (3 phase)	16	18.1	5.72	19.2	5.69	19.4	5.57	19.4	4.91	19.4	4.15
		20	16.7	6.05	17.8	6.02	18.0	5.90	18.0	5.19	18.0	4.40
		24	15.7	6.15	16.7	6.12	16.9	6.00	16.9	5.28	16.9	4.47

1-13. Capacity Table

2. Heating Capacity Performance Data

TC :Cooling Capacity

IPT :Cooling Power Consumption

unit : kW

□Combination of Single Unit

Ceiling Type

Model	Power Source	Ambient Return Air	Outdoor air intake temp(□C W.B.)									
			-5□C		0□C		6□C		10□C		15□C	
		DB	TC	IPT	TC	IPT	TC	IPT	TC	IPT	TC	IPT
S-50PT2E5A U-50PE1E5	220V 230V 240V 50Hz 1phase	16	4.6	1.79	4.9	1.84	6.7	2.19	8.3	2.62	8.8	2.51
		20	4.4	1.89	4.7	1.94	6.5	2.30	8.0	2.75	8.5	2.64
		24	4.3	1.94	4.5	2.00	6.2	2.37	7.7	2.84	8.2	2.72
S-60PT2E5A U-60PE1E5A	220V 230V 240V 50Hz 1phase	16	7.3	2.43	7.5	2.45	8.6	2.44	8.8	2.32	8.8	2.17
		20	7.0	2.51	7.2	2.52	8.0	2.48	8.0	2.36	8.0	2.21
		24	6.6	2.58	6.8	2.60	7.2	2.52	7.2	2.40	7.2	2.25
S-71PT2E5A U-71PE1E5A (U-71PE1E8A)	220V 230V 240V 50Hz 1phase (3 phase)	16	8.2	2.88	8.5	2.90	9.7	2.86	9.9	2.67	9.9	2.47
		20	7.8	2.96	8.1	2.98	9.0	2.90	9.0	2.72	9.0	2.49
		24	7.4	3.05	7.7	3.07	8.1	2.96	8.1	2.78	8.1	2.55
S-100PT2E5A U-100PE1E5A (U-100PE1E8A)	220V 230V 240V 50Hz 1phase (3 phase)	16	15.1	4.97	15.1	4.77	15.1	4.16	15.1	3.66	15.1	3.10
		20	14.0	5.26	14.0	5.05	14.0	4.40	14.0	3.87	14.0	3.28
		24	13.1	5.34	13.1	5.13	13.1	4.47	13.1	3.94	13.1	3.33
S-125PT2E5A U-125PE1E5A (U-125PE1E8A)	220V 230V 240V 50Hz 1phase (3 phase)	16	16.7	5.53	17.2	5.44	17.3	4.92	17.3	4.34	17.3	3.67
		20	15.5	5.85	15.9	5.75	16.0	5.21	16.0	4.59	16.0	3.88
		24	14.5	5.94	14.9	5.85	15.0	5.29	15.0	4.66	15.0	3.94
S-140PT2E5A U-140PE1E5A (U-140PE1E8A)	220V 230V 240V 50Hz 1phase (3 phase)	16	18.1	5.75	19.2	5.72	19.4	5.60	19.4	4.93	19.4	4.17
		20	16.7	6.08	17.8	6.06	18.0	5.93	18.0	5.22	18.0	4.42
		24	15.7	6.18	16.7	6.15	16.9	6.03	16.9	5.30	16.9	4.49

1-13. Capacity Table

2. Heating Capacity Performance Data

□Combination of Multiple Unit

Ceiling Type

TC :Cooling Capacity

IPT :Cooling Power Consumption

unit : kW

Model	Power Source	Ambient Return Air	Outdoor air intake temp(□C W.B.)									
			-5□C		0□C		6□C		10□C		15□C	
		DB	TC	IPT	TC	IPT	TC	IPT	TC	IPT	TC	IPT
S-36PT2E5A×2 U-71PE1E5A (U-71PE1E8A)	220V 230V 240V 50Hz 1phase (3 phase)	16	8.2	2.88	8.5	2.90	9.7	2.86	9.9	2.67	9.9	2.47
		20	7.8	2.96	8.1	2.98	9.0	2.90	9.0	2.72	9.0	2.49
		24	7.4	3.05	7.7	3.07	8.1	2.96	8.1	2.78	8.1	2.55
S-36PT2E5A×3 U-100PE1E5A (U-100PE1E8A)	220V 230V 240V 50Hz 1phase (3 phase)	16	15.1	4.97	15.1	4.77	15.1	4.16	15.1	3.66	15.1	3.10
		20	14.0	5.26	14.0	5.05	14.0	4.40	14.0	3.87	14.0	3.28
		24	13.1	5.34	13.1	5.13	13.1	4.47	13.1	3.94	13.1	3.33
S-50PT2E5A×2 U-100PE1E5A (U-100PE1E8A)	220V 230V 240V 50Hz 1phase (3 phase)	16	15.1	4.97	15.1	4.77	15.1	4.16	15.1	3.66	15.1	3.10
		20	14.0	5.26	14.0	5.05	14.0	4.40	14.0	3.87	14.0	3.28
		24	13.1	5.34	13.1	5.13	13.1	4.47	13.1	3.94	13.1	3.33
S-36PT2E5A×4 U-125PE1E5A (U-125PE1E8A)	220V 230V 240V 50Hz 1phase (3 phase)	16	16.7	5.53	17.2	5.44	17.3	4.92	17.3	4.34	17.3	3.67
		20	15.5	5.85	15.9	5.75	16.0	5.21	16.0	4.59	16.0	3.88
		24	14.5	5.94	14.9	5.85	15.0	5.29	15.0	4.66	15.0	3.94
S-45PT2E5A×3 U-125PE1E5A (U-125PE1E8A)	220V 230V 240V 50Hz 1phase (3 phase)	16	16.7	5.53	17.2	5.44	17.3	4.92	17.3	4.34	17.3	3.67
		20	15.5	5.85	15.9	5.75	16.0	5.21	16.0	4.59	16.0	3.88
		24	14.5	5.94	14.9	5.85	15.0	5.29	15.0	4.66	15.0	3.94
S-60PT2E5A×2 U-125PE1E5A (U-125PE1E8A)	220V 230V 240V 50Hz 1phase (3 phase)	16	16.7	5.53	17.2	5.44	17.3	4.92	17.3	4.34	17.3	3.67
		20	15.5	5.85	15.9	5.75	16.0	5.21	16.0	4.59	16.0	3.88
		24	14.5	5.94	14.9	5.85	15.0	5.29	15.0	4.66	15.0	3.94
S-50PT2E5A×3 U-140PE1E5A (U-140PE1E8A)	220V 230V 240V 50Hz 1phase (3 phase)	16	18.1	5.75	19.2	5.72	19.4	5.60	19.4	4.93	19.4	4.17
		20	16.7	6.08	17.8	6.06	18.0	5.93	18.0	5.22	18.0	4.42
		24	15.7	6.18	16.7	6.15	16.9	6.03	16.9	5.30	16.9	4.49
S-71PT2E5A×2 U-140PE1E5A (U-140PE1E8A)	220V 230V 240V 50Hz 1phase (3 phase)	16	18.1	5.75	19.2	5.72	19.4	5.60	19.4	4.93	19.4	4.17
		20	16.7	6.08	17.8	6.06	18.0	5.93	18.0	5.22	18.0	4.42
		24	15.7	6.18	16.7	6.15	16.9	6.03	16.9	5.30	16.9	4.49

1-13. Capacity Table

2. Heating Capacity Performance Data

TC :Cooling Capacity

IPT :Cooling Power Consumption

□Combination of Single Unit

Wall Mounted Type

unit : kW

Model	Power Source	Ambient Return Air	Outdoor air intake temp(□C W.B.)									
			-5□C		0□C		6□C		10□C		15□C	
		DB	TC	IPT	TC	IPT	TC	IPT	TC	IPT	TC	IPT
S-50PK1E5A U-50PE1E5	220V 230V 240V 50Hz 1 phase	16	4.6	1.91	4.9	1.96	6.7	2.33	8.3	2.79	8.8	2.67
		20	4.4	2.01	4.7	2.06	6.5	2.45	8.0	2.93	8.5	2.81
		24	4.3	2.07	4.5	2.13	6.2	2.52	7.7	3.02	8.2	2.89
S-60PK1E5A U-60PE1E5A	220V 230V 240V 50Hz 1 phase	16	7.3	2.43	7.5	2.45	8.6	2.44	8.8	2.32	8.8	2.17
		20	7.0	2.51	7.2	2.52	8.0	2.48	8.0	2.36	8.0	2.21
		24	6.6	2.58	6.8	2.60	7.2	2.52	7.2	2.40	7.2	2.25
S-71PK1E5A U-71PE1E5A (U-71PE1E8A)	220V 230V 240V 50Hz 1 phase (3 phase)	16	8.2	2.88	8.5	2.90	9.7	2.86	9.9	2.67	9.9	2.47
		20	7.8	2.96	8.1	2.98	9.0	2.90	9.0	2.72	9.0	2.49
		24	7.4	3.05	7.7	3.07	8.1	2.96	8.1	2.78	8.1	2.55
S-100PK1E5A U-100PE1E5A (U-100PE1E8A)	220V 230V 240V 50Hz 1 phase (3 phase)	16	12.4	3.78	12.4	3.63	12.4	3.17	12.4	2.79	12.4	2.36
		20	11.5	4.00	11.5	3.85	11.5	3.35	11.5	2.95	11.5	2.50
		24	10.8	4.07	10.8	3.91	10.8	3.40	10.8	3.00	10.8	2.54

1-13. Capacity Table

2. Heating Capacity Performance Data

□Combination of Multiple Unit

Wall Mounted Type

TC :Cooling Capacity

IPT :Cooling Power Consumption

unit : kW

Model	Power Source	Ambient Return Air	Outdoor air intake temp(□C W.B.)									
			-5□C		0□C		6□C		10□C		15□C	
		DB	TC	IPT	TC	IPT	TC	IPT	TC	IPT	TC	IPT
S-36PK1E5A×2 U-71PE1E5A (U-71PE1E8A)	220V 230V 240V 50Hz 1 phase (3 phase)	16	8.2	2.88	8.5	2.90	9.7	2.86	9.9	2.67	9.9	2.47
		20	7.8	2.96	8.1	2.98	9.0	2.90	9.0	2.72	9.0	2.49
		24	7.4	3.05	7.7	3.07	8.1	2.96	8.1	2.78	8.1	2.55
S-36PK1E5A×3 U-100PE1E5A (U-100PE1E8A)	220V 230V 240V 50Hz 1 phase (3 phase)	16	15.1	4.97	15.1	4.77	15.1	4.16	15.1	3.66	15.1	3.10
		20	14.0	5.26	14.0	5.05	14.0	4.40	14.0	3.87	14.0	3.28
		24	13.1	5.34	13.1	5.13	13.1	4.47	13.1	3.94	13.1	3.33
S-50PK1E5A×2 U-100PE1E5A (U-100PE1E8A)	220V 230V 240V 50Hz 1 phase (3 phase)	16	15.1	4.97	15.1	4.77	15.1	4.16	15.1	3.66	15.1	3.10
		20	14.0	5.26	14.0	5.05	14.0	4.40	14.0	3.87	14.0	3.28
		24	13.1	5.34	13.1	5.13	13.1	4.47	13.1	3.94	13.1	3.33
S-36PK1E5A×4 U-125PE1E5A (U-125PE1E8A)	220V 230V 240V 50Hz 1 phase (3 phase)	16	16.7	5.52	17.2	5.43	17.3	4.91	17.3	4.33	17.3	3.66
		20	15.5	5.84	15.9	5.74	16.0	5.20	16.0	4.58	16.0	3.87
		24	14.5	5.93	14.9	5.84	15.0	5.28	15.0	4.65	15.0	3.94
S-45PK1E5A×3 U-125PE1E5A (U-125PE1E8A)	220V 230V 240V 50Hz 1 phase (3 phase)	16	16.7	5.52	17.2	5.43	17.3	4.91	17.3	4.33	17.3	3.66
		20	15.5	5.84	15.9	5.74	16.0	5.20	16.0	4.58	16.0	3.87
		24	14.5	5.93	14.9	5.84	15.0	5.28	15.0	4.65	15.0	3.94
S-60PK1E5A×2 U-125PE1E5A (U-125PE1E8A)	220V 230V 240V 50Hz 1 phase (3 phase)	16	16.7	5.52	17.2	5.43	17.3	4.91	17.3	4.33	17.3	3.66
		20	15.5	5.84	15.9	5.74	16.0	5.20	16.0	4.58	16.0	3.87
		24	14.5	5.93	14.9	5.84	15.0	5.28	15.0	4.65	15.0	3.94
S-50PK1E5A×3 U-140PE1E5A (U-140PE1E8A)	220V 230V 240V 50Hz 1 phase (3 phase)	16	18.1	5.72	19.2	5.69	19.4	5.57	19.4	4.91	19.4	4.15
		20	16.7	6.05	17.8	6.02	18.0	5.90	18.0	5.19	18.0	4.40
		24	15.7	6.15	16.7	6.12	16.9	6.00	16.9	5.28	16.9	4.47
S-71PK1E5A×2 U-140PE1E5A (U-140PE1E8A)	220V 230V 240V 50Hz 1 phase (3 phase)	16	18.1	5.72	19.2	5.69	19.4	5.57	19.4	4.91	19.4	4.15
		20	16.7	6.05	17.8	6.02	18.0	5.90	18.0	5.19	18.0	4.40
		24	15.7	6.15	16.7	6.12	16.9	6.00	16.9	5.28	16.9	4.47

1-13. Capacity Table

2. Heating Capacity Performance Data

TC :Cooling Capacity

IPT :Cooling Power Consumption

□Combination of Single Unit

Low Sihouette Ducted Type

unit : kW

Model	Power Source	Ambient Return Air	Outdoor air intake temp(□C W.B.)									
			-5□C		0□C		6□C		10□C		15□C	
		DB	TC	IPT	TC	IPT	TC	IPT	TC	IPT	TC	IPT
S-50PF1E5A U-50PE1E5	220V 230V 240V 50Hz 1 phase	16	4.6	1.87	4.9	1.92	6.7	2.28	8.3	2.73	8.8	2.62
		20	4.4	1.97	4.7	2.02	6.5	2.40	8.0	2.87	8.5	2.75
		24	4.3	2.03	4.5	2.08	6.2	2.47	7.7	2.96	8.2	2.84
S-60PF1E5A U-60PE1E5A	220V 230V 240V 50Hz 1 phase	16	7.3	2.43	7.5	2.45	8.6	2.44	8.8	2.32	8.8	2.17
		20	7.0	2.51	7.2	2.52	8.0	2.48	8.0	2.36	8.0	2.21
		24	6.6	2.58	6.8	2.60	7.2	2.52	7.2	2.40	7.2	2.25
S-71PF1E5A U-71PE1E5A (U-71PE1E8A)	220V 230V 240V 50Hz 1 phase (3 phase)	16	8.2	2.88	8.5	2.90	9.7	2.86	9.9	2.67	9.9	2.47
		20	7.8	2.96	8.1	2.98	9.0	2.90	9.0	2.72	9.0	2.49
		24	7.4	3.05	7.7	3.07	8.1	2.96	8.1	2.78	8.1	2.55
S-100PF1E5A U-100PE1E5A (U-100PE1E8A)	220V 230V 240V 50Hz 1 phase (3 phase)	16	15.1	4.97	15.1	4.77	15.1	4.16	15.1	3.66	15.1	3.10
		20	14.0	5.26	14.0	5.05	14.0	4.40	14.0	3.87	14.0	3.28
		24	13.1	5.34	13.1	5.13	13.1	4.47	13.1	3.94	13.1	3.33
S-125PF1E5A U-125PE1E5A (U-125PE1E8A)	220V 230V 240V 50Hz 1 phase (3 phase)	16	16.7	5.52	17.2	5.43	17.3	4.91	17.3	4.33	17.3	3.66
		20	15.5	5.84	15.9	5.74	16.0	5.20	16.0	4.58	16.0	3.87
		24	14.5	5.93	14.9	5.84	15.0	5.28	15.0	4.65	15.0	3.94
S-140PF1E5A U-140PE1E5A (U-140PE1E8A)	220V 230V 240V 50Hz 1 phase (3 phase)	16	18.1	5.72	19.2	5.69	19.4	5.57	19.4	4.91	19.4	4.15
		20	16.7	6.05	17.8	6.02	18.0	5.90	18.0	5.19	18.0	4.40
		24	15.7	6.15	16.7	6.12	16.9	6.00	16.9	5.28	16.9	4.47

1-13. Capacity Table

2. Heating Capacity Performance Data

□Combination of Multiple Unit

Low Silhouette Ducted Type

TC :Cooling Capacity

IPT :Cooling Power Consumption

unit : kW

Model	Power Source	Ambient Return Air	Outdoor air intake temp(□C W.B.)									
			-5□C		0□C		6□C		10□C		15□C	
		DB	TC	IPT	TC	IPT	TC	IPT	TC	IPT	TC	IPT
S-36PF1E5A×2 U-71PE1E5A (U-71PE1E8A)	220V 230V 240V 50Hz 1 phase (3 phase)	16	8.2	2.88	8.5	2.90	9.7	2.86	9.9	2.67	9.9	2.47
		20	7.8	2.96	8.1	2.98	9.0	2.90	9.0	2.72	9.0	2.49
		24	7.4	3.05	7.7	3.07	8.1	2.96	8.1	2.78	8.1	2.55
S-36PF1E5A×3 U-100PE1E5A (U-100PE1E8A)	220V 230V 240V 50Hz 1 phase (3 phase)	16	15.1	4.97	15.1	4.77	15.1	4.16	15.1	3.66	15.1	3.10
		20	14.0	5.26	14.0	5.05	14.0	4.40	14.0	3.87	14.0	3.28
		24	13.1	5.34	13.1	5.13	13.1	4.47	13.1	3.94	13.1	3.33
S-50PF1E5A×2 U-100PE1E5A (U-100PE1E8A)	220V 230V 240V 50Hz 1 phase (3 phase)	16	15.1	4.97	15.1	4.77	15.1	4.16	15.1	3.66	15.1	3.10
		20	14.0	5.26	14.0	5.05	14.0	4.40	14.0	3.87	14.0	3.28
		24	13.1	5.34	13.1	5.13	13.1	4.47	13.1	3.94	13.1	3.33
S-36PF1E5A×4 U-125PE1E5A (U-125PE1E8A)	220V 230V 240V 50Hz 1 phase (3 phase)	16	16.7	5.52	17.2	5.43	17.3	4.91	17.3	4.33	17.3	3.66
		20	15.5	5.84	15.9	5.74	16.0	5.20	16.0	4.58	16.0	3.87
		24	14.5	5.93	14.9	5.84	15.0	5.28	15.0	4.65	15.0	3.94
S-45PF1E5A×3 U-125PE1E5A (U-125PE1E8A)	220V 230V 240V 50Hz 1 phase (3 phase)	16	16.7	5.52	17.2	5.43	17.3	4.91	17.3	4.33	17.3	3.66
		20	15.5	5.84	15.9	5.74	16.0	5.20	16.0	4.58	16.0	3.87
		24	14.5	5.93	14.9	5.84	15.0	5.28	15.0	4.65	15.0	3.94
S-60PF1E5A×2 U-125PE1E5A (U-125PE1E8A)	220V 230V 240V 50Hz 1 phase (3 phase)	16	16.7	5.52	17.2	5.43	17.3	4.91	17.3	4.33	17.3	3.66
		20	15.5	5.84	15.9	5.74	16.0	5.20	16.0	4.58	16.0	3.87
		24	14.5	5.93	14.9	5.84	15.0	5.28	15.0	4.65	15.0	3.94
S-50PF1E5A×3 U-140PE1E5A (U-140PE1E8A)	220V 230V 240V 50Hz 1 phase (3 phase)	16	18.1	5.72	19.2	5.69	19.4	5.57	19.4	4.91	19.4	4.15
		20	16.7	6.05	17.8	6.02	18.0	5.90	18.0	5.19	18.0	4.40
		24	15.7	6.15	16.7	6.12	16.9	6.00	16.9	5.28	16.9	4.47
S-71PF1E5A×2 U-140PE1E5A (U-140PE1E8A)	220V 230V 240V 50Hz 1 phase (3 phase)	16	18.1	5.72	19.2	5.69	19.4	5.57	19.4	4.91	19.4	4.15
		20	16.7	6.05	17.8	6.02	18.0	5.90	18.0	5.19	18.0	4.40
		24	15.7	6.15	16.7	6.12	16.9	6.00	16.9	5.28	16.9	4.47

1-13. Capacity Table

2. Heating Capacity Performance Data

TC :Cooling Capacity

IPT :Cooling Power Consumption

unit : kW

□Combination of Single Unit

Ducted Type

Model	Power Source	Ambient Return Air	Outdoor air intake temp(□C W.B.)									
			-5□C		0□C		6□C		10□C		15□C	
		DB	TC	IPT	TC	IPT	TC	IPT	TC	IPT	TC	IPT
S-50PN1E5A U-50PE1E5	220V 230V 240V 50Hz 1 phase	16	4.4	1.96	4.7	2.02	6.5	2.39	8.0	2.87	8.5	2.75
		20	4.3	2.07	4.6	2.12	6.3	2.52	7.8	3.02	8.3	2.89
		24	4.1	2.13	4.4	2.19	6.0	2.60	7.5	3.11	7.9	2.98
S-60PN1E5A U-60PE1E5A	220V 230V 240V 50Hz 1 phase	16	7.3	2.54	7.5	2.55	8.6	2.55	8.8	2.42	8.8	2.27
		20	7.0	2.61	7.2	2.63	8.0	2.59	8.0	2.46	8.0	2.31
		24	6.6	2.69	6.8	2.71	7.2	2.62	7.2	2.50	7.2	2.34
S-71PN1E5A U-71PE1E5A (U-71PE1E8A)	220V 230V 240V 50Hz 1 phase (3 phase)	16	8.2	2.90	8.5	2.92	9.7	2.88	9.9	2.69	9.9	2.48
		20	7.8	2.98	8.1	3.00	9.0	2.92	9.0	2.74	9.0	2.51
		24	7.4	3.07	7.7	3.09	8.1	2.98	8.1	2.79	8.1	2.57
S-100PN1E5A U-100PE1E5A (U-100PE1E8A)	220V 230V 240V 50Hz 1 phase (3 phase)	16	15.1	5.08	15.1	4.88	15.1	4.25	15.1	3.74	15.1	3.17
		20	14.0	5.38	14.0	5.17	14.0	4.50	14.0	3.96	14.0	3.35
		24	13.1	5.46	13.1	5.25	13.1	4.57	13.1	4.03	13.1	3.41
S-125PN1E5A U-125PE1E5A (U-125PE1E8A)	220V 230V 240V 50Hz 1 phase (3 phase)	16	16.7	5.73	17.2	5.64	17.3	5.10	17.3	4.49	17.3	3.80
		20	15.5	6.06	15.9	5.96	16.0	5.40	16.0	4.75	16.0	4.02
		24	14.5	6.16	14.9	6.06	15.0	5.49	15.0	4.83	15.0	4.09
S-140PN1E5A U-140PE1E5A (U-140PE1E8A)	220V 230V 240V 50Hz 1 phase (3 phase)	16	18.1	5.91	19.2	5.89	19.4	5.76	19.4	5.08	19.4	4.29
		20	16.7	6.26	17.8	6.23	18.0	6.10	18.0	5.37	18.0	4.54
		24	15.7	6.36	16.7	6.33	16.9	6.20	16.9	5.46	16.9	4.62

1-13. Capacity Table

2. Heating Capacity Performance Data

□Combination of Multiple Unit

Ducted Type

TC :Cooling Capacity

IPT :Cooling Power Consumption

unit : kW

Model	Power Source	Ambient Return Air	Outdoor air intake temp(□C W.B.)									
			-5□C		0□C		6□C		10□C		15□C	
		DB	TC	IPT	TC	IPT	TC	IPT	TC	IPT	TC	IPT
S-36PN1E5A×2 U-71PE1E5A (U-71PE1E8A)	220V 230V 240V 50Hz 1 phase (3 phase)	16	8.2	2.90	8.5	2.92	9.7	2.88	9.9	2.69	9.9	2.48
		20	7.8	2.98	8.1	3.00	9.0	2.92	9.0	2.74	9.0	2.51
		24	7.4	3.07	7.7	3.09	8.1	2.98	8.1	2.79	8.1	2.57
S-36PN1E5A×3 U-100PE1E5A (U-100PE1E8A)	220V 230V 240V 50Hz 1 phase (3 phase)	16	15.1	5.08	15.1	4.88	15.1	4.25	15.1	3.74	15.1	3.17
		20	14.0	5.38	14.0	5.17	14.0	4.50	14.0	3.96	14.0	3.35
		24	13.1	5.46	13.1	5.25	13.1	4.57	13.1	4.03	13.1	3.41
S-50PN1E5A×2 U-100PE1E5A (U-100PE1E8A)	220V 230V 240V 50Hz 1 phase (3 phase)	16	15.1	5.08	15.1	4.88	15.1	4.25	15.1	3.74	15.1	3.17
		20	14.0	5.38	14.0	5.17	14.0	4.50	14.0	3.96	14.0	3.35
		24	13.1	5.46	13.1	5.25	13.1	4.57	13.1	4.03	13.1	3.41
S-36PN1E5A×4 U-125PE1E5A (U-125PE1E8A)	220V 230V 240V 50Hz 1 phase (3 phase)	16	16.7	5.73	17.2	5.64	17.3	5.10	17.3	4.49	17.3	3.80
		20	15.5	6.06	15.9	5.96	16.0	5.40	16.0	4.75	16.0	4.02
		24	14.5	6.16	14.9	6.06	15.0	5.49	15.0	4.83	15.0	4.09
S-45PN1E5A×3 U-125PE1E5A (U-125PE1E8A)	220V 230V 240V 50Hz 1 phase (3 phase)	16	16.7	5.73	17.2	5.64	17.3	5.10	17.3	4.49	17.3	3.80
		20	15.5	6.06	15.9	5.96	16.0	5.40	16.0	4.75	16.0	4.02
		24	14.5	6.16	14.9	6.06	15.0	5.49	15.0	4.83	15.0	4.09
S-60PN1E5A×2 U-125PE1E5A (U-125PE1E8A)	220V 230V 240V 50Hz 1 phase (3 phase)	16	16.7	5.73	17.2	5.64	17.3	5.10	17.3	4.49	17.3	3.80
		20	15.5	6.06	15.9	5.96	16.0	5.40	16.0	4.75	16.0	4.02
		24	14.5	6.16	14.9	6.06	15.0	5.49	15.0	4.83	15.0	4.09
S-50PN1E5A×3 U-140PE1E5A (U-140PE1E8A)	220V 230V 240V 50Hz 1 phase (3 phase)	16	18.1	5.91	19.2	5.89	19.4	5.76	19.4	5.08	19.4	4.29
		20	16.7	6.26	17.8	6.23	18.0	6.10	18.0	5.37	18.0	4.54
		24	15.7	6.36	16.7	6.33	16.9	6.20	16.9	5.46	16.9	4.62
S-71PN1E5A×2 U-140PE1E5A (U-140PE1E8A)	220V 230V 240V 50Hz 1 phase (3 phase)	16	18.1	5.91	19.2	5.89	19.4	5.76	19.4	5.08	19.4	4.29
		20	16.7	6.26	17.8	6.23	18.0	6.10	18.0	5.37	18.0	4.54
		24	15.7	6.36	16.7	6.33	16.9	6.20	16.9	5.46	16.9	4.62

1-13. Capacity Table

2. Heating Capacity Performance Data

TC :Cooling Capacity

IPT :Cooling Power Consumption

unit : kW

□Combination of Single Unit

4-Way Cassette Type

Model	Power Source	Ambient Return Air	Outdoor air intake temp(□C W.B.)									
			-5□C		0□C		6□C		10□C		15□C	
		DB	TC	IPT	TC	IPT	TC	IPT	TC	IPT	TC	IPT
S-60PU1E5A U-60PEY1E5	220V 230V 240V 50Hz 1 phase	16	5.6	1.89	5.9	1.92	7.2	2.05	8.3	2.29	9.5	2.50
		20	5.4	1.98	5.7	2.02	7.0	2.16	8.1	2.41	9.2	2.63
		24	5.2	2.04	5.5	2.08	6.7	2.22	7.8	2.48	8.8	2.71
S-71PU1E5A U-71PEY1E5	220V 230V 240V 50Hz 1 phase	16	5.6	1.95	6.1	2.04	8.3	2.38	9.4	2.59	10.6	2.80
		20	5.5	2.05	6.0	2.14	8.1	2.51	9.1	2.73	10.2	2.95
		24	5.2	2.11	5.7	2.21	7.8	2.59	8.7	2.81	9.8	3.03
S-100PU1E5A U-100PEY1E5 (U-100PEY1E8)	220V 230V 240V 50Hz 1 phase (3 phase)	16	13.4	4.37	13.9	3.95	14.9	3.78	13.9	2.87	15.6	3.00
		20	12.4	4.63	12.9	4.19	13.8	4.00	12.9	3.03	14.5	3.18
		24	11.6	4.70	12.1	4.25	12.9	4.06	12.0	3.08	13.5	3.23
S-125PU1E5A U-125PEY1E5 (U-125PEY1E8)	220V 230V 240V 50Hz 1 phase (3 phase)	16	14.5	4.81	15.2	4.35	16.2	4.16	15.1	3.15	17.0	3.30
		20	13.5	5.09	14.0	4.60	15.0	4.40	14.0	3.34	15.7	3.50
		24	12.6	5.17	13.1	4.68	14.0	4.47	13.1	3.39	14.7	3.55
S-140PU1E5A U-140PEY1E8	220V 230V 240V 50Hz 3phase	16	16.7	5.52	17.2	5.43	17.3	4.91	17.3	4.33	17.3	3.66
		20	15.5	5.84	15.9	5.74	16.0	5.20	16.0	4.58	16.0	3.87
		24	14.5	5.93	14.9	5.84	15.0	5.28	15.0	4.65	15.0	3.94

1-13. Capacity Table

2. Heating Capacity Performance Data

□Combination of Multiple Unit

4-Way Cassette Type

TC :Cooling Capacity

IPT :Cooling Power Consumption

unit : kW

Model	Power Source	Ambient Return Air	Outdoor air intake temp(□C W.B.)									
			-5□C		0□C		6□C		10□C		15□C	
		DB	TC	IPT	TC	IPT	TC	IPT	TC	IPT	TC	IPT
S-36PU1E5A×2 U-71PEY1E5	220V 230V 240V 50Hz 1 phase	16	5.6	1.95	6.1	2.04	8.3	2.38	9.4	2.59	10.6	2.80
		20	5.5	2.05	6.0	2.14	8.1	2.51	9.1	2.73	10.2	2.95
		24	5.2	2.11	5.7	2.21	7.8	2.59	8.7	2.81	9.8	3.03
S-50PU1E5A×2 U-100PEY1E5 (U-100PEY1E8)	220V 230V 240V 50Hz 1 phase (3 phase)	16	13.4	4.37	13.9	3.95	14.9	3.78	13.9	2.87	15.6	3.00
		20	12.4	4.63	12.9	4.19	13.8	4.00	12.9	3.03	14.5	3.18
		24	11.6	4.70	12.1	4.25	12.9	4.06	12.0	3.08	13.5	3.23
S-60PU1E5A×2 U-125PEY1E5 (U-125PEY1E8)	220V 230V 240V 50Hz 1 phase (3 phase)	16	14.5	4.81	15.2	4.35	16.2	4.16	15.1	3.15	17.0	3.30
		20	13.5	5.09	14.0	4.60	15.0	4.40	14.0	3.34	15.7	3.50
		24	12.6	5.17	13.1	4.68	14.0	4.47	13.1	3.39	14.7	3.55
S-71PU1E5A×2 U-140PEY1E8	220V 230V 240V 50Hz 3phase	16	16.7	5.52	17.2	5.43	17.3	4.91	17.3	4.33	17.3	3.66
		20	15.5	5.84	15.9	5.74	16.0	5.20	16.0	4.58	16.0	3.87
		24	14.5	5.93	14.9	5.84	15.0	5.28	15.0	4.65	15.0	3.94

1-13. Capacity Table

2. Heating Capacity Performance Data

TC :Cooling Capacity

IPT :Cooling Power Consumption

unit : kW

□Combination of Single Unit

Ceiling Type

Model	Power Source	Ambient Return Air	Outdoor air intake temp(□C W.B.)									
			-5□C		0□C		6□C		10□C		15□C	
		DB	TC	IPT	TC	IPT	TC	IPT	TC	IPT	TC	IPT
S-60PT2E5A U-60PEY1E5	220V 230V 240V 50Hz 1phase	16	5.6	1.89	5.9	1.92	7.2	2.05	8.3	2.29	9.5	2.50
		20	5.4	1.98	5.7	2.02	7.0	2.16	8.1	2.41	9.2	2.63
		24	5.2	2.04	5.5	2.08	6.7	2.22	7.8	2.48	8.8	2.71
S-71PT2E5A U-71PEY1E5	220V 230V 240V 50Hz 1phase	16	5.6	1.95	6.1	2.04	8.3	2.38	9.4	2.59	10.6	2.80
		20	5.5	2.05	6.0	2.14	8.1	2.51	9.1	2.73	10.2	2.95
		24	5.2	2.11	5.7	2.21	7.8	2.59	8.7	2.81	9.8	3.03
S-100PT2E5A U-100PEY1E5 (U-100PEY1E8)	220V 230V 240V 50Hz 1phase (3 phase)	16	13.4	4.37	13.9	3.95	14.9	3.78	13.9	2.87	15.6	3.00
		20	12.4	4.63	12.9	4.19	13.8	4.00	12.9	3.03	14.5	3.18
		24	11.6	4.70	12.1	4.25	12.9	4.06	12.0	3.08	13.5	3.23
S-125PT2E5A U-125PEY1E5 (U-125PEY1E8)	220V 230V 240V 50Hz 1phase (3 phase)	16	14.5	4.81	15.2	4.35	16.2	4.16	15.1	3.15	17.0	3.30
		20	13.5	5.09	14.0	4.60	15.0	4.40	14.0	3.34	15.7	3.50
		24	12.6	5.17	13.1	4.68	14.0	4.47	13.1	3.39	14.7	3.55
S-140PT2E5A U-140PEY1E8	220V 230V 240V 50Hz 3phase	16	16.7	5.53	17.2	5.44	17.3	4.92	17.3	4.34	17.3	3.67
		20	15.5	5.85	15.9	5.75	16.0	5.21	16.0	4.59	16.0	3.88
		24	14.5	5.94	14.9	5.85	15.0	5.29	15.0	4.66	15.0	3.94

1-13. Capacity Table

2. Heating Capacity Performance Data

□Combination of Multiple Unit

Ceiling Type

TC :Cooling Capacity

IPT :Cooling Power Consumption

unit : kW

Model	Power Source	Ambient Return Air	Outdoor air intake temp(□C W.B.)									
			-5□C		0□C		6□C		10□C		15□C	
		DB	TC	IPT	TC	IPT	TC	IPT	TC	IPT	TC	IPT
S-36PT2E5A×2 U-71PEY1E5	220V 230V 240V 50Hz 1phase	16	5.6	1.95	6.1	2.04	8.3	2.38	9.4	2.59	10.6	2.80
		20	5.5	2.05	6.0	2.14	8.1	2.51	9.1	2.73	10.2	2.95
		24	5.2	2.11	5.7	2.21	7.8	2.59	8.7	2.81	9.8	3.03
S-50PT2E5A×2 U-100PEY1E5 (U-100PEY1E8)	220V 230V 240V 50Hz 1phase (3 phase)	16	13.4	4.37	13.9	3.95	14.9	3.78	13.9	2.87	15.6	3.00
		20	12.4	4.63	12.9	4.19	13.8	4.00	12.9	3.03	14.5	3.18
		24	11.6	4.70	12.1	4.25	12.9	4.06	12.0	3.08	13.5	3.23
S-60PT2E5A×2 U-125PEY1E5 (U-125PEY1E8)	220V 230V 240V 50Hz 1phase (3 phase)	16	14.5	4.81	15.2	4.35	16.2	4.16	15.1	3.15	17.0	3.30
		20	13.5	5.09	14.0	4.60	15.0	4.40	14.0	3.34	15.7	3.50
		24	12.6	5.17	13.1	4.68	14.0	4.47	13.1	3.39	14.7	3.55
S-71PT2E5A×2 U-140PEY1E8	220V 230V 240V 50Hz 3phase	16	16.7	5.53	17.2	5.44	17.3	4.92	17.3	4.34	17.3	3.67
		20	15.5	5.85	15.9	5.75	16.0	5.21	16.0	4.59	16.0	3.88
		24	14.5	5.94	14.9	5.85	15.0	5.29	15.0	4.66	15.0	3.94

1-13. Capacity Table

2. Heating Capacity Performance Data

TC :Cooling Capacity

IPT :Cooling Power Consumption

□Combination of Single Unit

Wall Mounted Type

unit : kW

Model	Power Source	Ambient Return Air	Outdoor air intake temp(□C W.B.)									
			-5□C		0□C		6□C		10□C		15□C	
		DB	TC	IPT	TC	IPT	TC	IPT	TC	IPT	TC	IPT
S-60PK1E5A U-60PEY1E5	220V 230V 240V 50Hz 1 phase	16	5.6	1.92	5.9	1.96	7.2	2.09	8.3	2.34	9.5	2.55
		20	5.4	2.03	5.7	2.07	7.0	2.20	8.1	2.46	9.2	2.68
		24	5.2	2.09	5.5	2.13	6.7	2.27	7.8	2.53	8.8	2.76
S-71PK1E5A U-71PEY1E5	220V 230V 240V 50Hz 1 phase	16	5.6	1.98	6.1	2.07	8.3	2.42	9.4	2.63	10.6	2.84
		20	5.5	2.08	6.0	2.18	8.1	2.55	9.1	2.77	10.2	2.99
		24	5.2	2.14	5.7	2.24	7.8	2.63	8.7	2.85	9.8	3.08
S-100PK1E5A U-100PEY1E5 (U-100PEY1E8)	220V 230V 240V 50Hz 1 phase (3 phase)	16	10.2	3.28	10.6	2.97	11.3	2.83	10.6	2.15	11.9	2.25
		20	9.4	3.47	9.8	3.14	10.5	3.00	9.8	2.28	11.0	2.38
		24	8.8	3.53	9.2	3.19	9.8	3.05	9.2	2.31	10.3	2.42

1-13. Capacity Table

2. Heating Capacity Performance Data

□Combination of Multiple Unit

Wall Mounted Type

TC :Cooling Capacity
IPT :Cooling Power Consumption
unit : kW

Model	Power Source	Ambient Return Air	Outdoor air intake temp(□C W.B.)									
			-5□C		0□C		6□C		10□C		15□C	
		DB	TC	IPT	TC	IPT	TC	IPT	TC	IPT	TC	IPT
S-36PK1E5A×2 U-71PEY1E5	220V 230V 240V 50Hz 1 phase	16	5.6	1.98	6.1	2.07	8.3	2.42	9.4	2.63	10.6	2.84
		20	5.5	2.08	6.0	2.18	8.1	2.55	9.1	2.77	10.2	2.99
		24	5.2	2.14	5.7	2.24	7.8	2.63	8.7	2.85	9.8	3.08
S-50PK1E5A×2 U-100PEY1E5 (U-100PEY1E8)	220V 230V 240V 50Hz 1 phase (3 phase)	16	12.0	4.37	12.5	3.95	13.4	3.78	12.5	2.87	14.0	3.00
		20	11.1	4.63	11.6	4.19	12.4	4.00	11.6	3.03	13.0	3.18
		24	10.4	4.70	10.9	4.25	11.6	4.06	10.8	3.08	12.2	3.23
S-60PK1E5A×2 U-125PEY1E5 (U-125PEY1E8)	220V 230V 240V 50Hz 1 phase (3 phase)	16	14.5	5.25	15.2	4.75	16.2	4.54	15.1	3.44	17.0	3.60
		20	13.5	5.55	14.0	5.02	15.0	4.80	14.0	3.64	15.7	3.81
		24	12.6	5.64	13.1	5.10	14.0	4.88	13.1	3.70	14.7	3.88
S-71PK1E5A×2 U-140PEY1E8	220V 230V 240V 50Hz 3phase	16	16.1	5.04	17.1	5.02	17.3	4.91	17.3	4.33	17.3	3.66
		20	14.9	5.33	15.8	5.31	16.0	5.20	16.0	4.58	16.0	3.87
		24	13.9	5.42	14.8	5.40	15.0	5.28	15.0	4.65	15.0	3.94

1-13. Capacity Table

2. Heating Capacity Performance Data

TC :Cooling Capacity

IPT :Cooling Power Consumption

unit : kW

□Combination of Single Unit

Low Silhouette Ducted Type

Model	Power Source	Ambient Return Air	Outdoor air intake temp(□C W.B.)									
			-5□C		0□C		6□C		10□C		15□C	
		DB	TC	IPT	TC	IPT	TC	IPT	TC	IPT	TC	IPT
S-60PF1E5A U-60PEY1E5	220V 230V 240V 50Hz 1 phase	16	5.6	1.80	5.9	1.83	7.2	1.95	8.3	2.18	9.5	2.38
		20	5.4	1.89	5.7	1.93	7.0	2.06	8.1	2.30	9.2	2.51
		24	5.2	1.95	5.5	1.99	6.7	2.12	7.8	2.37	8.8	2.58
S-71PF1E5A U-71PEY1E5	220V 230V 240V 50Hz 1 phase	16	5.6	1.85	6.1	1.93	8.3	2.26	9.4	2.46	10.6	2.65
		20	5.5	1.94	6.0	2.03	8.1	2.38	9.1	2.59	10.2	2.79
		24	5.2	2.00	5.7	2.09	7.8	2.45	8.7	2.66	9.8	2.88
S-100PF1E5A U-100PEY1E5 (U-100PEY1E8)	220V 230V 240V 50Hz 1 phase (3 phase)	16	13.4	4.37	13.9	3.95	14.9	3.78	13.9	2.87	15.6	3.00
		20	12.4	4.63	12.9	4.19	13.8	4.00	12.9	3.03	14.5	3.18
		24	11.6	4.70	12.1	4.25	12.9	4.06	12.0	3.08	13.5	3.23
S-125PF1E5A U-125PEY1E5 (U-125PEY1E8)	220V 230V 240V 50Hz 1 phase (3 phase)	16	14.5	4.81	15.2	4.35	16.2	4.16	15.1	3.15	17.0	3.30
		20	13.5	5.09	14.0	4.60	15.0	4.40	14.0	3.34	15.7	3.50
		24	12.6	5.17	13.1	4.68	14.0	4.47	13.1	3.39	14.7	3.55
S-140PF1E5A U-140PEY1E8	220V 230V 240V 50Hz 3phase	16	16.7	5.52	17.2	5.43	17.3	4.91	17.3	4.33	17.3	3.66
		20	15.5	5.84	15.9	5.74	16.0	5.20	16.0	4.58	16.0	3.87
		24	14.5	5.93	14.9	5.84	15.0	5.28	15.0	4.65	15.0	3.94

1-13. Capacity Table

2. Heating Capacity Performance Data

TC :Cooling Capacity

IPT :Cooling Power Consumption

□Combination of Multiple Unit

Low Silhouette Ducted Type

unit : kW

Model	Power Source	Ambient Return Air	Outdoor air intake temp(□C W.B.)									
			-5□C		0□C		6□C		10□C		15□C	
		DB	TC	IPT	TC	IPT	TC	IPT	TC	IPT	TC	IPT
S-36PF1E5A×2 U-71PEY1E5	220V 230V 240V 50Hz 1 phase	16	5.6	1.86	6.1	1.95	8.3	2.28	9.4	2.48	10.6	2.68
		20	5.5	1.96	6.0	2.05	8.1	2.40	9.1	2.61	10.2	2.82
		24	5.2	2.02	5.7	2.11	7.8	2.47	8.7	2.69	9.8	2.90
S-50PF1E5A×2 U-100PEY1E5 (U-100PEY1E8)	220V 230V 240V 50Hz 1 phase (3 phase)	16	13.4	4.37	13.9	3.95	14.9	3.78	13.9	2.87	15.6	3.00
		20	12.4	4.63	12.9	4.19	13.8	4.00	12.9	3.03	14.5	3.18
		24	11.6	4.70	12.1	4.25	12.9	4.06	12.0	3.08	13.5	3.23
S-60PF1E5A×2 U-125PEY1E5 (U-125PEY1E8)	220V 230V 240V 50Hz 1 phase (3 phase)	16	14.5	4.81	15.2	4.35	16.2	4.16	15.1	3.15	17.0	3.30
		20	13.5	5.09	14.0	4.60	15.0	4.40	14.0	3.34	15.7	3.50
		24	12.6	5.17	13.1	4.68	14.0	4.47	13.1	3.39	14.7	3.55
S-71PF1E5A×2 U-140PEY1E8	220V 230V 240V 50Hz 3phase	16	16.7	5.52	17.2	5.43	17.3	4.91	17.3	4.33	17.3	3.66
		20	15.5	5.84	15.9	5.74	16.0	5.20	16.0	4.58	16.0	3.87
		24	14.5	5.93	14.9	5.84	15.0	5.28	15.0	4.65	15.0	3.94

1-13. Capacity Table

2. Heating Capacity Performance Data

TC :Cooling Capacity

IPT :Cooling Power Consumption

unit : kW

□Combination of Single Unit

Ducted Type

Model	Power Source	Ambient Return Air	Outdoor air intake temp(□C W.B.)									
			-5□C		0□C		6□C		10□C		15□C	
		DB	TC	IPT	TC	IPT	TC	IPT	TC	IPT	TC	IPT
S-60PN1E5A U-60PEY1E5	220V 230V 240V 50Hz 1 phase	16	5.6	2.12	5.9	2.16	7.2	2.30	8.3	2.57	9.5	2.80
		20	5.4	2.23	5.7	2.27	7.0	2.42	8.1	2.71	9.2	2.95
		24	5.2	2.30	5.5	2.34	6.7	2.49	7.8	2.79	8.8	3.04
S-71PN1E5A U-71PEY1E5	220V 230V 240V 50Hz 1 phase	16	5.6	2.16	6.1	2.26	8.3	2.64	9.4	2.87	10.6	3.10
		20	5.5	2.27	6.0	2.37	8.1	2.78	9.1	3.02	10.2	3.26
		24	5.2	2.34	5.7	2.45	7.8	2.86	8.7	3.11	9.8	3.36
S-100PN1E5A U-100PEY1E5 (U-100PEY1E8)	220V 230V 240V 50Hz 1 phase (3 phase)	16	13.4	4.48	13.9	4.05	14.9	3.87	13.9	2.94	15.6	3.08
		20	12.4	4.74	12.9	4.29	13.8	4.10	12.9	3.11	14.5	3.26
		24	11.6	4.82	12.1	4.36	12.9	4.17	12.0	3.16	13.5	3.31
S-125PN1E5A U-125PEY1E5 (U-125PEY1E8)	220V 230V 240V 50Hz 1 phase (3 phase)	16	14.5	5.03	15.2	4.55	16.2	4.35	15.1	3.30	17.0	3.45
		20	13.5	5.32	14.0	4.81	15.0	4.60	14.0	3.49	15.7	3.65
		24	12.6	5.41	13.1	4.89	14.0	4.67	13.1	3.55	14.7	3.71
S-140PN1E5A U-140PEY1E8	220V 230V 240V 50Hz 3phase	16	16.7	5.52	17.2	5.43	17.3	4.91	17.3	4.33	17.3	3.66
		20	15.5	5.84	15.9	5.74	16.0	5.20	16.0	4.58	16.0	3.87
		24	14.5	5.93	14.9	5.84	15.0	5.28	15.0	4.65	15.0	3.94

1-13. Capacity Table

2. Heating Capacity Performance Data

□Combination of Multiple Unit

Ducted Type

TC :Cooling Capacity

IPT :Cooling Power Consumption

unit : kW

Model	Power Source	Ambient Return Air	Outdoor air intake temp(□C W.B.)									
			-5□C		0□C		6□C		10□C		15□C	
		DB	TC	IPT	TC	IPT	TC	IPT	TC	IPT	TC	IPT
S-36PN1E5A×2 U-71PEY1E5	220V 230V 240V 50Hz 1 phase	16	5.6	2.20	6.1	2.30	8.3	2.70	9.4	2.93	10.6	3.17
		20	5.5	2.32	6.0	2.43	8.1	2.84	9.1	3.09	10.2	3.33
		24	5.2	2.39	5.7	2.50	7.8	2.93	8.7	3.18	9.8	3.43
S-50PN1E5A×2 U-100PEY1E5 (U-100PEY1E8)	220V 230V 240V 50Hz 1 phase (3 phase)	16	13.4	4.48	13.9	4.05	14.9	3.87	13.9	2.94	15.6	3.08
		20	12.4	4.74	12.9	4.29	13.8	4.10	12.9	3.11	14.5	3.26
		24	11.6	4.82	12.1	4.36	12.9	4.17	12.0	3.16	13.5	3.31
S-60PN1E5A×2 U-125PEY1E5 (U-125PEY1E8)	220V 230V 240V 50Hz 1 phase (3 phase)	16	14.5	5.03	15.2	4.55	16.2	4.35	15.1	3.30	17.0	3.45
		20	13.5	5.32	14.0	4.81	15.0	4.60	14.0	3.49	15.7	3.65
		24	12.6	5.41	13.1	4.89	14.0	4.67	13.1	3.55	14.7	3.71
S-71PN1E5A×2 U-140PEY1E8	220V 230V 240V 50Hz 3phase	16	16.7	5.52	17.2	5.43	17.3	4.91	17.3	4.33	17.3	3.66
		20	15.5	5.84	15.9	5.74	16.0	5.20	16.0	4.58	16.0	3.87
		24	14.5	5.93	14.9	5.84	15.0	5.28	15.0	4.65	15.0	3.94

1-14. Product Fiche
U-50PE1E5

A

B

Indoor Unit	Outdoor Unit	C A～GA	GHI kW XY,Z	SEER X,Y	kWh/annum XY	M	N	E ～G	kW XY,Z	K SCOP X,Y	L kWh/annum XY	D A～G	kW XY,Z	K SCOP X,Y	L kWh/annum XY	OP		Q elbu (-10□() kW X,YZ	F A～G	□K kW XY,Z	SCOP X,Y	L kWh/annum XY
		SEER						Warmer Heating Season (Optional)				Average Heating Season (Mandatory)							Colder Heating Season (Optional)			
S-50PU1E5AU	U-50PE1E5A+	+5.06.565-×			26949×	A4.0				×3.8147	449690.00-	××								×		
S-50PF1E5AU	U-50PE1E5A+	5.0		5.73075665				-×××				A4.0		3.81474		5669		0.00-		××		×
S-50PN1E5AU	U-50PE1E5B5.	04.737558					65-××				×A3.83	.8			1400586	90.00-×					××	
S-50PT2E5AU	U-50PE1E5A+	+5.0-×××		6.42735565								A+4.04	.01400×××			55690.00-						
S-50PK1E5AU	U-50PE1E5A+	5.06.029257					65-××				×A4.03	.9143657					690.00		-×××			

ENERGIA · ЕНЕРГИЯ · ΕΝΕΡΓΕΙΑ · ENERGIJA · ENERGY · ENERGIE · ENERGI
626/2011

① : Panasonic Corporation

② : Model Name

③ : SEER Grading

④ : SCOP Grading (Standard, mandatory)

⑤ : SCOP Grading (Warmer, optional)

⑥ : SCOP Grading (Colder, optional)

⑦ : Design Load kW (round up to one decimal) □Cooling□

⑧ : SEER (round up to one decimal)

⑨ : Annual Energy Consumption (rounded □Cooling□ up to the nearest integer)

⑩ : Design Load kW (round up to one decimal) □Heating□

⑪ : SCOP (round up to one decimal) □Heating□

⑫ : Annual Energy Consumption (rounded up to the nearest integer) □Heating□

⑬ Sound Power level for all indoor units dB (cooling)

⑭ Sound Power level for all outdoor units dB (cooling)

⑮ Sound Power level for all indoor units dB (heating)

⑯ Sound Power level for all outdoor units dB (heating)

⑰ backup heating capacity X,YZ kW

⑱ name of refrigerant and GWP R410A (GWP 1975)

⑲ Refrigerant leakage contributes to climate change. Refrigerant with lower global warming potential (GWP) would contribute less to global warming than a refrigerant with higher GWP, if leaked to the atmosphere. This appliance contains a refrigerant □ uid with a GWP equal to 1975. This means that if 1 kg of this refrigerant □ uid would be leaked to the atmosphere, the impact on global warming would be 1975 times higher than 1 kg of CO_2, over a period of 100 years.
Never try to interfere with the refrigerant circuit yourself or disassemble the product yourself and always ask a professional.

⑳ Explanation on annual energy consumption Energy consumption □XYZ□ kWh per year, based on standard test results. Actual energy consumption will depend on how the appliance isused and where it is located.

ENERG Y UA IE IA
енергия · ενεργεια

A

B

Indoor Unit	Outdoor Unit	C A ~ GA	GHI kW XY,Z	SEER X,Y	kWh/annum XY	M	N	E ~ G	kW XY,Z	K SCOP X,Y	L kWh/annum XY	D A ~ G	kW XY,Z	K SCOP X,Y	L kWh/annum XY	O	P	Q elbu (-10□C) kW X,YZ	F A ~ G	kW XY,Z	K SCOP X,Y	L kWh/annum XY
		SEER						Warmer Heating Season (Optional)				Average Heating Season (Mandatory)							Colder Heating Season (Optional)			
S-60PU1E5A	U-60PE1E5AA	-+6.07.465-	×		28453×	A+6.0				×4.12	04753670.00-	-××								×		
S-60PF1E5A	U-60PE1E5AA	-+6.0		6.43285765				-×××				A6.0		3.92154		5767		0.00-		××		×
S-60PN1E5A	U-60PE1E5AA	6.05.538160					65-××				×A5.63	.8			206160	670.00-×					××	
S-60PT2E5A	U-60PE1E5AA	-+6.0-×××		6.83095665								A+6.04	.12049×××			56670.00-						
S-60PK1E5A	U-60PE1E5AA	-+6.06.631864					65-××				×A6.03	.9215464					670.00		-×××			

ENERGIA · ЕНЕРГИЯ · ΕΝΕΡΓΕΙΑ · ENERGIJA · ENERGY · ENERGIE · ENERGI
626/2011

① : Panasonic Corporation

② : Model Name

③ : SEER Grading

④ : SCOP Grading (Standard, mandatory)

⑤ : SCOP Grading (Warmer, optional)

⑥ : SCOP Grading (Colder, optional)

⑦ : Design Load kW (round up to one decimal) □Cooling□

⑧ : SEER (round up to one decimal)

⑨ : Annual Energy Consumption (rounded □Cooling□ up to the nearest integer)

⑩ : Design Load kW (round up to one decimal) □Heating□

⑪ : SCOP (round up to one decimal) □Heating□

⑫ : Annual Energy Consumption (rounded up to the nearest integer) □Heating□

⑬ Sound Power level for all indoor units dB (cooling)

⑭ Sound Power level for all outdoor units dB (cooling)

⑮ Sound Power level for all indoor units dB (heating)

⑯ Sound Power level for all outdoor units dB (heating)

⑰ backup heating capacity X,YZ kW

⑱ name of refrigerant and GWP R410A (GWP 1975)

⑲ Refrigerant leakage contributes to climate change. Refrigerant with lower global warming potential (GWP) would contribute less to global warming than a refrigerant with higher GWP, if leaked to the atmosphere. This appliance contains a refrigerant □ uid with a GWP equal to 1975. This means that if 1 kg of this refrigerant □ uid would be leaked to the atmosphere, the impact on global warming would be 1975 times higher than 1 kg of CO_2, over a period of 100 years.
Never try to interfere with the refrigerant circuit yourself or disassemble the product yourself and always ask a professional.

⑳ Explanation on annual energy consumption Energy consumption □XYZ□ kWh per year, based on standard test results. Actual energy consumption will depend on how the appliance isused and where it is located.

1-14. Product Fiche
U-60PEY1E5

A

B		SEER						SCOP															
								Warmer Heating Season (Optional)				Average Heating Season (Mandatory)							Colder Heating Season (Optional)				
Indoor Unit	Outdoor Unit	C A～GA	GHI kW XY,Z	SEER X,Y	kWh/annum XY	M	N	E ～G	□ kW XY,Z	K SCOP X,Y	L kWh/annum XY	D A～G	□ kW XY,Z	K SCOP X,Y	L kWh/annum XY	OP		Q elbu (-10□() kW X,YZ	F A～G	□K kW XY,Z	SCOP X,Y	L kWh/annum XY
S-60PU1E5A	U-60PEY1E5A	++6.06.865-×			30953×	A+6.0				×4.021	0053691.39	-××								×		
S-60PF1E5A	U-60PEY1E5A	6.0		5.43895	765			-×××				A5.0		3.81842		5769		0.33-		××		×
S-60PN1E5A	U-60PEY1E5B	6.04.843860					65-××				×A4.83	.8			175760	690.00-×					××	
S-60PT2E5A	U-60PEY1E5A	++6.0-×××		6.73145	665							A+6.04	.02100×××			56691.54-						
S-60PK1E5A	U-60PEY1E5A	6.05.438964					65-××				×A6.03	.9215464					691.51		-×××			

ENERGIA · ЕНЕРГИЯ · ΕΝΕΡΓΕΙΑ · ENERGIJA · ENERGY · ENERGIE · ENERGI
626/2011

① : Panasonic Corporation

② : Model Name

③ : SEER Grading

④ : SCOP Grading (Standard, mandatory)

⑤ : SCOP Grading (Warmer, optional)

⑥ : SCOP Grading (Colder, optional)

⑦ : Design Load kW (round up to one decimal) □Cooling□

⑧ : SEER (round up to one decimal)

⑨ : Annual Energy Consumption (rounded □Cooling□ up to the nearest integer)

⑩ : Design Load kW (round up to one decimal) □Heating□

⑪ : SCOP (round up to one decimal) □Heating□

⑫ : Annual Energy Consumption (rounded up to the nearest integer) □Heating□

⑬ Sound Power level for all indoor units dB (cooling)

⑭ Sound Power level for all outdoor units dB (cooling)

⑮ Sound Power level for all indoor units dB (heating)

⑯ Sound Power level for all outdoor units dB (heating)

⑰ backup heating capacity X,YZ kW

⑱ name of refrigerant and GWP R410A (GWP 1975)

⑲ Refrigerant leakage contributes to climate change. Refrigerant with lower global warming potential (GWP) would contribute less to global warming than a refrigerant with higher GWP, if leaked to the atmosphere. This appliance contains a refrigerant □ uid with a GWP equal to 1975. This means that if 1 kg of this refrigerant □ uid would be leaked to the atmosphere, the impact on global warming would be 1975 times higher than 1 kg of CO_2, over a period of 100 years.
Never try to interfere with the refrigerant circuit yourself or disassemble the product yourself and always ask a professional.

⑳ Explanation on annual energy consumption Energy consumption □XYZ□ kWh per year, based on standard test results. Actual energy consumption will depend on how the appliance isused and where it is located.

ENERG Y UA IE IA
енергия · ενεργεια

A

B

Indoor Unit	Outdoor Unit	C A ~ GA	GHI kW XY,Z	SEER X,Y	kWh/annum XY	M	N	E ~ G	kW XY,Z	K SCOP X,Y	L kWh/annum XY	D A ~ G	kW XY,Z	K SCOP X,Y	L kWh/annum XY	O	P	Q elbu (-10□C) kW X,YZ	F A ~ G	kW XY,Z	K SCOP X,Y	L kWh/annum XY
		SEER						Warmer Heating Season (Optional)				Average Heating Season (Mandatory)							Colder Heating Season (Optional)			
S-71PU1E5A	U-71PE1E5A	A++	7.1	7.4	336	54	65	-	×	×	×	A+	7.1	4.1	2424	54	67	0.43	-	×	×	×
S-36PU1E5A ×2	U-71PE1E5A	A++	7.1	7.4	336	47	65	-	×	×	×	A+	7.1	4.1	2424	47	67	0.83	-	×	×	×
S-71PF1E5A	U-71PE1E5A	A++	7.1	6.4	388	57	65	-	×	×	×	A+	7.1	4.0	2485	57	67	0.42	-	×	×	×
S-36PF1E5A ×2	U-71PE1E5A	A++	7.1	6.2	401	55	65	-	×	×	×	A+	7.1	4.0	2485	55	67	0.42	-	×	×	×
S-71PN1E5A	U-71PE1E5A	A	7.1	5.5	448	60	65	-	×	×	×	A	6.2	3.8	2284	60	67	0.25	-	×	×	×
S-36PN1E5A ×2	U-71PE1E5A	B7.14.8516				57	65	-	×	×	×	A6.13.82245				57	67	0.24	-	×	×	×
S-71PT2E5A	U-71PE1E5A	A++7.140157		6.265-×						×4.0248557	×A+		7.1				670.00	-×××				
S-36PT2E5A ×2	U-71PE1E5A	A++7.16.265			40154			-××4.0248554			×A+		7.1				670.45	-×××				
S-71PK1E5A	U-71PE1E5A	A++7.137664		6.665-×						×3.9254864	×A		7.1				670.44	-×××				
S-36PK1E5A ×2	U-71PE1E5A	A++7.16.665			37652			-××3.9254852			×A		7.1				670.83	-×××				

ENERGIA · ЕНЕРГИЯ · ΕΝΕΡΓΕΙΑ · ENERGIJA · ENERGY · ENERGIE · ENERGI
626/2011

① : Panasonic Corporation

② : Model Name

③ : SEER Grading

④ : SCOP Grading (Standard, mandatory)

⑤ : SCOP Grading (Warmer, optional)

⑥ : SCOP Grading (Colder, optional)

⑦ : Design Load kW (round up to one decimal) □Cooling□

⑧ : SEER (round up to one decimal)

⑨ : Annual Energy Consumption (rounded □Cooling□ up to the nearest integer)

⑩ : Design Load kW (round up to one decimal) □Heating□

⑪ : SCOP (round up to one decimal) □Heating□

⑫ : Annual Energy Consumption (rounded up to the nearest integer) □Heating□

⑬ Sound Power level for all indoor units dB (cooling)

⑭ Sound Power level for all outdoor units dB (cooling)

⑮ Sound Power level for all indoor units dB (heating)

⑯ Sound Power level for all outdoor units dB (heating)

⑰ backup heating capacity X,YZ kW

⑱ name of refrigerant and GWP R410A (GWP 1975)

⑲ Refrigerant leakage contributes to climate change. Refrigerant with lower global warming potential (GWP) would contribute less to global warming than a refrigerant with higher GWP, if leaked to the atmosphere. This appliance contains a refrigerant □ uid with a GWP equal to 1975. This means that if 1 kg of this refrigerant □ uid would be leaked to the atmosphere, the impact on global warming would be 1975 times higher than 1 kg of CO_2, over a period of 100 years.
Never try to interfere with the refrigerant circuit yourself or disassemble the product yourself and always ask a professional.

⑳ Explanation on annual energy consumption Energy consumption □XYZ□ kWh per year, based on standard test results. Actual energy consumption will depend on how the appliance isused and where it is located.

1-14. Product Fiche
U-71PE1E8A

ENERG Y UA IE IA
енергия · ενεργεια

A

B

Indoor Unit	Outdoor Unit	C A ~ GA	GHI kW XY,Z	SEER X,Y	kWh/annum XY	M	N	E ~ G	kW XY,Z	K SCOP X,Y	L kWh/annum XY	D A ~ G	kW XY,Z	K SCOP X,Y	L kWh/annum XY	O	P	Q elbu (-10□C) kW X,YZ	F A ~ G	kW XY,Z	K SCOP X,Y	L kWh/annum XY
		SEER						SCOP														
								Warmer Heating Season (Optional)				Average Heating Season (Mandatory)							Colder Heating Season (Optional)			
S-71PU1E5A	U-71PE1E8AA	++7.16.865-×			36554×					×4.0		A+7.1			248554		670.43-×				××	
S-36PU1E5A ×2	U-71PE1E8AA	++7.1		6.83654765				-×××				A+7.14.02485×××				47670.83-						
S-71PF1E5A	U-71PE1E8AA	+7.1		6.04145765				-×××				A7.1		3.92548		5767		0.42-		××		×
S-36PF1E5A ×2	U-71PE1E8AA	+7.15.842855					65-××				×A7.13.9				254855670.42				-×		××	
S-71PN1E5A	U-71PE1E8A	A7.1		5.14875065				-×××				A6.23.82284				6067		0.25-		×	×	×
S-36PN1E5A ×2	U-71PE1E8A57	B7.14.7531					65-××				×57	A6.13.82245					67	0.24	-×××			
S-71PT2E5A	U-71PE1E8AA	+7.15.965-×			42157×A+					×4.0248557			7.1				670.45-×				××	
S-36PT2E5A ×2	U-71PE1E8AA	+7.15.965-			42154				×	×4.0248554×		A+	7.1				670.45-×				××	
S-71PK1E5A	U-71PE1E8AA	++7.16.165-×			40764×A					×3.8261664			7.1				670.44-×				××	
S-36PK1E5A ×2	U-71PE1E8AA	++7.16.165-			40752				×	×3.8261652×		A	7.1				670.83-×				××	

ENERGIA · ЕНЕРГИЯ · ΕΝΕΡΓΕΙΑ · ENERGIJA · ENERGY · ENERGIE · ENERGI
626/2011

① : Panasonic Corporation

② : Model Name

③ : SEER Grading

④ : SCOP Grading (Standard, mandatory)

⑤ : SCOP Grading (Warmer, optional)

⑥ : SCOP Grading (Colder, optional)

⑦ : Design Load kW (round up to one decimal) □Cooling□

⑧ : SEER (round up to one decimal)

⑨ : Annual Energy Consumption (rounded □Cooling□ up to the nearest integer)

⑩ : Design Load kW (round up to one decimal) □Heating□

⑪ : SCOP (round up to one decimal) □Heating□

⑫ : Annual Energy Consumption (rounded up to the nearest integer) □Heating□

⑬ Sound Power level for all indoor units dB (cooling)

⑭ Sound Power level for all outdoor units dB (cooling)

⑮ Sound Power level for all indoor units dB (heating)

⑯ Sound Power level for all outdoor units dB (heating)

⑰ backup heating capacity X,YZ kW

⑱ name of refrigerant and GWP R410A (GWP 1975)

⑲ Refrigerant leakage contributes to climate change. Refrigerant with lower global warming potential (GWP) would contribute less to global warming than a refrigerant with higher GWP, if leaked to the atmosphere. This appliance contains a refrigerant □ uid with a GWP equal to 1975. This means that if 1 kg of this refrigerant □ uid would be leaked to the atmosphere, the impact on global warming would be 1975 times higher than 1 kg of CO_2, over a period of 100 years.
Never try to interfere with the refrigerant circuit yourself or disassemble the product yourself and always ask a professional.

⑳ Explanation on annual energy consumption Energy consumption □XYZ□ kWh per year, based on standard test results. Actual energy consumption will depend on how the appliance isused and where it is located.

ENERG Y UA IE IA
енергия · ενεργεια

A

B

Indoor Unit	Outdoor Unit	C A～GA	GHI kW XY,Z	SEER X,Y	kWh/annum XY	M	N	E ～G	kW XY,Z	K SCOP X,Y	L kWh/annum XY	D A～G	kW XY,Z	K SCOP X,Y	L kWh/annum XY	OP		Q elbu (-10□() kW X,YZ	F A～G	□K kW XY,Z	SCOP X,Y	L kWh/annum XY
		SEER						Warmer Heating Season (Optional)				Average Heating Season (Mandatory)							Colder Heating Season (Optional)			
										SCOP												
S-71PU1E5A	U-71PEY1E5A	++7.16.370-	×		39454×	A+6.0				×4.0210	054701.39-	××								×		
S-36PU1E5A × 2	U-71PEY1E5A	++7.1		6.33944	770			-×××				A+6.0		4.02100		4770××		1.39-				×
S-71PF1E5A	U-71PEY1E5A	7.1		5.34695	770			-×××				A5.5		3.82026		5770××		0.96-				×
S-36PF1E5A × 2	U-71PEY1E5A	7.1		5.14875	570			-×××				A5.5		3.82026		5570××		0.96-				×
S-71PN1E5A	U-71PEY1E5B	7.1		5.14916	070			-×××				A5.3		3.81952		6070××		0.60-				×
S-36PN1E5A × 2	U-71PEY1E5C	7.1		4.45635	770			-×××				A5.1		3.81887		5770××		0.40-				×
S-71PT2E5A	U-71PEY1E5A	++7.1		6.14085	770			-×××				A+6.0		4.02100		5770××		1.30-				×
S-36PT2E5A × 2	U-71PEY1E5A	++7.1		6.14085	470			-×××				A+6.0		4.02100		5470××		1.30-				×
S-71PK1E5A	U-71PEY1E5A	7.1		5.14875	470			-×××				A6.0		3.92154		6470××		1.51-				×
S-36PK1E5A × 2	U-71PEY1E5A	7.1		5.14875	270			-×××				A6.0		3.92154		5270××		1.51-				×

ENERGIA · ЕНЕРГИЯ · ΕΝΕΡΓΕΙΑ · ENERGIJA · ENERGY · ENERGIE · ENERGI
626/2011

① : Panasonic Corporation

② : Model Name

③ : SEER Grading

④ : SCOP Grading (Standard, mandatory)

⑤ : SCOP Grading (Warmer, optional)

⑥ : SCOP Grading (Colder, optional)

⑦ : Design Load kW (round up to one decimal) □Cooling□

⑧ : SEER (round up to one decimal)

⑨ : Annual Energy Consumption (rounded □Cooling□ up to the nearest integer)

⑩ : Design Load kW (round up to one decimal) □Heating□

⑪ : SCOP (round up to one decimal) □Heating□

⑫ : Annual Energy Consumption (rounded up to the nearest integer) □Heating□

⑬ Sound Power level for all indoor units dB (cooling)

⑭ Sound Power level for all outdoor units dB (cooling)

⑮ Sound Power level for all indoor units dB (heating)

⑯ Sound Power level for all outdoor units dB (heating)

⑰ backup heating capacity X,YZ kW

⑱ name of refrigerant and GWP R410A (GWP 1975)

⑲ Refrigerant leakage contributes to climate change. Refrigerant with lower global warming potential (GWP) would contribute less to global warming than a refrigerant with higher GWP, if leaked to the atmosphere. This appliance contains a refrigerant □ uid with a GWP equal to 1975. This means that if 1 kg of this refrigerant □ uid would be leaked to the atmosphere, the impact on global warming would be 1975 times higher than 1 kg of CO_2, over a period of 100 years.
Never try to interfere with the refrigerant circuit yourself or disassemble the product yourself and always ask a professional.

⑳ Explanation on annual energy consumption Energy consumption □XYZ□ kWh per year, based on standard test results. Actual energy consumption will depend on how the appliance isused and where it is located.

1-14. Product Fiche
U-100PE1E5A

A

B

Indoor Unit	Outdoor Unit	C A ~ GA	GHI kW XY,Z	SEER X,Y	kWh/annum XY	M	N	E ~ G	kW XY,Z	K SCOP X,Y	L kWh/annum XY	D A ~ G	kW XY,Z	K SCOP X,Y	L kWh/annum XY	O	P	Q elbu (-10□C) kW X,YZ	F A ~ G	kW XY,Z	K SCOP X,Y	L kWh/annum XY
		SEER						SCOP														
								Warmer Heating Season (Optional)				Average Heating Season (Mandatory)							Colder Heating Season (Optional)			
S-100PU1E5A	U-100PE1E5A	A++	10.0	6.6	530	62	69	-	×	×	×	A+	10.0	4.2	3333	62	69	0.00	-	×	×	×
S-50PU1E5A ×2	U-100PE1E5A	A++	10.0	6.6	530	49	69	-	×	×	×	A+	10.0	4.2	3333	49	69	0.00	-	×	×	×
S-36PU1E5A ×3	U-100PE1E5A	A++	10.0	6.6	530	47	69	-	×	×	×	A+	10.0	4.2	3333	47	69	0.00	-	×	×	×
S-100PF1E5A	U-100PE1E5A	A+	10.0	5.8	603	60	69	-	×	×	×	A	10.0	3.8	3684	60	69	0.00	-	×	×	×
S-50PF1E5A ×2	U-100PE1E5A	A+	10.0	5.8	603	56	69	-	×	×	×	A	10.0	3.8	3684	56	69	0.00	-	×	×	×
S-36PF1E5A ×3	U-100PE1E5A	A+	10.0	5.8	603	55	69	-	×	×	×	A	10.0	3.8	3684	55	69	0.00	-	×	×	×
S-100PN1E5A	U-100PE1E5A	A+	10.0	5.9	589	65	69	-	×	×	×	A	10.0	3.9	3590	65	69	0.00	-	×	×	×
S-50PN1E5A ×2	U-100PE1E5A	A10.05.5636				58	69	-	×	×	×	A10.03.83670				58	69	0.00	-	×	×	×
S-36PN1E5A ×3	U-100PE1E5A	A10.05.2673				57	69	-	×	×	×	A10.03.83670				57	69	0.00	-	×	×	×

ENERGIA · ЕНЕРГИЯ · ΕΝΕΡΓΕΙΑ · ENERGIJA · ENERGY · ENERGIE · ENERGI
626/2011

① : Panasonic Corporation

② : Model Name

③ : SEER Grading

④ : SCOP Grading (Standard, mandatory)

⑤ : SCOP Grading (Warmer, optional)

⑥ : SCOP Grading (Colder, optional)

⑦ : Design Load kW (round up to one decimal) □Cooling□

⑧ : SEER (round up to one decimal)

⑨ : Annual Energy Consumption (rounded □Cooling□ up to the nearest integer)

⑩ : Design Load kW (round up to one decimal) □Heating□

⑪ : SCOP (round up to one decimal) □Heating□

⑫ : Annual Energy Consumption (rounded up to the nearest integer) □Heating□

⑬ Sound Power level for all indoor units dB (cooling)

⑭ Sound Power level for all outdoor units dB (cooling)

⑮ Sound Power level for all indoor units dB (heating)

⑯ Sound Power level for all outdoor units dB (heating)

⑰ backup heating capacity X,YZ kW

⑱ name of refrigerant and GWP R410A (GWP 1975)

⑲ Refrigerant leakage contributes to climate change. Refrigerant with lower global warming potential (GWP) would contribute less to global warming than a refrigerant with higher GWP, if leaked to the atmosphere. This appliance contains a refrigerant □ uid with a GWP equal to 1975. This means that if 1 kg of this refrigerant □ uid would be leaked to the atmosphere, the impact on global warming would be 1975 times higher than 1 kg of CO_2, over a period of 100 years.
Never try to interfere with the refrigerant circuit yourself or disassemble the product yourself and always ask a professional.

⑳ Explanation on annual energy consumption Energy consumption □XYZ□ kWh per year, based on standard test results. Actual energy consumption will depend on how the appliance isused and where it is located.

A

B		SEER						SCOP															
								Warmer Heating Season (Optional)				Average Heating Season (Mandatory)							Colder Heating Season (Optional)				
Indoor Unit	Outdoor Unit	C A ~ GA	GHI kW XY,Z	SEER X,Y	kWh/annum XY	M	N	E ~ G	kW XY,Z	K SCOP X,Y	L kWh/annum XY	D A ~ G	kW XY,Z	K SCOP X,Y	L kWh/annum XY	O	P	Q elbu (-10□C) kW X,YZ	F A ~ G	kW XY,Z	K SCOP X,Y	L kWh/annum XY
S-100PT2E5A	U-100PE1E5A	A++10.0	6.769-×		52360×	A+10.0				×4.3325	660						690.00-	×			××	
S-50PT2E5A ×2	U-100PE1E5A	A++10.0	-×××	6.5539	5569							A+10.0	4.33256×××			55690.00-						
S-36PT2E5A ×3	U-100PE1E5A	A++10.0	6.5539			5469-×××						A+10.0	4.332565469					0.00-×××				
S-100PK1E5A	U-100PE1E5A	A++9.5	6.25366569					-××A	9.53.835006	5690.00-×××	×											
S-50PK1E5A ×2	U-100PE1E5A	A++10.0	6.25645769	-×××A+10.0	4.0350057	690.00													-×××			
S-36PK1E5A ×2	U-100PE1E5A	A++10.0	6.2		5645269	-×××A+10.0	4.0350052	690.00											-×××			

ENERGIA · ЕНЕРГИЯ · ΕΝΕΡΓΕΙΑ · ENERGIJA · ENERGY · ENERGIE · ENERGI
626/2011

① : Panasonic Corporation

② : Model Name

③ : SEER Grading

④ : SCOP Grading (Standard, mandatory)

⑤ : SCOP Grading (Warmer, optional)

⑥ : SCOP Grading (Colder, optional)

⑦ : Design Load kW (round up to one decimal) □Cooling□

⑧ : SEER (round up to one decimal)

⑨ : Annual Energy Consumption (rounded □Cooling□ up to the nearest integer)

⑩ : Design Load kW (round up to one decimal) □Heating□

⑪ : SCOP (round up to one decimal) □Heating□

⑫ : Annual Energy Consumption (rounded up to the nearest integer) □Heating□

⑬ Sound Power level for all indoor units dB (cooling)

⑭ Sound Power level for all outdoor units dB (cooling)

⑮ Sound Power level for all indoor units dB (heating)

⑯ Sound Power level for all outdoor units dB (heating)

⑰ backup heating capacity X,YZ kW

⑱ name of refrigerant and GWP R410A (GWP 1975)

⑲ Refrigerant leakage contributes to climate change. Refrigerant with lower global warming potential (GWP) would contribute less to global warming than a refrigerant with higher GWP, if leaked to the atmosphere. This appliance contains a refrigerant □ uid with a GWP equal to 1975. This means that if 1 kg of this refrigerant □ uid would be leaked to the atmosphere, the impact on global warming would be 1975 times higher than 1 kg of CO_2, over a period of 100 years.
Never try to interfere with the refrigerant circuit yourself or disassemble the product yourself and always ask a professional.

⑳ Explanation on annual energy consumption Energy consumption □XYZ□ kWh per year, based on standard test results. Actual energy consumption will depend on how the appliance isused and where it is located.

1-14. Product Fiche
U-100PE1E8A

A

B		SEER						SCOP														
								Warmer Heating Season (Optional)				Average Heating Season (Mandatory)							Colder Heating Season (Optional)			
Indoor Unit	Outdoor Unit	C A ~ GA	GHI kW XY,Z	SEER X,Y	kWh/annum XY	M	N	E ~ G	□ kW XY,Z	K SCOP X,Y	L kWh/annum XY	D A ~ G	□ kW XY,Z	K SCOP X,Y	L kWh/annum XY	O	P	Q elbu (-10□C) kW X,YZ	F A ~ G	□K kW XY,Z	SCOP X,Y	L kWh/annum XY
S-100PU1E5A	U-100PE1E8A	A++	10.0	6.5	538	62	69	-	×	×	×	A+	10.0	4.2	3333	62	69	0.00	-	×	×	×
S-50PU1E5A ×2	U-100PE1E8A	A++	10.0	6.5	538	49	69	-	×	×	×	A+	10.0	4.2	3333	49	69	0.00	-	×	×	×
S-36PU1E5A ×3	U-100PE1E8A	A++	10.0	6.5	538	47	69	-	×	×	×	A+	10.0	4.2	3333	47	69	0.00	-	×	×	×
S-100PF1E5A	U-100PE1E8A	A+	10.0	5.7	614	60	69	-	×	×	×	A	10.0	3.8	3684	60	69	0.00	-	×	×	×
S-50PF1E5A ×2	U-100PE1E8A	A+	10.0	5.7	614	56	69	-	×	×	×	A	10.0	3.8	3684	56	69	0.00	-	×	×	×
S-36PF1E5A ×3	U-100PE1E8A	A+	10.0	5.7	614	55	69	-	×	×	×	A	10.0	3.8	3684	55	69	0.00	-	×	×	×
S-100PN1E5A	U-100PE1E8A	A+	10.0	5.6	621	65	69	-	×	×	×	A	10.0	3.8	3684	65	69	0.00	-	×	×	×
S-50PN1E5A ×2	U-100PE1E8A	A10.05.3659				58	69	-	×	×	×	A9.93.83646				58	69	0.34	-	×	×	×
S-36PN1E5A ×3	U-100PE1E8A	B10.05.0700				57	69	-	×	×	×	A9.93.83646				57	69	0.34	-	×	×	×

ENERGIA · ЕНЕРГИЯ · ΕΝΕΡΓΕΙΑ · ENERGIJA · ENERGY · ENERGIE · ENERGI
626/2011

① : Panasonic Corporation

② : Model Name

③ : SEER Grading

④ : SCOP Grading (Standard, mandatory)

⑤ : SCOP Grading (Warmer, optional)

⑥ : SCOP Grading (Colder, optional)

⑦ : Design Load kW (round up to one decimal) □Cooling□

⑧ : SEER (round up to one decimal)

⑨ : Annual Energy Consumption (rounded □Cooling□ up to the nearest integer)

⑩ : Design Load kW (round up to one decimal) □Heating□

⑪ : SCOP (round up to one decimal) □Heating□

⑫ : Annual Energy Consumption (rounded up to the nearest integer) □Heating□

⑬ Sound Power level for all indoor units dB (cooling)

⑭ Sound Power level for all outdoor units dB (cooling)

⑮ Sound Power level for all indoor units dB (heating)

⑯ Sound Power level for all outdoor units dB (heating)

⑰ backup heating capacity X,YZ kW

⑱ name of refrigerant and GWP R410A (GWP 1975)

⑲ Refrigerant leakage contributes to climate change. Refrigerant with lower global warming potential (GWP) would contribute less to global warming than a refrigerant with higher GWP, if leaked to the atmosphere. This appliance contains a refrigerant □ uid with a GWP equal to 1975. This means that if 1 kg of this refrigerant □ uid would be leaked to the atmosphere, the impact on global warming would be 1975 times higher than 1 kg of CO_2, over a period of 100 years.
Never try to interfere with the refrigerant circuit yourself or disassemble the product yourself and always ask a professional.

⑳ Explanation on annual energy consumption Energy consumption □XYZ□ kWh per year, based on standard test results. Actual energy consumption will depend on how the appliance isused and where it is located.

ENERGY ενεργεια · ENERGIA · ENERGIA · ENERGIA · ENERGIE · ENERGI

A

B

Indoor Unit	Outdoor Unit	C A ~ GA	GHI kW XY,Z	SEER X,Y	kWh/annum XY	M	N	E ~ G	kW XY,Z	K SCOP X,Y	L kWh/annum XY	D A ~ G	kW XY,Z	K SCOP X,Y	L kWh/annum XY	O	P	Q elbu (-10□C) kW X,YZ	F A ~ G	kW XY,Z	K SCOP X,Y	L kWh/annum XY
		SEER						Warmer Heating Season (Optional)		SCOP		Average Heating Season (Mandatory)							Colder Heating Season (Optional)			
S-100PT2E5A	U-100PE1E8A	A++	10.06.669-×		53160×	A+10.0				×4.3325660							690.00-×				××	
S-50PT2E5A ×2	U-100PE1E8A	A++	10.0	6.45475569				-×××				A+	10.04.33256×××			55690.00-						
S-36PT2E5A ×3	U-100PE1E8A	A++	10.06.4547			5469-×××						A+	10.04.332565469					0.00-×××				
S-100PK1E5A	U-100PE1E8A	A+	9.56.0554			6569-×××						A	9.53.835006569					0.00-×××				
S-50PK1E5A ×2	U-100PE1E8A	A++	10.06.169-×		57457×	A+10.0				×4.0350057							690.00-×				××	
S-36PK1E5A ×3	U-100PE1E8A	A++	10.0	6.15745269				-×××				A+	10.04.03500×××			52690.00-						

ENERGIA · ЕНЕРГИЯ · ΕΝΕΡΓΕΙΑ · ENERGIA · ENERGY · ENERGIE · ENERGI
626/2011

① : Panasonic Corporation

② : Model Name

③ : SEER Grading

④ : SCOP Grading (Standard, mandatory)

⑤ : SCOP Grading (Warmer, optional)

⑥ : SCOP Grading (Colder, optional)

⑦ : Design Load kW (round up to one decimal) □Cooling□

⑧ : SEER (round up to one decimal)

⑨ : Annual Energy Consumption (rounded □Cooling□ up to the nearest integer)

⑩ : Design Load kW (round up to one decimal) □Heating□

⑪ : SCOP (round up to one decimal) □Heating□

⑫ : Annual Energy Consumption (rounded up to the nearest integer) □Heating□

⑬ Sound Power level for all indoor units dB (cooling)

⑭ Sound Power level for all outdoor units dB (cooling)

⑮ Sound Power level for all indoor units dB (heating)

⑯ Sound Power level for all outdoor units dB (heating)

⑰ backup heating capacity X,YZ kW

⑱ name of refrigerant and GWP R410A (GWP 1975)

⑲ Refrigerant leakage contributes to climate change. Refrigerant with lower global warming potential (GWP) would contribute less to global warming than a refrigerant with higher GWP, if leaked to the atmosphere. This appliance contains a refrigerant □ uid with a GWP equal to 1975. This means that if 1 kg of this refrigerant □ uid would be leaked to the atmosphere, the impact on global warming would be 1975 times higher than 1 kg of CO_2, over a period of 100 years.
Never try to interfere with the refrigerant circuit yourself or disassemble the product yourself and always ask a professional.

⑳ Explanation on annual energy consumption Energy consumption □XYZ□ kWh per year, based on standard test results. Actual energy consumption will depend on how the appliance isused and where it is located.

ENERGY · ενεργεια · ENERGIA · ENERGIE · ENERGI

A

B

Indoor Unit	Outdoor Unit	C A ~ GA	GHI kW XY,Z	SEER X,Y	kWh/annum XY	M	N	E ~ G	kW XY,Z	K SCOP X,Y	L kWh/annum XY	D A ~ G	kW XY,Z	K SCOP X,Y	L kWh/annum XY	O	P	Q elbu (-10□C) kW X,YZ	F A ~ G	kW XY,Z	K SCOP X,Y	L kWh/annum XY
		SEER						Warmer Heating Season (Optional)				Average Heating Season (Mandatory)							Colder Heating Season (Optional)			
S-100PU1E5A	U-100PEY1E5	A++10.06.470-×			54762×	A+10.0				×4.0350062							701.04-×				××	
S-50PU1E5A ×2	U-100PEY1E5	A++10.0		6.45474970				-×××				A+10.04.03500×××				49701.14-						
S-100PF1E5A	U-100PEY1E5	A10.05.4648				6070-×××						A9.53.835006070						1.06-×××				
S-50PF1E5A ×2	U-100PEY1E5	A10.0		5.46485670				-×××				A9.5		3.83500		5670		1.06-		××		×
S-100PN1E5A	U-100PEY1E5	A10.05.366165					70-××				×A7.63.8				280065700.00-×						××	
S-50PN1E5A ×2	U-100PEY1E5	B10.04.9715				5870-××					×58	A7.53.8			2761		700.22-×××					
S-100PT2E5A	U-100PEY1E5	A++10.0-×××		6.15746070								A10.03.93590				6070		1.52-		××		×
S-50PT2E5A ×2	U-100PEY1E5	A+10.05.959455					70-××				×A10.03.9359055						701.52		-×××			
S-100PK1E5A	U-100PEY1E5	A+9.05.8543				65	70-××				×A9.03.8-×××				331665701.14							
S-50PK1E5A ×2	U-100PEY1E5	A++10.06.1574				57	70	-×××				A10.03.83684				57	701.60-			×××		

ENERGIA · ΕΝΕΡΓΙΑ · ΕΝΕΡΓΕΙΑ · ENERGIJA · ENERGY · ENERGIE · ENERGI
626/2011

① : Panasonic Corporation

② : Model Name

③ : SEER Grading

④ : SCOP Grading (Standard, mandatory)

⑤ : SCOP Grading (Warmer, optional)

⑥ : SCOP Grading (Colder, optional)

⑦ : Design Load kW (round up to one decimal) □Cooling□

⑧ : SEER (round up to one decimal)

⑨ : Annual Energy Consumption (rounded □Cooling□ up to the nearest integer)

⑩ : Design Load kW (round up to one decimal) □Heating□

⑪ : SCOP (round up to one decimal) □Heating□

⑫ : Annual Energy Consumption (rounded up to the nearest integer) □Heating□

⑬ Sound Power level for all indoor units dB (cooling)

⑭ Sound Power level for all outdoor units dB (cooling)

⑮ Sound Power level for all indoor units dB (heating)

⑯ Sound Power level for all outdoor units dB (heating)

⑰ backup heating capacity X,YZ kW

⑱ name of refrigerant and GWP R410A (GWP 1975)

⑲ Refrigerant leakage contributes to climate change. Refrigerant with lower global warming potential (GWP) would contribute less to global warming than a refrigerant with higher GWP, if leaked to the atmosphere. This appliance contains a refrigerant □ uid with a GWP equal to 1975. This means that if 1 kg of this refrigerant □ uid would be leaked to the atmosphere, the impact on global warming would be 1975 times higher than 1 kg of CO_2, over a period of 100 years.
Never try to interfere with the refrigerant circuit yourself or disassemble the product yourself and always ask a professional.

⑳ Explanation on annual energy consumption Energy consumption □XYZ□ kWh per year, based on standard test results. Actual energy consumption will depend on how the appliance isused and where it is located.

ENERG Y UA IE IA
енергия · ενεργεια

A

B

Indoor Unit	Outdoor Unit	C A ~ GA	GHI kW XY,Z	SEER X,Y	kWh/annum XY	M	N	E ~ G	kW XY,Z	K SCOP X,Y	L kWh/annum XY	D A ~ G	kW XY,Z	K SCOP X,Y	L kWh/annum XY	O	P	Q elbu (-10□C) kW X,YZ	F A ~ G	□K kW XY,Z	SCOP X,Y	L kWh/annum XY
		SEER						SCOP														
								Warmer Heating Season (Optional)				Average Heating Season (Mandatory)							Colder Heating Season (Optional)			
S-100PU1E5A	U-100PEY1E8	A++10.0		6.270-	××4.056462×	A+10.0350062××											701.04-×					
S-50PU1E5A ×2	U-100PEY1E8	A++10.06.2564				4970-×××						A+10.04.035004970						1.14-×××				
S-100PF1E5A	U-100PEY1E8	A10.0		5.2673	6070			-×××				A9.53.83500×××				60701.06-						
S-50PF1E5A ×2	U-100PEY1E8	A10.05.2673				5670-×××						A9.53.835005670						1.06-×××				
S-100PN1E5A	U-100PEY1E8	A10.05.2			6776570-××						×A7.63.8280065						700.00-×××					
S-50PN1E5A ×2	U-100PEY1E8	B10.04.8			728	58×	70-××					A7.53.82761				58700.22			-×××			
S-100PT2E5A	U-100PEY1E8	A+10.06.0584				6070-×××						A10.03.935906070						1.52-×××				
S-50PT2E5A ×2	U-100PEY1E8	A+10.05.8			6045570-××						×A10.03.9359055						701.52		-××	×		
S-100PK1E5A	U-100PEY1E8	A+9.070		5.755365				-×××A9.0						3.8331665701.14					-×××			
S-50PK1E5A ×2	U-100PEY1E8	A+10.0		5.9593		5770		-	×××			A10.03.83684				57	701.60		-	×××		

ENERGIA · ЕНЕРГИЯ · ΕΝΕΡΓΕΙΑ · ENERGIJA · ENERGY · ENERGIE · ENERGI
626/2011

① : Panasonic Corporation

② : Model Name

③ : SEER Grading

④ : SCOP Grading (Standard, mandatory)

⑤ : SCOP Grading (Warmer, optional)

⑥ : SCOP Grading (Colder, optional)

⑦ : Design Load kW (round up to one decimal) □Cooling□

⑧ : SEER (round up to one decimal)

⑨ : Annual Energy Consumption (rounded □Cooling□ up to the nearest integer)

⑩ : Design Load kW (round up to one decimal) □Heating□

⑪ : SCOP (round up to one decimal) □Heating□

⑫ : Annual Energy Consumption (rounded up to the nearest integer) □Heating□

⑬ Sound Power level for all indoor units dB (cooling)

⑭ Sound Power level for all outdoor units dB (cooling)

⑮ Sound Power level for all indoor units dB (heating)

⑯ Sound Power level for all outdoor units dB (heating)

⑰ backup heating capacity X,YZ kW

⑱ name of refrigerant and GWP R410A (GWP 1975)

⑲ Refrigerant leakage contributes to climate change. Refrigerant with lower global warming potential (GWP) would contribute less to global warming than a refrigerant with higher GWP, if leaked to the atmosphere. This appliance contains a refrigerant □ uid with a GWP equal to 1975. This means that if 1 kg of this refrigerant □ uid would be leaked to the atmosphere, the impact on global warming would be 1975 times higher than 1 kg of CO_2, over a period of 100 years.
Never try to interfere with the refrigerant circuit yourself or disassemble the product yourself and always ask a professional.

⑳ Explanation on annual energy consumption Energy consumption □XYZ□ kWh per year, based on standard test results. Actual energy consumption will depend on how the appliance isused and where it is located.

– MEMO –

2. TEST RUN

■ PRECAUTIONS REGARDING TEST RUN 2-2
■ CHECKS AFTER INSTALLATION HAVE COMPLETED..... 2-3
■ REGARDING DELIVERY TO THE CUSTOMER 2-3

PRECAUTIONS REGARDING TEST RUN

Check Before Test Run

	Content check
Power supply cable Indoor/outdoor connection wire Earth wire	● Is the wire set up and connected as described in the instructions? Check for any phase sequence. ● Are the wire connection's screws loose? ● Is the open and close device / leakage breaker installed? ● Is the power supply cable's thickness and length appropriately measured as described in the instructions? ● Is it earthed (grounded)? ● Check that the insulation resistant value is more than 1 MΩ. Use the 500 V mega-testers to measure the insulation. Do not use the mega-tester for any other circuit except for voltage of 220V to 240V or 380-415V. ● Are the wire connections for the indoor/outdoor units connected as described in the instructions? Are there any looped wires? ● Was the •N-phase□surely connected when connecting the power supply wire on the three-phase model? If N-phase is not connected, only the fan may repeat turning ON/OFF without the compressor operating. In that case, check if there is any problem with N-phase connection.
Refrigerant pipe	● Is the piping installed as described in the instructions? ● Are the pipes sizes appropriate? ● Does the pipe's length adhere to the speci“ cations? ● Is the branch pipe slant being appropriately done as described in the instructions? ● Was vacuum removal suf“ ciently carried out? ● Was the leak tightness test carried out with nitrogen gas? Use the testing pressure of 4.15 MPa. ● Is the piping insulation material appropriately installed? (Insulation material is necessary for both gas and liquid piping.) ● Is the 3-way valve for the liquid side and gas side open?

- Always be sure to use a properly insulated tool to operate the short-circuit pin on the circuit board. (Do not use your “ nger.)
- Never switch the power supply ON until the installation has completed.
- Supply electrical current through all indoor units and check the voltage.
- Supply electrical current through all the outdoor units and check each inter-phase voltage.
- Before the test run, ensure to check that the 3-way valve is open. Operating while the valve is closed causes the compressor to fail.

Test Run Procedure

- If there are duplicated system addresses, or if the settings for the Nos. of the indoor units are not consistent, an alarm will occur and the system will not start.
- Switch the power supply ON both indoor and outdoor units.
- Short-circuit CHK pin on the outdoor main PCB.
  Do not remove CHK pin until test run is completed.
  Removing CHK pin stops test run.
- Short-circuit RUN pin on the outdoor main PCB for one second or longer.
  Factory setting is cooling operation mode and cooling operation test run starts.
  If heating operation starts, short-circuit both right side and centre of the MODE pin (centre and COOL) continuously.
- Ensure to conduct a test run. In addition, be sure to run the cooling operation test run for at least 20 minutes before starting the heating operation test run.
- To conduct heating operation test run, short-circuit left side and centre of the MODE pin (centre and HEAT) continuously.
- Removing CHK pin's and MODE pin□s short-circuit stops test run.
- For the test run using remote control unit, please see installation manual included with the remote control unit.

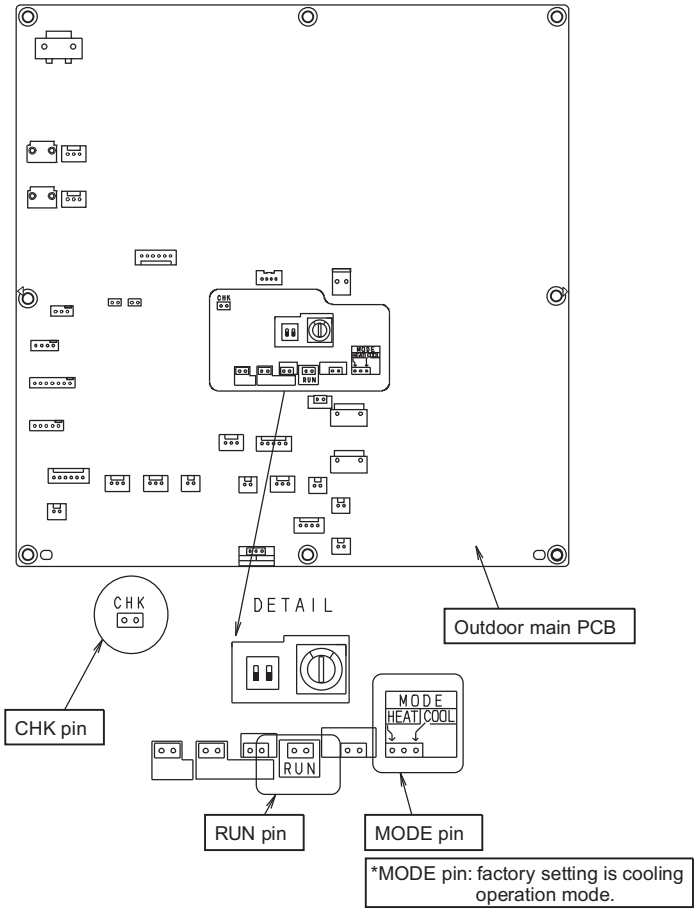

CHECKS AFTER INSTALLATION HAVE COMPLETED

- Check the following items after completing installation.
  - ☐ Is there a short circuit with the intake air flow?
  - ☐ Is the insulation secure? (Refrigerant piping)
  - ☐ Are there any errors with the wiring?
  - ☐ Are the terminal screws loose? Tightening torque (Unit: N•m □kgf•m□)
    M4□ 1.57 - 1.96 □0.16 - 0.2□, M5... 1.96 - 2.45 □0.2 - 0.25□
  - ☐ Is the drain water flowing smoothly?
  - ☐ Is the insulation material properly installed?
  - ☐ Is the earth wire securely connected?
  - ☐ Is the front panel and the indoor unit air conditioner firmly fixed and was the installation completed without any leakage from the refrigerant?
  - ☐ Are the indoor and outdoor units secured firmly installed with bolts at secured locations?

REGARDING DELIVERY TO THE CUSTOMER

- Request the customer to review the instruction manual and explain the operating method for the product.
- In addition, it is also recommended that regular inspection checks are agreed upon for maintenance.

User inspection places
- • Filter and grill cleaning
- • Exterior cleaning

Serviceman inspection places
- • Check the operating status
- • Clean the drain pan or things related to the water discharge
- • Heat exchanger cleaning

Refer to the installation instruction manual provided with the indoor unit for the specifications on the indoor unit installation.

– MEMO –

3. ELECTRICAL DATA

3-1. Indoor Units (Electric Wiring Diagram Schematic Diagram) 3-2
4-Way Cassette Type 3-2
4-Way Cassette 60 × 60 Type 3-3
Ceiling Type 3-4
Wall Mounted Type 3-7
Low Silhouette Ducted Type 3-8
Ducted Type 3-9
3-2. Outdoor Units (Electric Wiring Diagram) 3-11

3-1. Indoor Units

■ 4-Way Cassette Type S-36PU1E5A / S-45PU1E5A / S-50PU1E5A / S-60PU1E5A / S-71PU1E5A / S-100PU1E5A / S-125PU1E5A / S-140PU1E5A

Electric Wiring Diagram

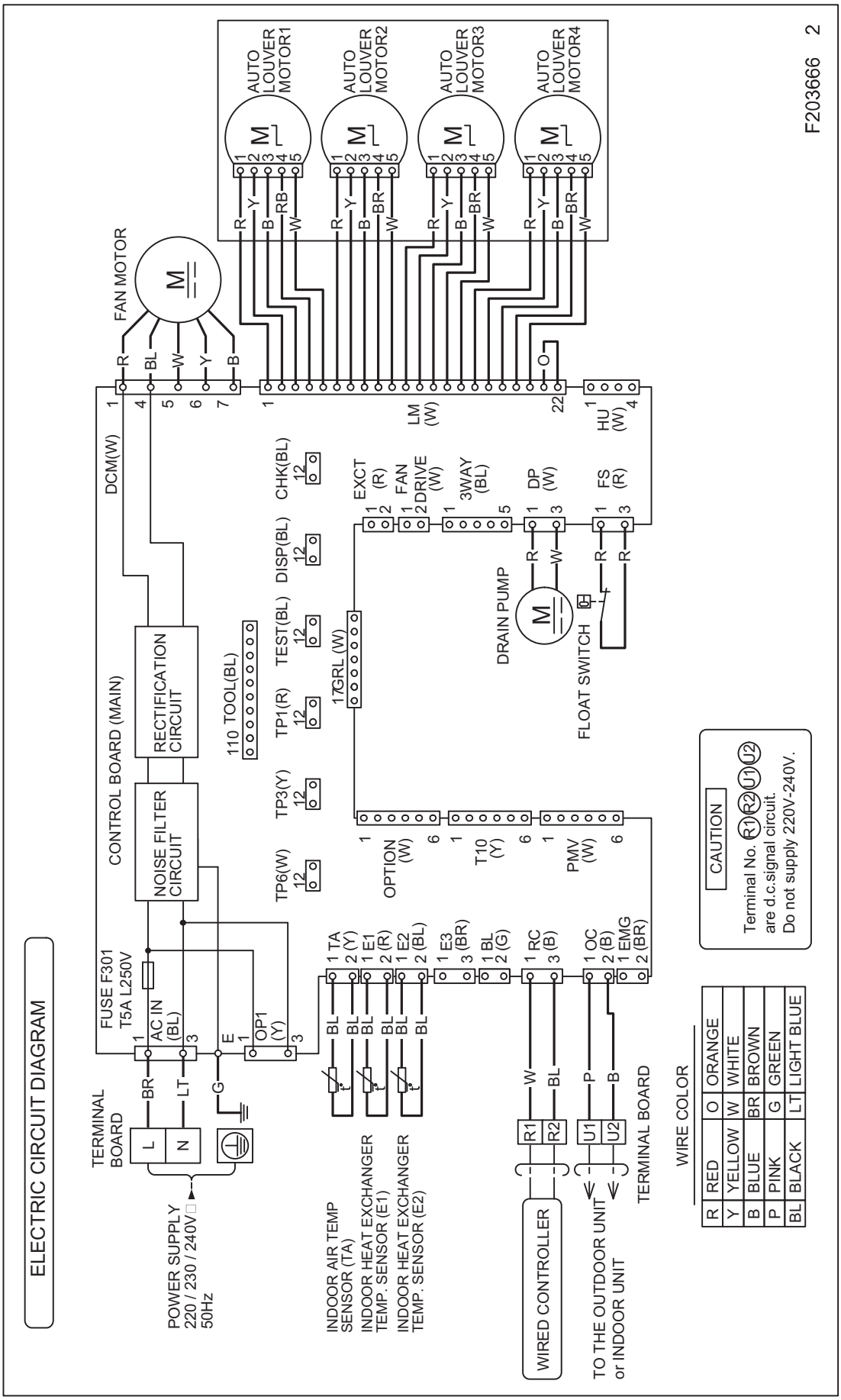

■ 4-Way Cassette 60 × 60 Type S-36PY1E5 / S-45PY1E5 / S-50PY1E5
Electric Wiring Diagram

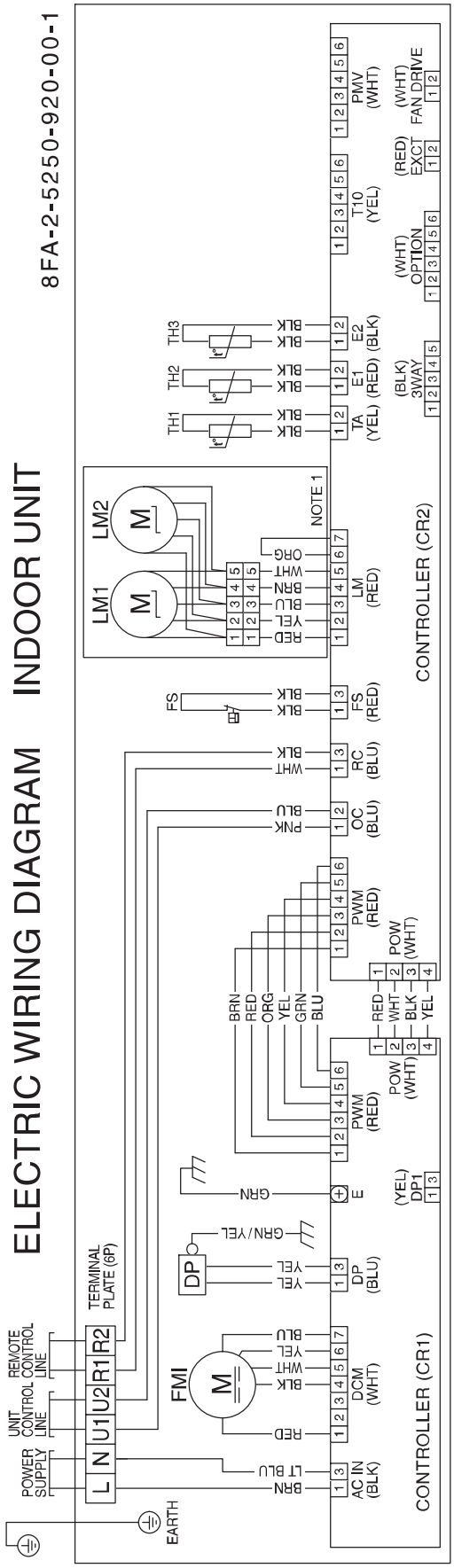

SYMBOLS	DESCRIPTION	SYMBOLS	DESCRIPTION
FMI	INDOOR FAN MOTOR	FS	FLOAT SWITCH
TH1	ROOM THERMISTOR	LM1,2	AUTO LOUVER MOTOR
TH2	THERMISTOR (INDOOR COIL E1)	CR1,2	INDOOR CONTROLLER
TH3	THERMISTOR (INDOOR COIL E2)	□	CONNECTOR, TERMINAL PLATE
DP	DRAIN PUMP	⊕	TERMINAL

NOTE 1 : PANEL (OPTION)

3-1. Indoor Units

■ Ceiling Type S-36PT1E5 / S-45PT1E5 / S-50PT1E5 / S-60PT1E5 / S-71PT1E5
S-100PT1E5 / S-125PT1E5 / S-140PT1E5

Electric Wiring Diagram

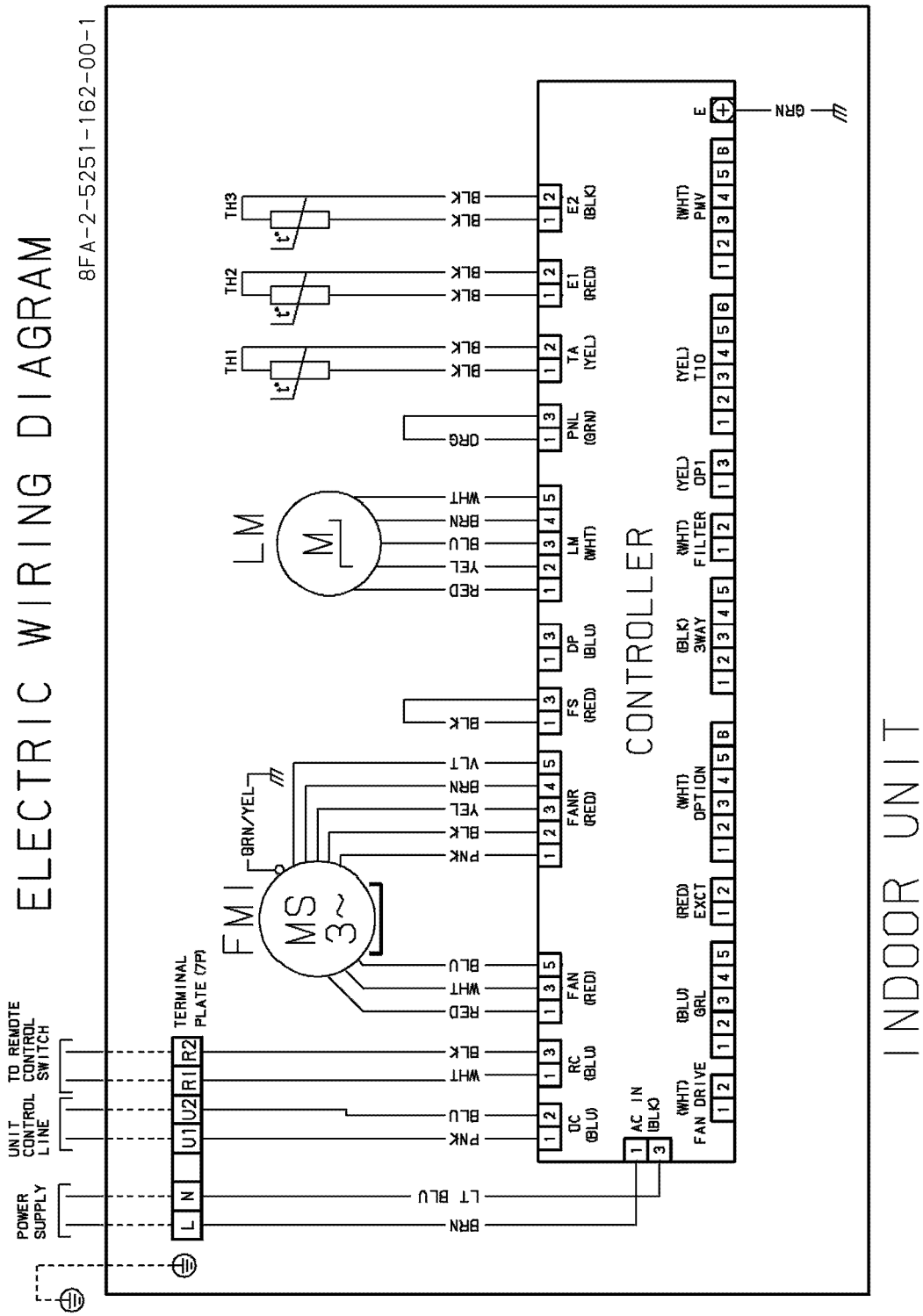

3-1. Indoor Units

■ Ceiling Type S-36PT1E5 / S-45PT1E5 / S-50PT1E5 / S-60PT1E5 / S-71PT1E5
S-100PT1E5 / S-125PT1E5 / S-140PT1E5

Schematic Diagram

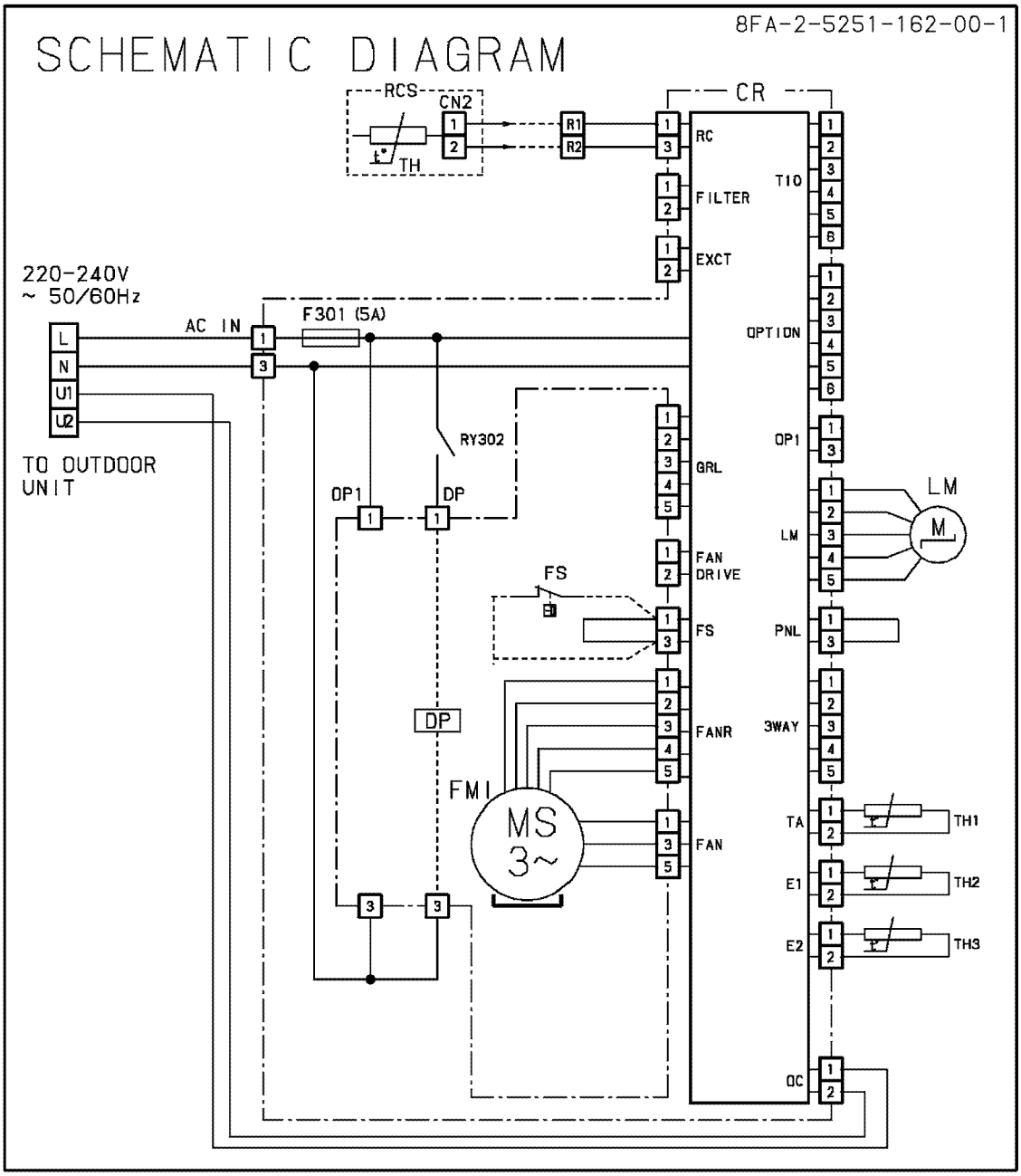

SYMBOLS	DESCRIPTION	SYMBOLS	DESCRIPTION
FMI	INDOOR FAN MOTOR	RY302	AUXILIARY RELAY
TH1	ROOM THERMISTOR	(DP)	DRAIN PUMP (OPTION)
TH2	THERMISTOR (INDOOR COIL E1)	(FS)	FLOAT SWITCH (OPTION)
TH3	THERMISTOR (INDOOR COIL E2)	(RCS)	REMOTE CONTROL SWITCH (OPTION) TH:ROOM THERMISTOR
F301	FUSE		
CR	INDOOR CONTROLLER	□	CONNECTOR、TERMINAL PLATE
LM	AUTO LOUVER MOTOR	⊕	TERMINAL

3-1. Indoor Units

■ Ceiling Type S-36PT2E5A / S-45PT2E5A / S-50PT2E5A / S-60PT2E5A / S-71PT2E5A
S-100PT2E5A / S-125PT2E5A / S-140PT2E5A

Electric Wiring Diagram

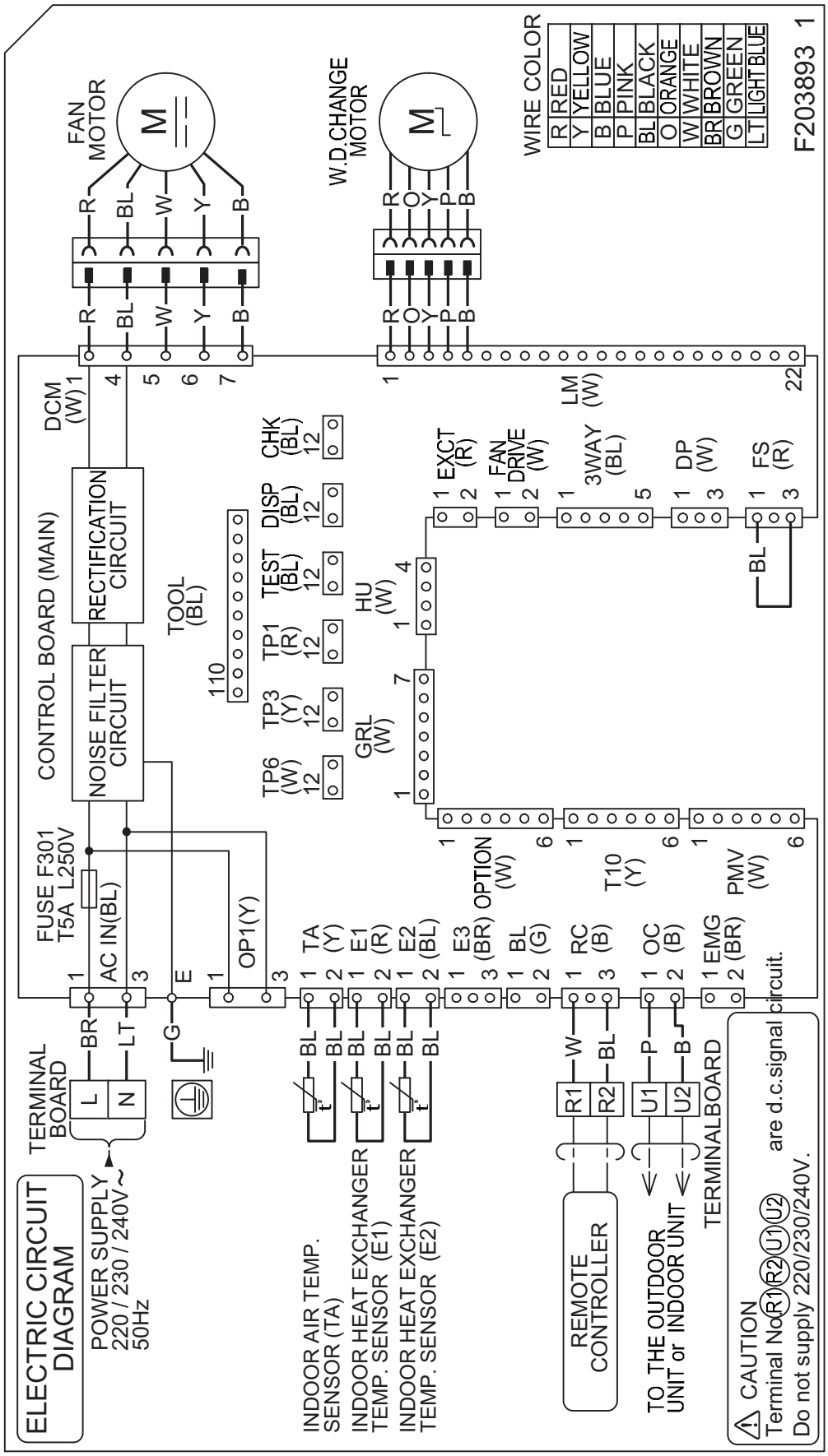

3-1. Indoor Units

■ Wall Mounted Type S-36PK1E5A / S-45PK1E5A / S-50PK1E5A / S-60PK1E5A / S-71PK1E5A / S-100PK1E5A
Electric Wiring Diagram

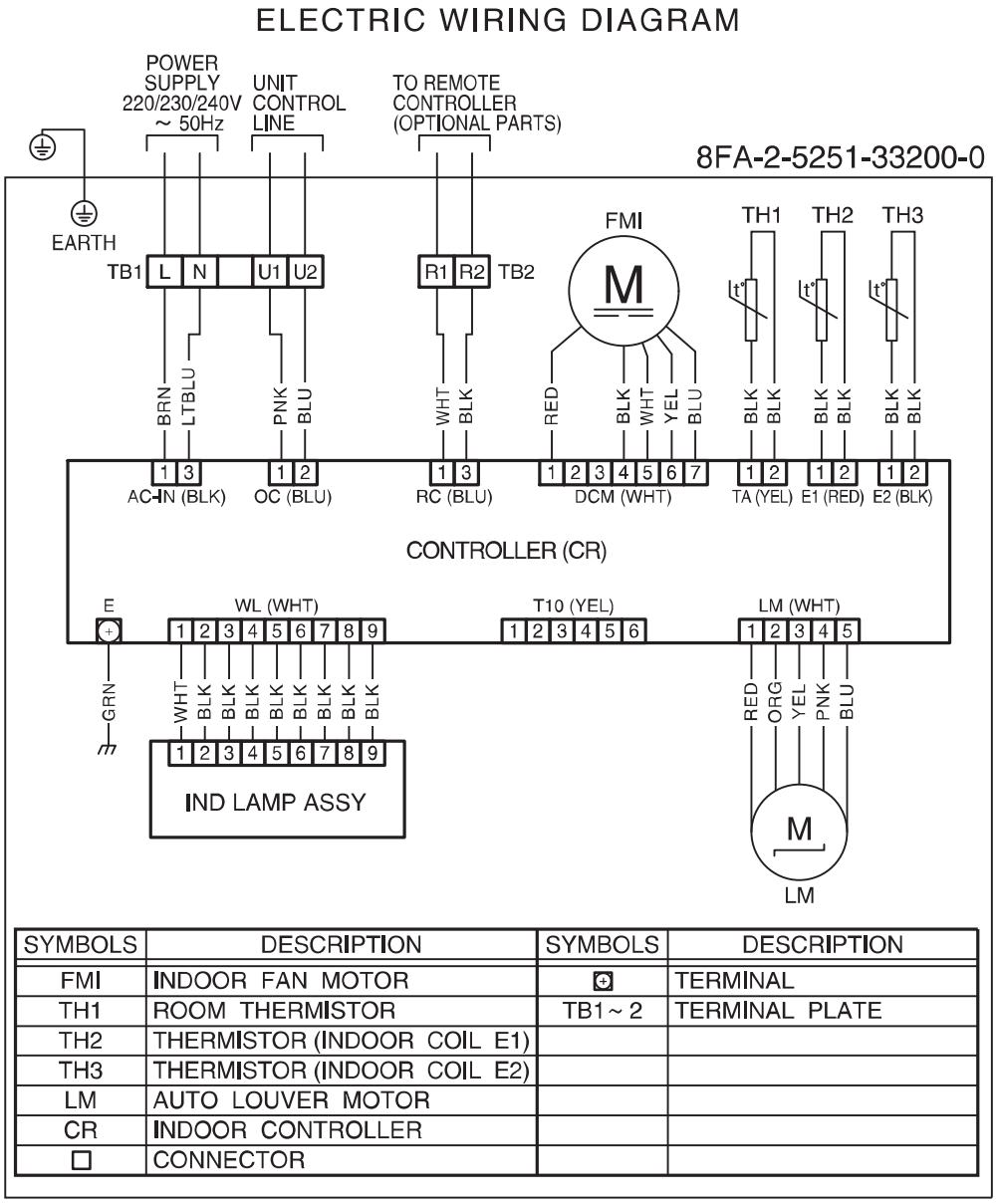

SYMBOLS	DESCRIPTION	SYMBOLS	DESCRIPTION
FMI	INDOOR FAN MOTOR	⊕	TERMINAL
TH1	ROOM THERMISTOR	TB1 ~ 2	TERMINAL PLATE
TH2	THERMISTOR (INDOOR COIL E1)		
TH3	THERMISTOR (INDOOR COIL E2)		
LM	AUTO LOUVER MOTOR		
CR	INDOOR CONTROLLER		
□	CONNECTOR		

3-1. Indoor Units

■ Low Silhouette Ducted Type S-36PF1E5A / S-45PF1E5A / S-50PF1E5A / S-60PF1E5A / S-71PF1E5A
S-100PF1E5A / S-125PF1E5A / S-140PF1E5A

Electric Wiring Diagram

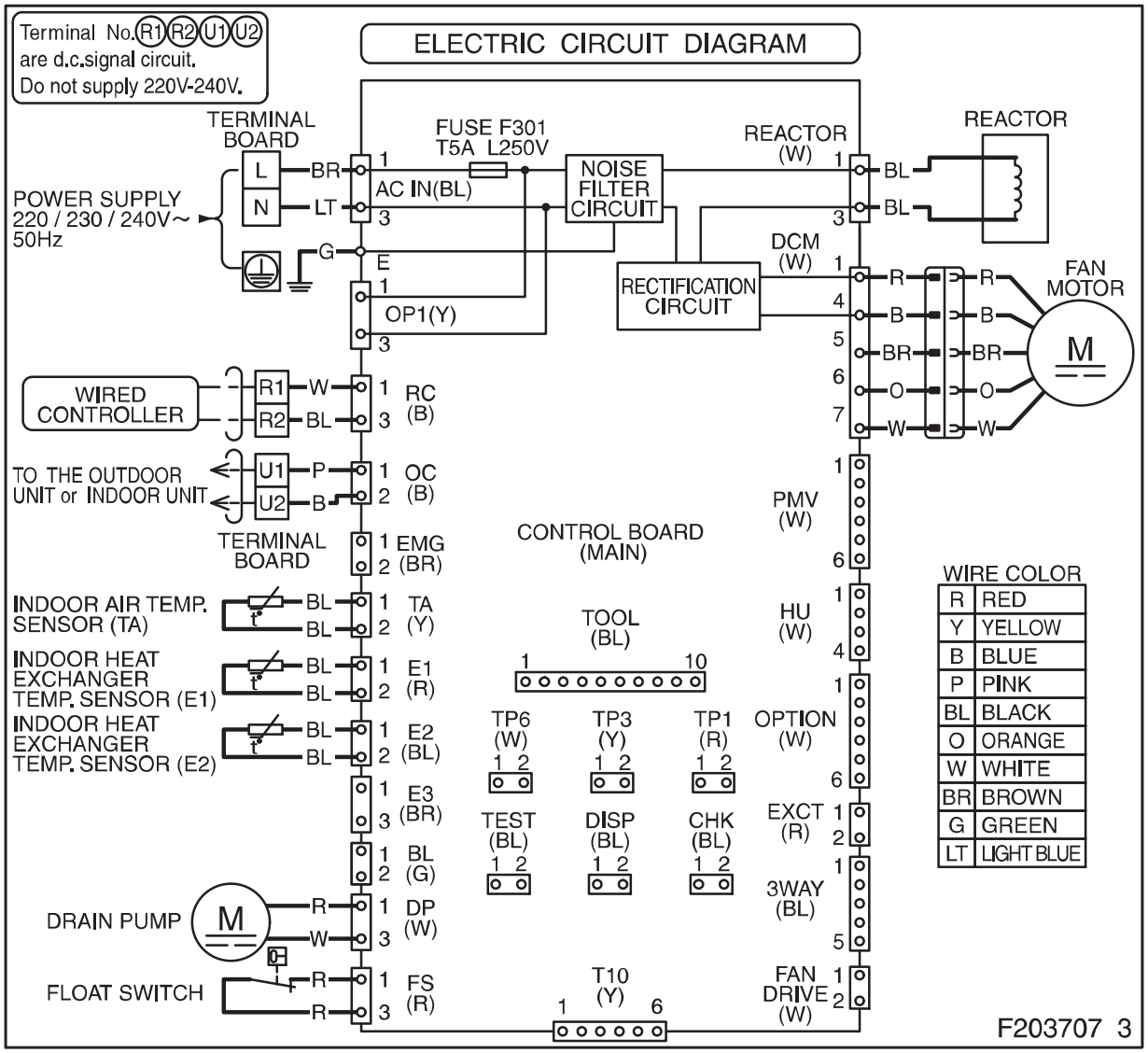

3-1. Indoor Units

■ Ducted Type S-36PN1E5A / S-45PN1E5A / S-50PN1E5A

Electric Wiring Diagram

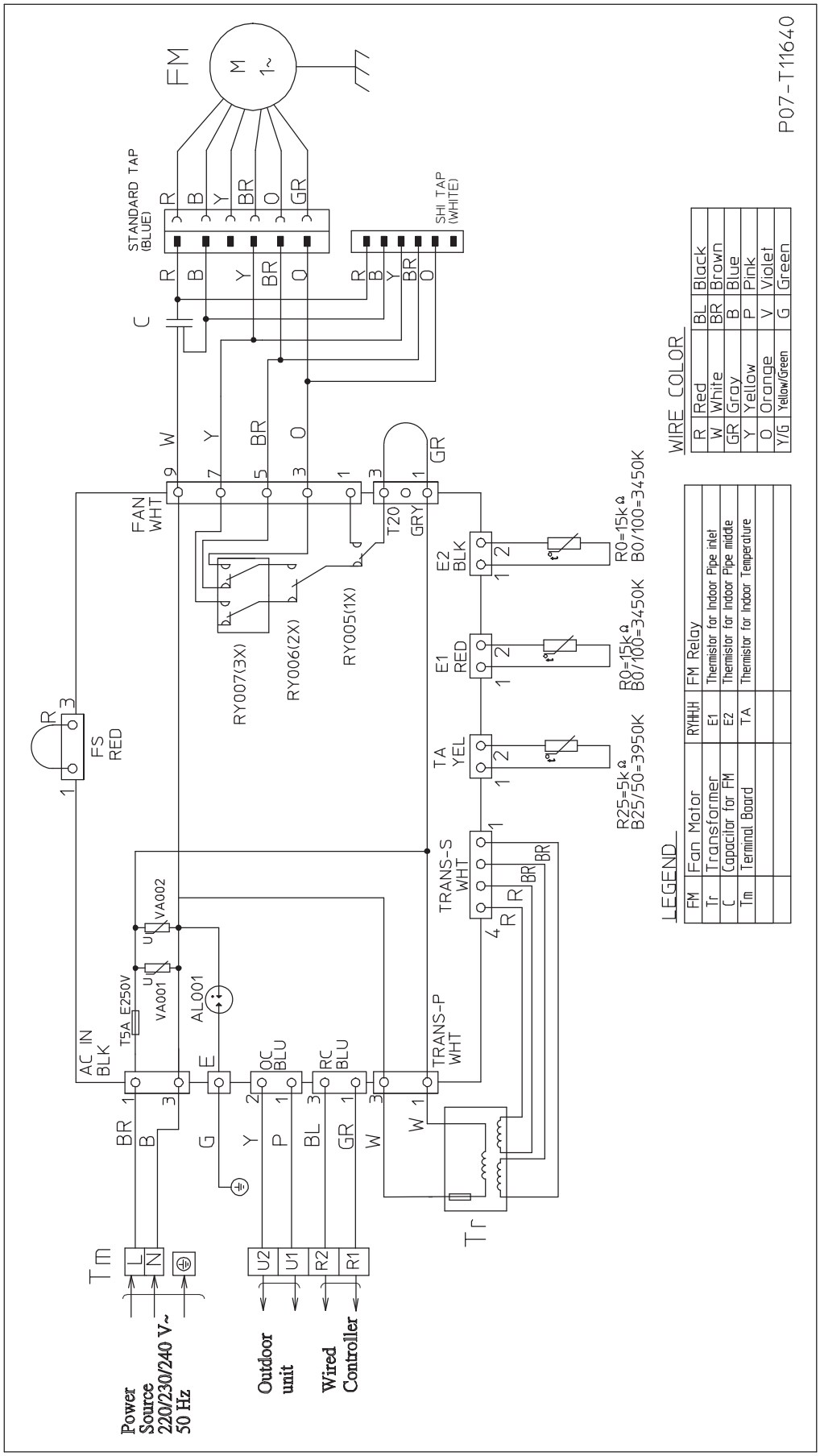

3-1. Indoor Units

■ Ducted Type S-60PN1E5A / S-71PN1E5A / S-100PN1E5A / S-125PN1E5A / S-140PN1E5A

Electric Wiring Diagram

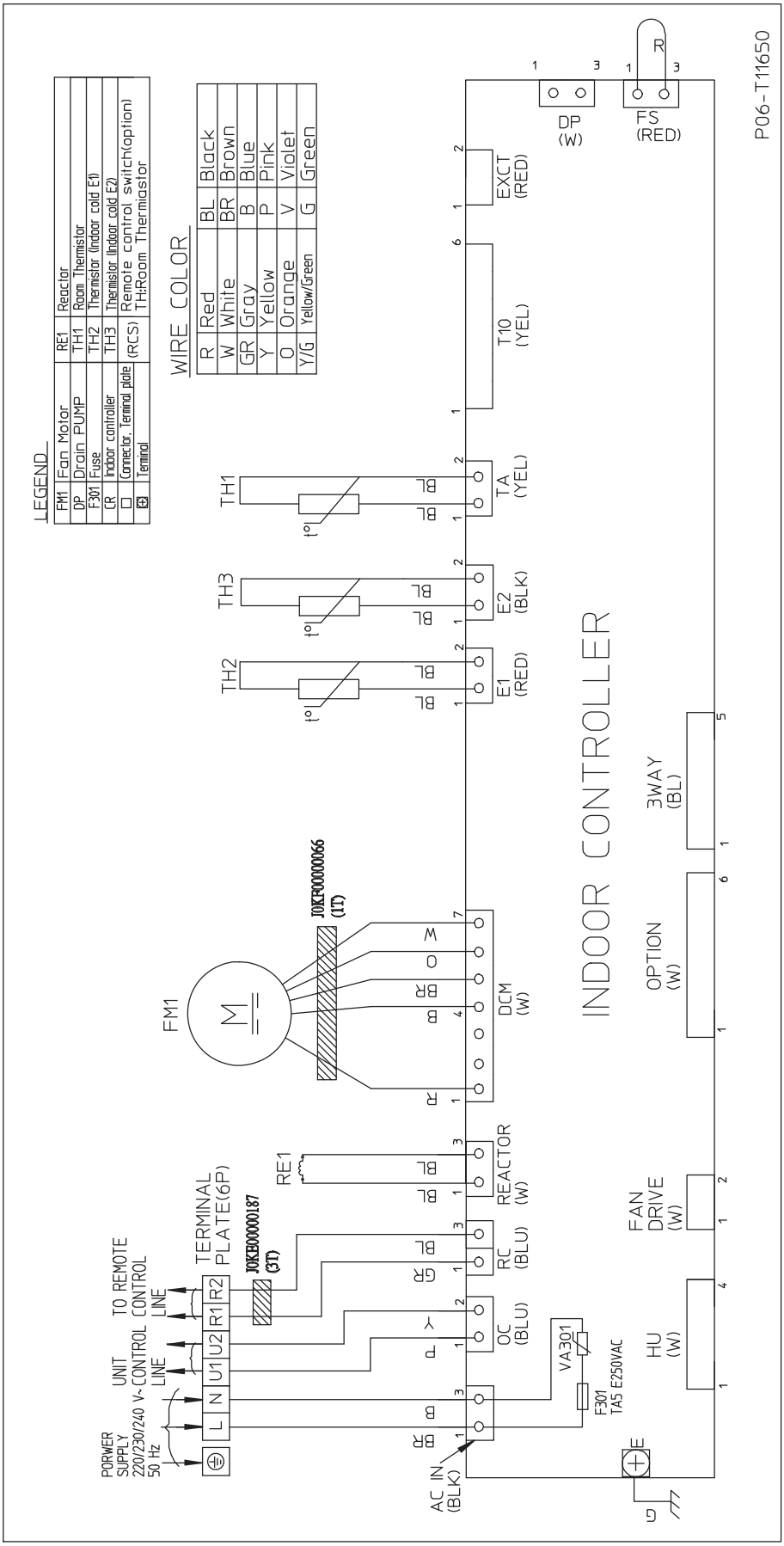

3-2. Outdoor Units

■ Single-phase U-50PE1E5

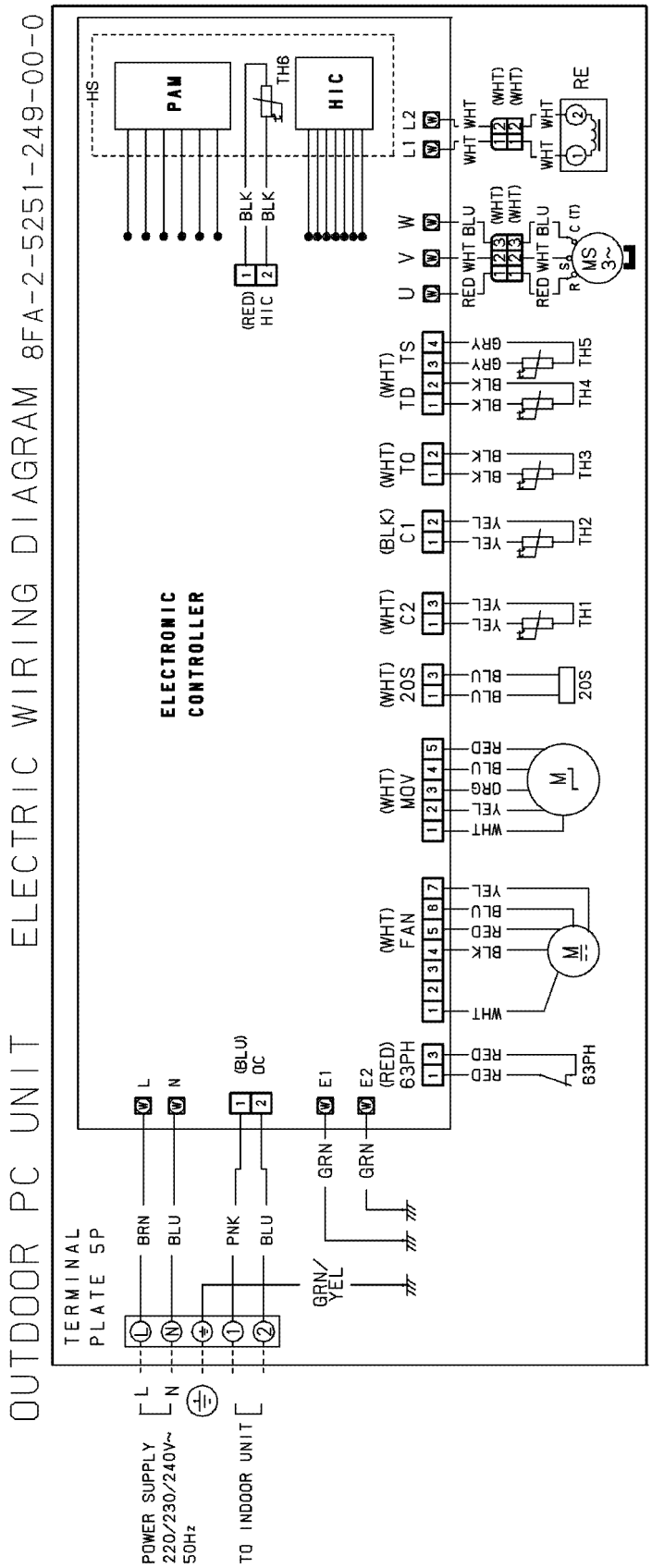

3-2. Outdoor Units

■ Single-phase U-50PE1E5

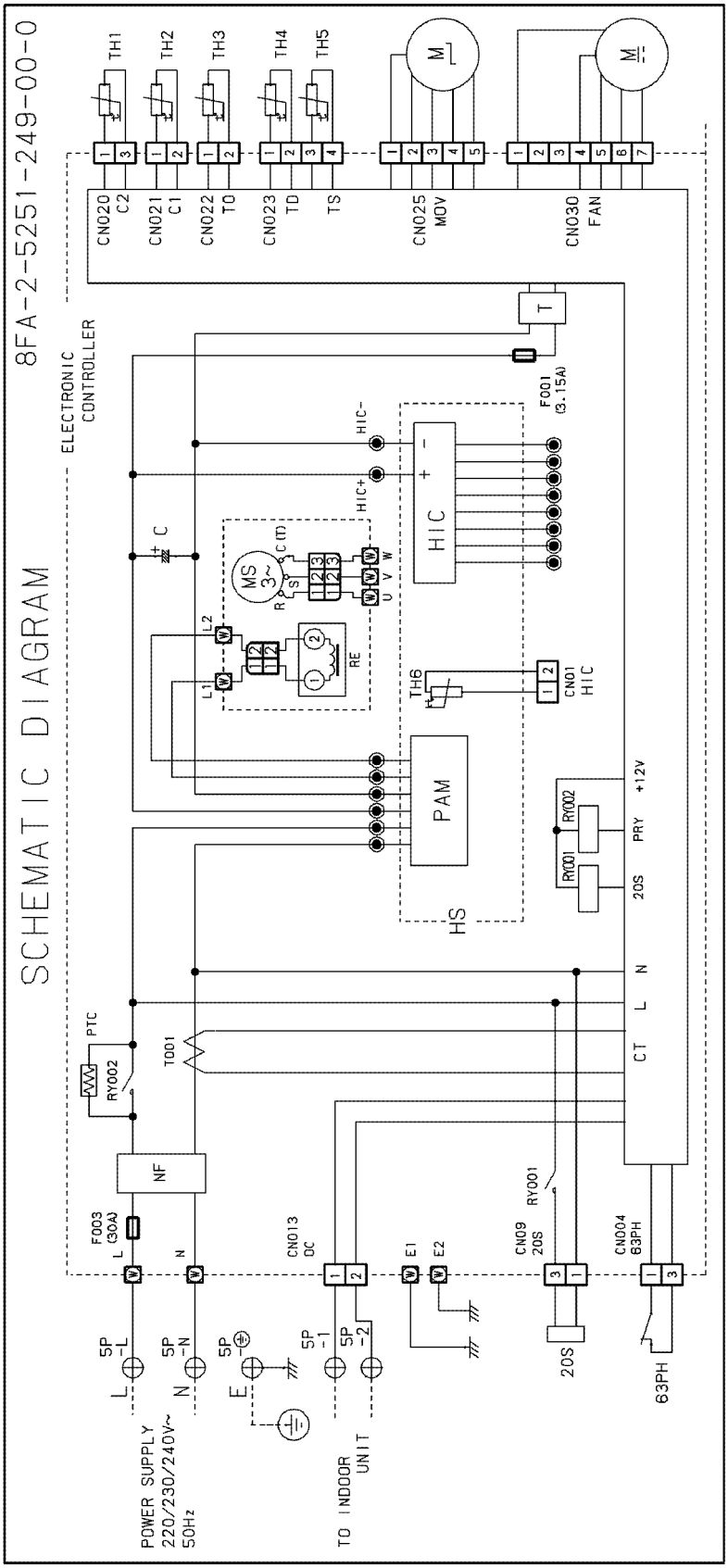

SYMBOLS	DESCRIPTION	SYMBOLS	DESCRIPTION	SYMBOLS	DESCRIPTION	SYMBOLS	DESCRIPTION
MS 3~	COMPRESSOR MOTOR	NF	NOISE FILTER	HS	HEAT SINK (RADIATOR)		THERMISTOR
M	OUTDOOR FAN MOTOR	C	ELECTROLYTIC CAPACITOR	T001	CURRENT TRANSFORMER		CONNECTOR
20S	4-WAY VALVE	RE	REACTOR	PTC	PTC THERMISTOR		LEAD WIRE
M	EXPANSION VALVE	HIC	HYBRID IC	T	TRANSFORMER		TERMINAL BOARD
F001, 003	OPERATION CIRCUIT FUSE	PAM	PAM IC	RY001, 002	RELAY	63PH	PRESSURE SWITCH

WARNING

TURN OFF THE MAIN POWER SUPPLY SWITCH WHEN CHANGING P.C.B.. CONFIRM ALL THE L.E.D.S ON THE P.C.B. ARE OFF AND START TO REWORK. OTHERWISE YOU MAY BE KILLED BY AN ELECTRIC SHOCK.

3-2. Outdoor Units

■ Single-phase U-60PE1E5A / U-71PE1E5A

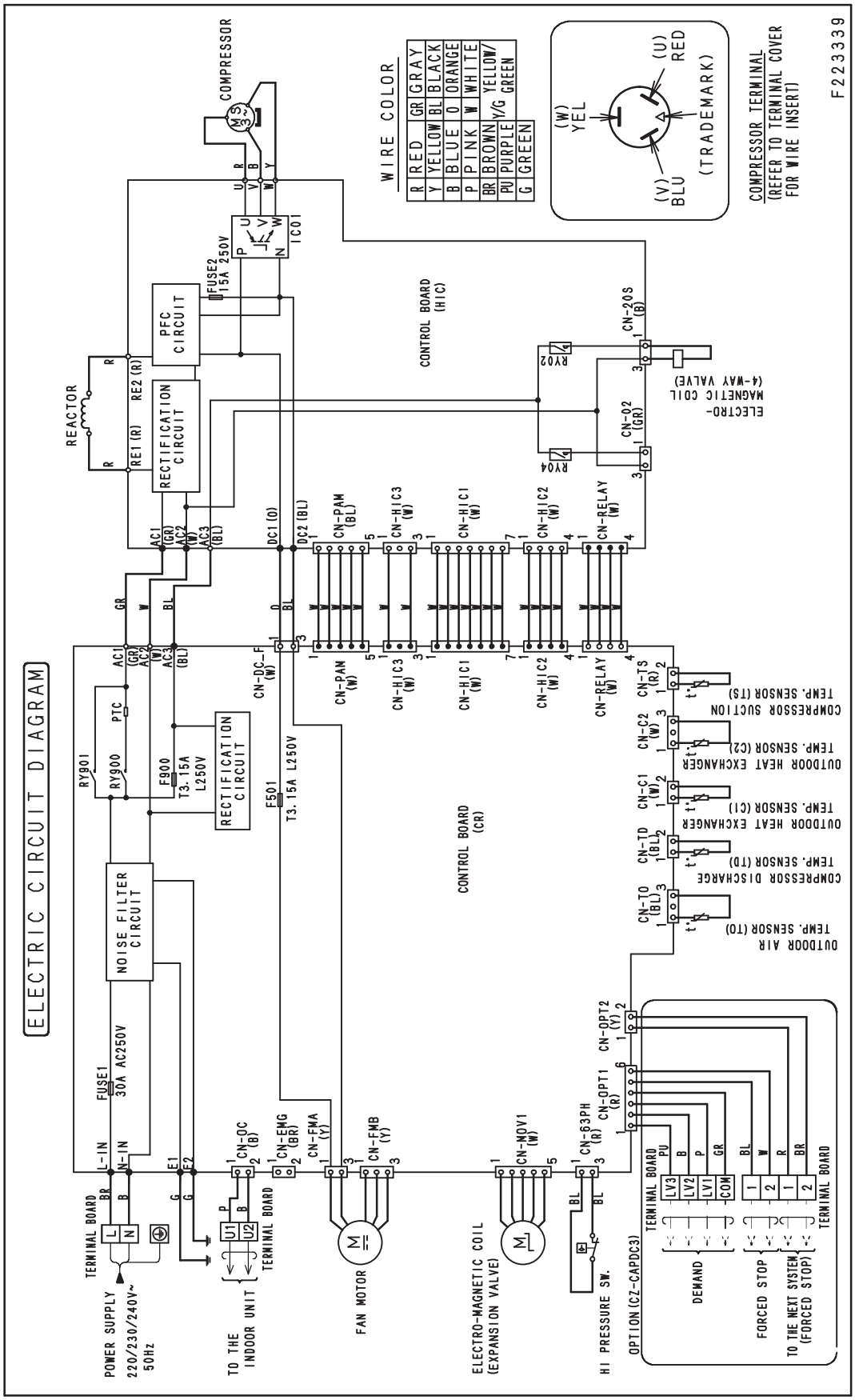

3-2. Outdoor Units

■ Single-phase U-100PE1E5A / U-125PE1E5A / U-140PE1E5A

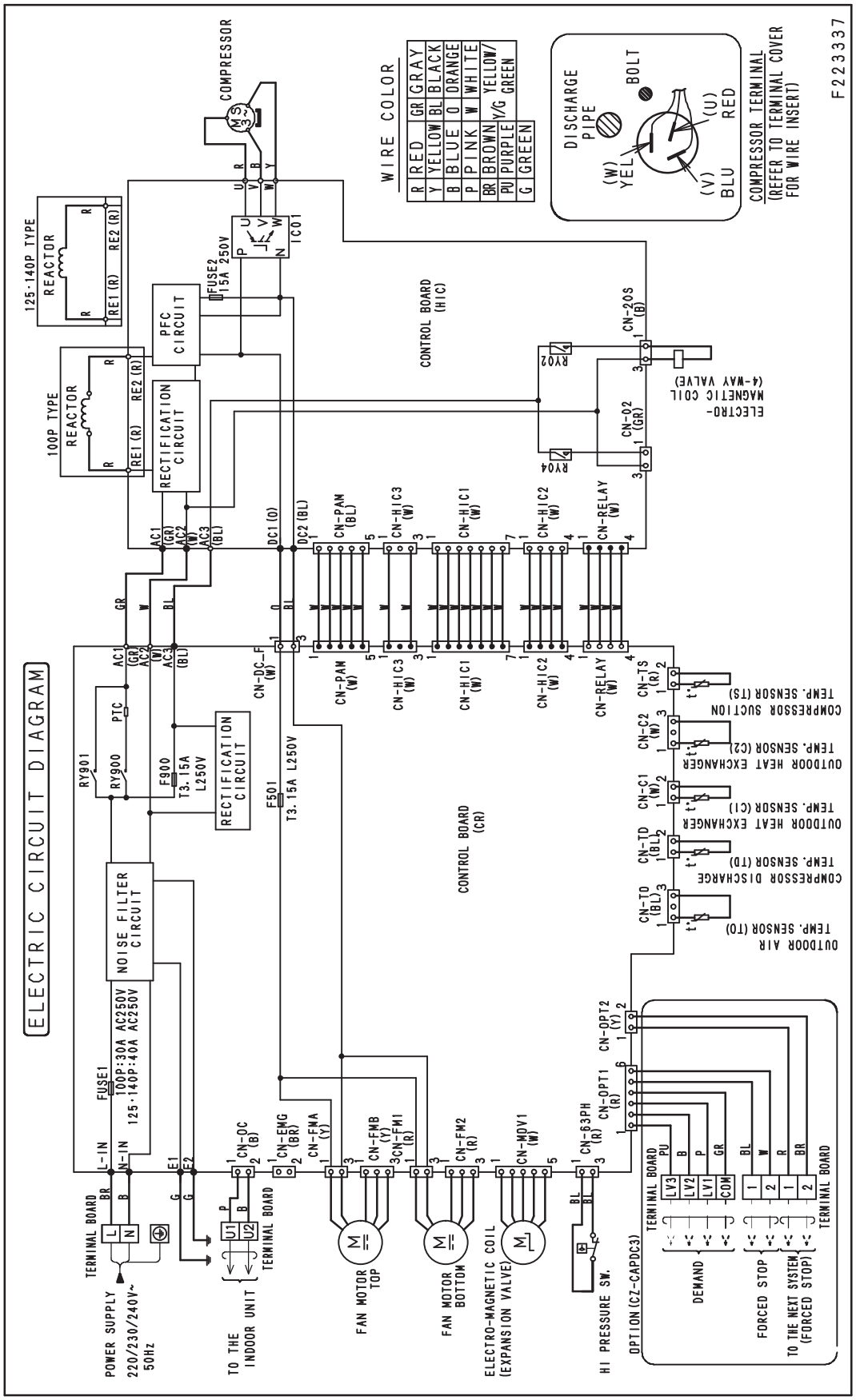

3-2. Outdoor Units

■ Single-phase U-60PEY1E5 / U-71PEY1E5

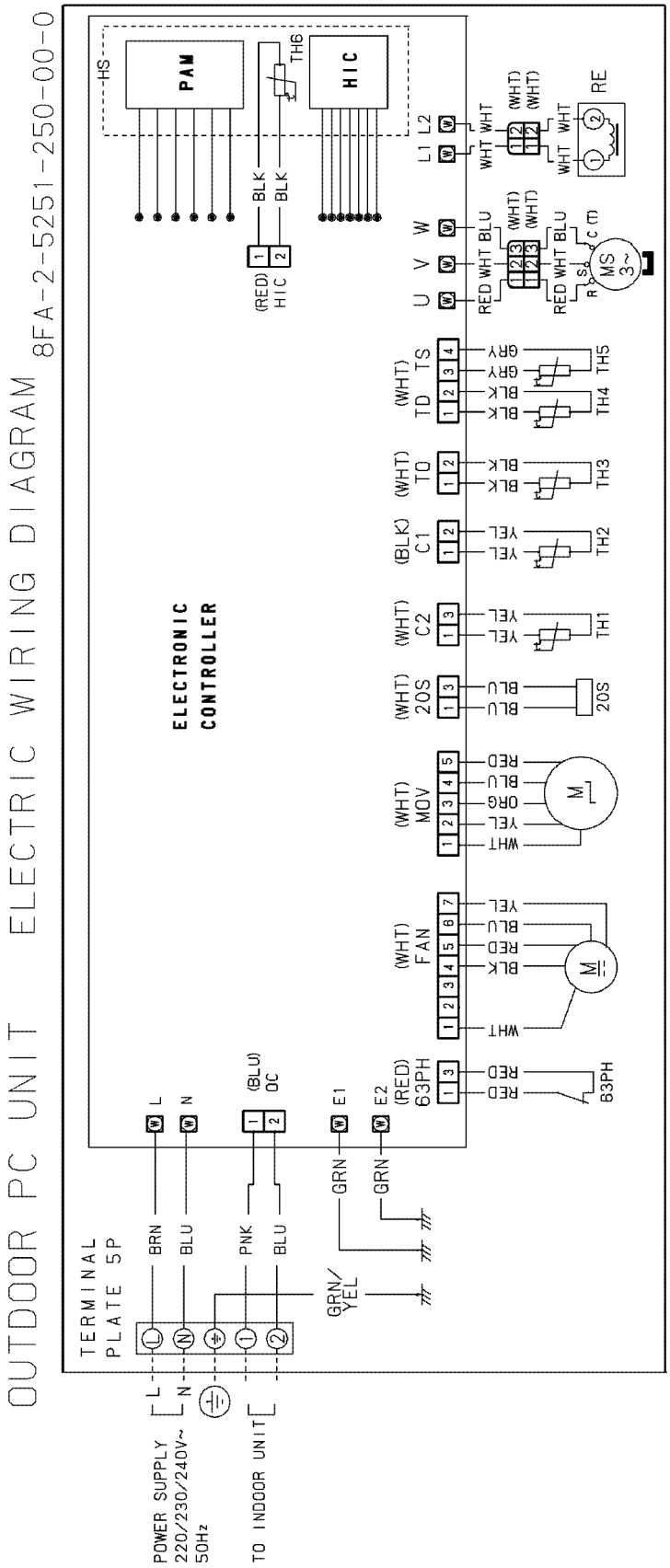

3-2. Outdoor Units

■ Single-phase U-60PEY1E5 / U-71PEY1E5

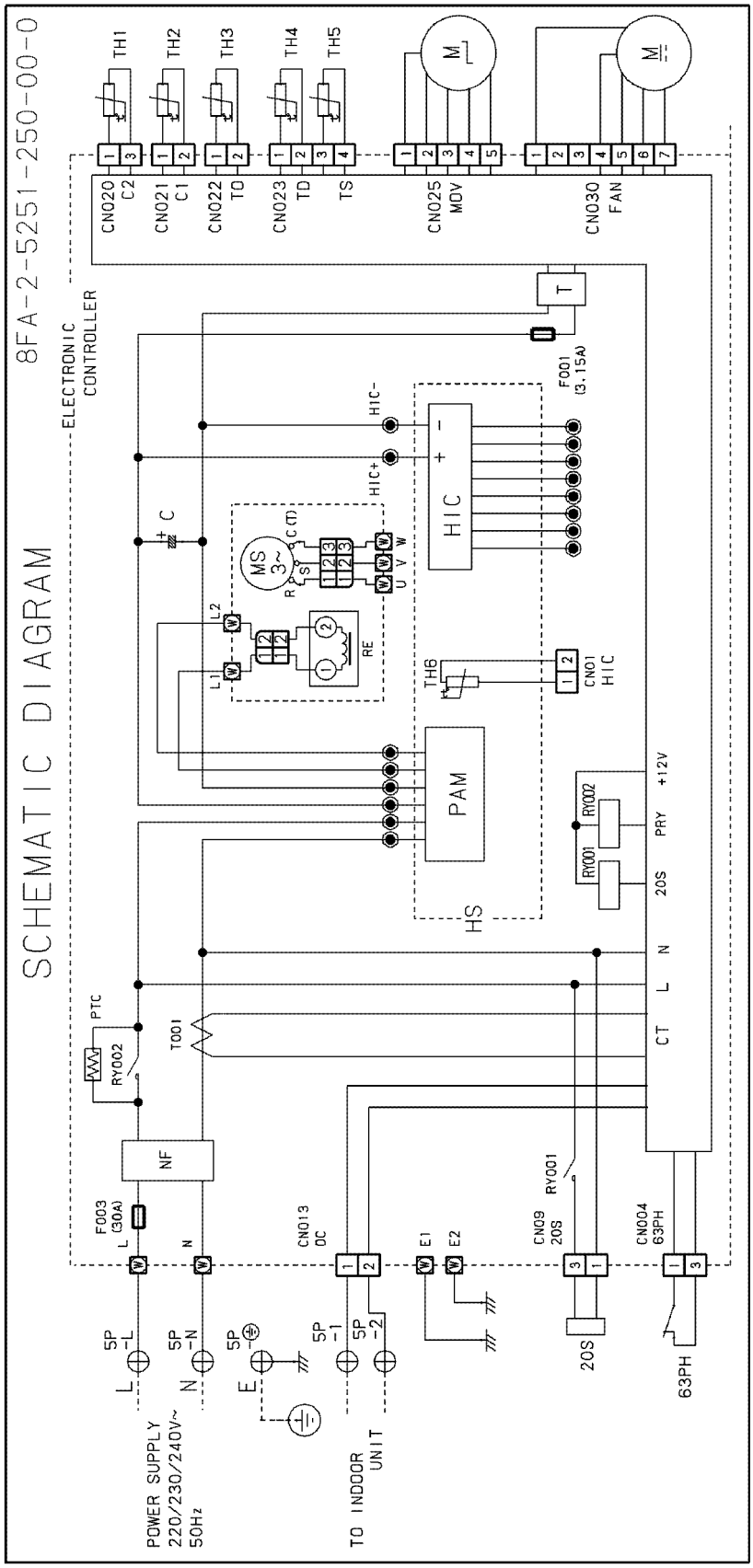

SYMBOLS	DESCRIPTION	SYMBOLS	DESCRIPTION	SYMBOLS	DESCRIPTION	SYMBOLS	DESCRIPTION
MS 3~	COMPRESSOR MOTOR	NF	NOISE FILTER	HS	HEAT SINK (RADIATOR)		THERMISTOR
M	OUTDOOR FAN MOTOR	C	ELECTROLYTIC CAPACITOR	T001	CURRENT TRANSFORMER		CONNECTOR
20S	4-WAY VALVE	RE	REACTOR	PTC	PTC THERMISTOR		LEAD WIRE
M	EXPANSION VALVE	HIC	HYBRID IC	T	TRANSFORMER		TERMINAL BOARD
F001, 003	OPERATION CIRCUIT FUSE	PAM	PAM IC	RY001, 002	RELAY	63PH	PRESSURE SWITCH

WARNING

TURN OFF THE MAIN POWER SUPPLY SWITCH WHEN CHANGING P.C.B.. CONFIRM ALL THE L.E.D.S ON THE P.C.B. ARE OFF AND START TO REWORK. OTHERWISE YOU MAY BE KILLED BY AN ELECTRIC SHOCK.

3-2. Outdoor Units

■ Single-phase U-100PEY1E5 / U-125PEY1E5

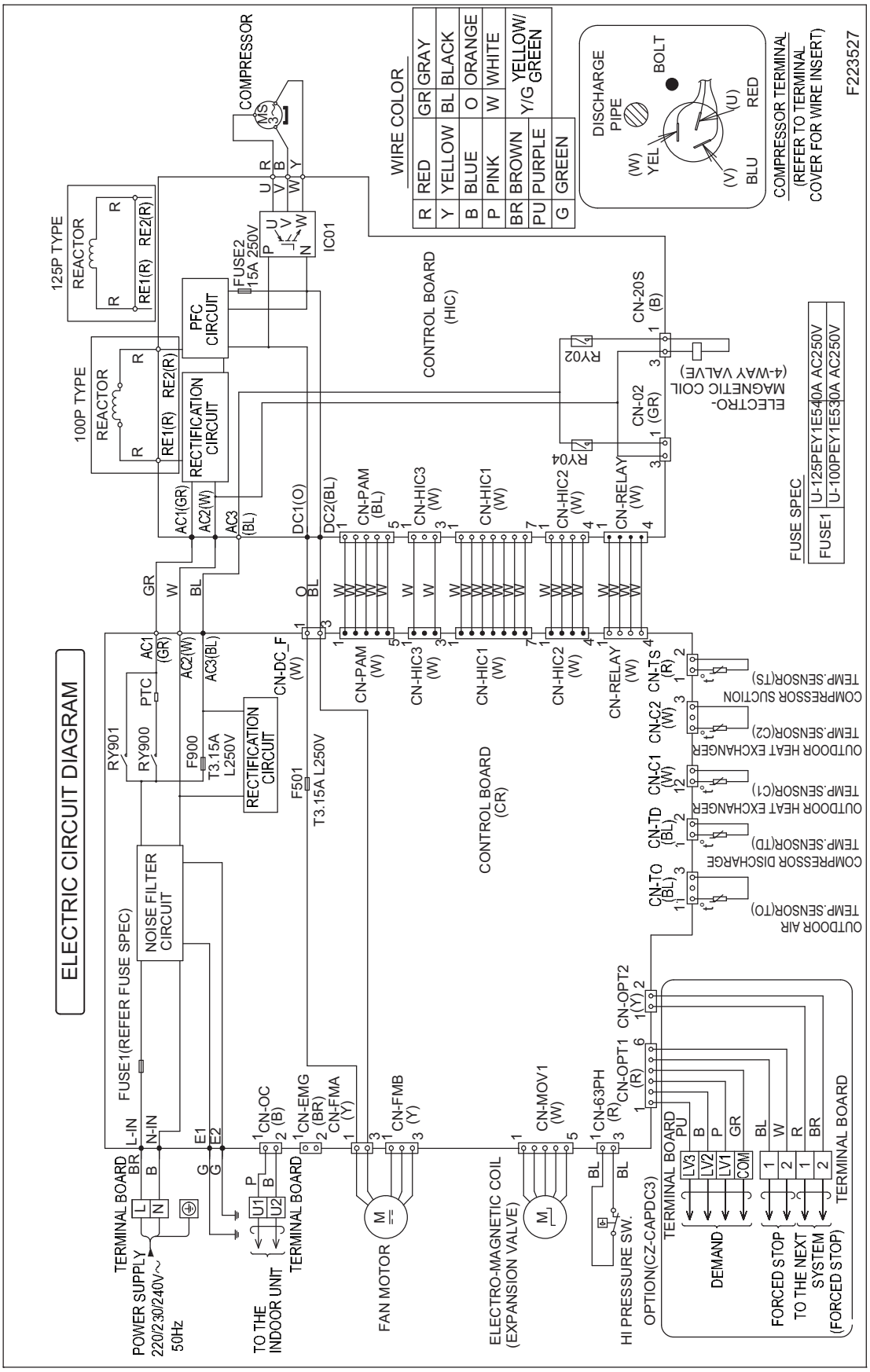

3-2. Outdoor Units

■ 3-phase U-71PE1E8A

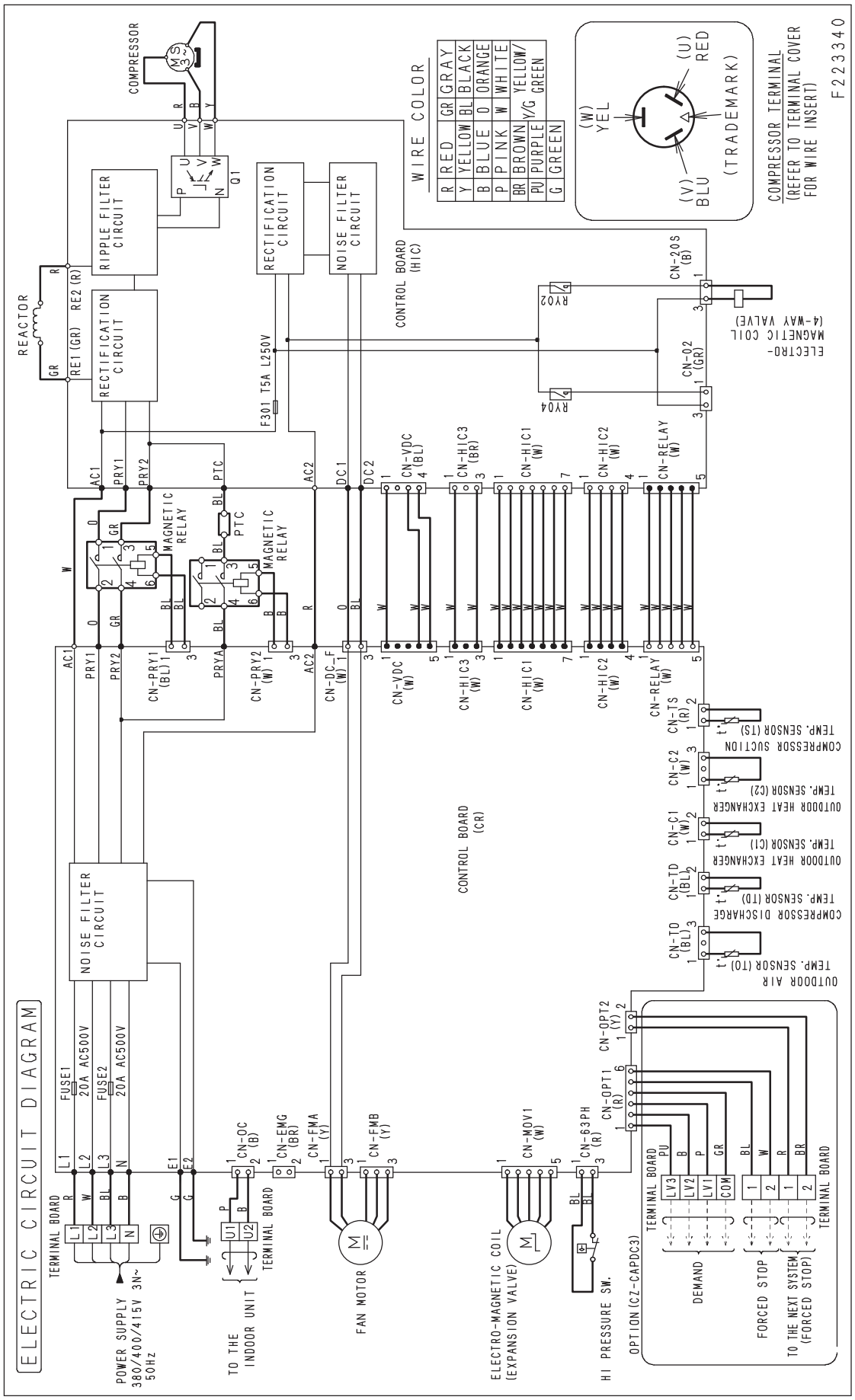

3-2. Outdoor Units

■ 3-phase U-100PEY1E8 / U-125PEY1E8

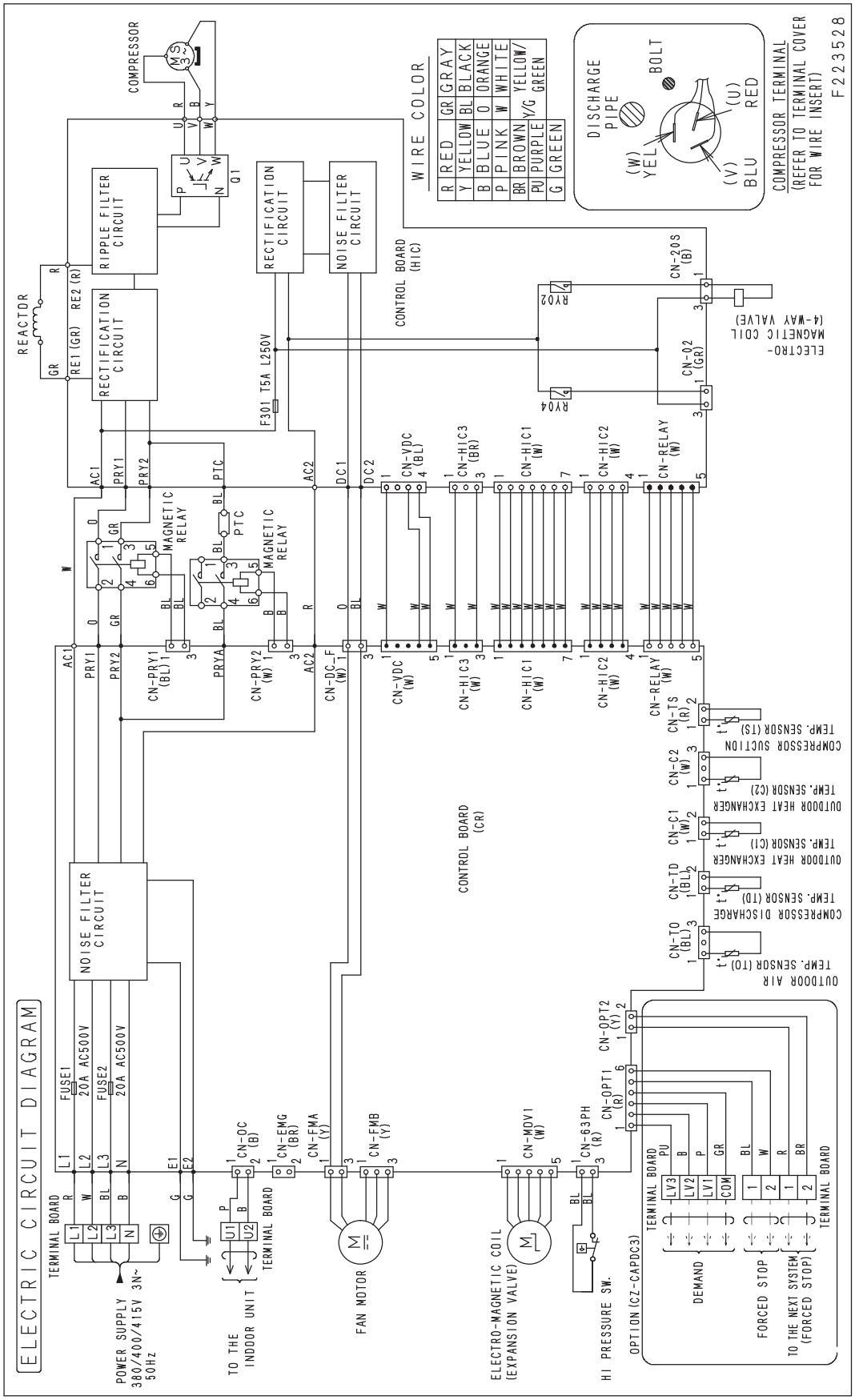

3-2. Outdoor Units

■ 3-phase U-100PE1E8A / U-125PE1E8A / U-140PE1E8A / U-140PEY1E8

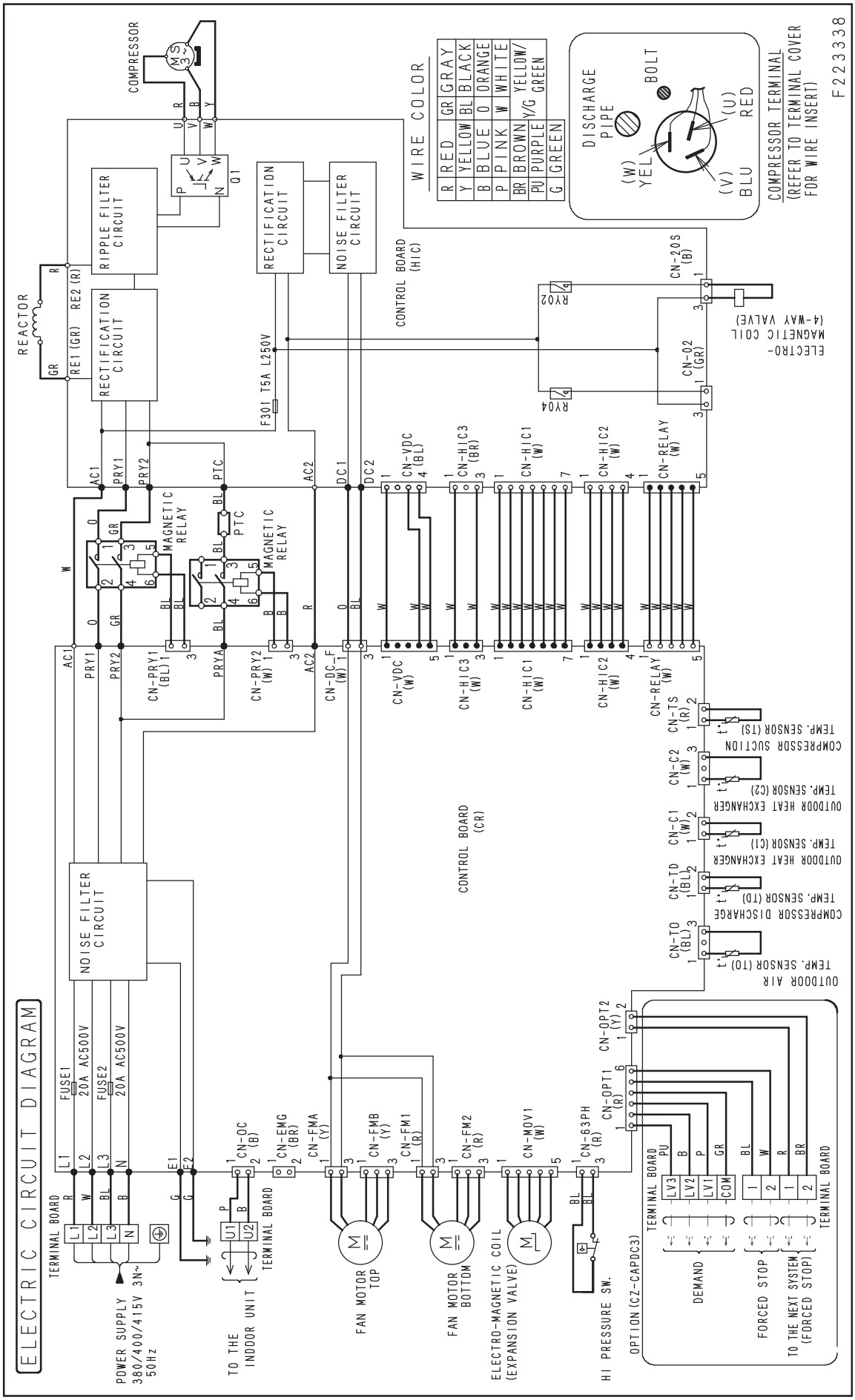

4. CONTROL FUNCTIONS

4-1. Room Temperature Control 4-2
4-2. Heating Standby 4-4
4-3. Automatic Fan Speed Control 4-5
4-4. Drain Pump Control 4-6
4-5. Automatic Heating/Cooling Control 4-7
4-6. Automatic Flap Control 4-8
4-7. Filter Sign 4-8
4-8. Fan Control during Dry Mode 4-9
4-9. Ventilation Fan Output 4-9
4-10. T10 Terminal 4-9
4-11. Parameter 4-10
4-12. Control Functions 4-11
4-13. Outdoor Unit Control PCB 4-23
4-14. Functions of Outdoor Unit PCB 4-43
4-15. Self-Diagnostics Function Table 4-46

4-1. Room Temperature Control

- The body sensor or remote controller sensor detects temperature in the room. The detected temperature is called the room temperature. The body sensor is the one contained in the indoor unit.

	Body sensor is enabled	Remote controller sensor is enabled
Set temp.	Set temp. in remote controller	Set temp. in remote controller
Detected temp. by sensor	Detected temp. by body sensor	Detected temp. by remote controller sensor
Room temp.	Detected temp. by body sensor - *correction temp.	Detected temp. by remote controller sensor

- The thermostat is turned ON or OFF according to the following ΔT.

ΔT (Cooling)	ΔT = room temp. – set temp. (set temp. in remote controller)
ΔT (Heating)	ΔT = set temp. – room temp.

※ Correction temperature (only during heating)
If the indoor unit is installed on the ceiling, temperature near the ceiling is higher than near the floor. When the body sensor is enabled, lower temperature near the floor must be considered. To correct this difference in temperature, the correction temperature is used.

The factory setting for the correction temperature is different depending on the model. Refer to “4-11. Parameter”.

Example: Cooling temperature correction
4-Way Cassette (correction temperature: 0 degrees)
Body sensor is enabled

Set temp. in remote controller	28℃	28℃	28℃
Detected temp. by sensor	30.0℃	27.5℃	27.0℃
Detected temp. by body sensor	30.0℃	27.5℃	27.0℃
Detected temp. by remote controller sensor	30.0℃	27.5℃	27.0℃
Room temp. = temp. detected by body sensor	30.0℃ =30.0	27.5℃ =27.5	27.0℃ =27.0
Δ T	+2.0deg	-0.5deg	-1.0deg
	Thermostat ON	Thermostat ON	Thermostat OFF

Example: Heating temperature correction
4-Way Cassette (correction temperature: 4 degrees)
Body sensor is enabled

Set temp. in remote controller	20℃	20℃	20℃
Detected temp. by sensor	17.0℃	22.0℃	25.0℃
Detected temp. by body sensor	17.0℃	22.0℃	25.0℃
Detected temp. by remote controller sensor	13.0℃	18.0℃	21.0℃
Room temp. = temp. detected by body sensor – 4 deg	13.0℃ =17.0-4 deg	18.0℃ =22.0-4 deg	21.0℃ =25.0-4 deg
Δ T	+7.0deg	+2.0deg	-1.0deg
	Thermostat ON	Thermostat ON	Thermostat OFF

Remote controller sensor is enabled

Set temp. in remote controller	28℃	28℃	28℃
Detected temp. by sensor	30.0℃	27.5℃	27.0℃
Detected temp. by body sensor	30.0℃	27.5℃	27.0℃
Detected temp. by remote controller sensor	30.0℃	27.5℃	27.0℃
Room temp. = temp. detected by remote controller sensor	30.0℃ =30.0	27.5℃ =27.5	27.0℃ =27.0
ΔT	+2.0deg	-0.5deg	-1.0deg
	Thermostat ON	Thermostat OFF	Thermostat OFF

Remote controller sensor is enabled

Set temp. in remote controller	20℃	20℃	20℃
Detected temp. by sensor	17.0℃	20.5℃	21.0℃
Detected temp. by body sensor	21.0℃	24.5℃	25.0℃
Detected temp. by remote controller sensor	17.0℃	20.5℃	21.0℃
Room temp. = temp. detected by remote controller sensor	17.0℃ =17.0	20.5℃ =20.5	21.0℃ =21.0
ΔT	+3.0deg	-0.5deg	-1.0deg
	Thermostat ON	Thermostat OFF	Thermostat OFF

4

Body sensor is enabled

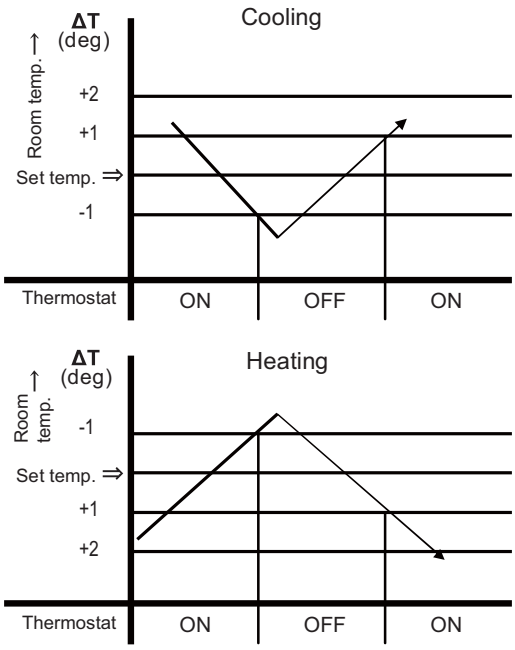

Remote controller sensor is enabled

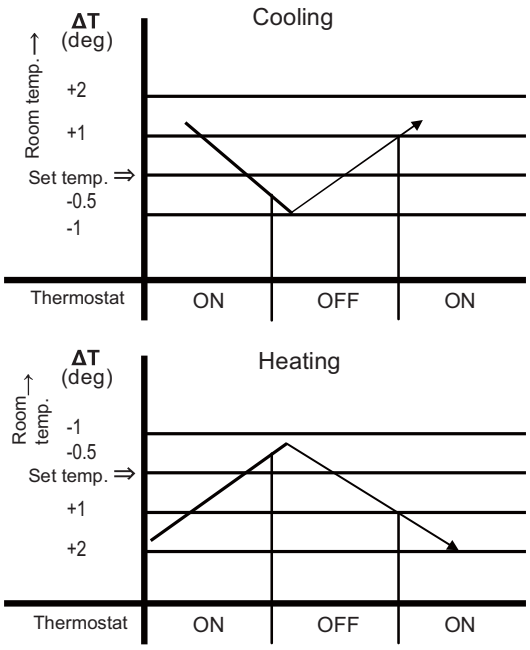

① The thermostat does not turn OFF for 3 minutes after it turns ON.

② The thermostat does not turn ON 1 to 3 minutes after it turns OFF.

③ The thermostat does not turn OFF for 60 minutes during the test run mode. (Forced thermostat ON)
*However, the thermostat turns OFF if an alarm occurs.

4-2. Heating Standby

- In heating mode, the indoor fan speed decreases to prevent cold air discharge from the indoor unit. During this time, (heating standby) is displayed on the remote controller.

① This condition occurs in the following cases.

- Thermostat OFF
- Defrosting operation
- Indoor heat exchanger liquid temperature (E1) < 28˚C and discharge air temperature < 25˚C just after heating operation started
  The fan speed may sometimes increase when this condition continues for 6 minutes.

② The fan mode increases when the heat exchanger liquid temperature (E1) or discharge air temperature increases.

※ The fan mode is selected based on the discharge air temperature and E1 temperature as shown in the below figure. If the E1 temperature and discharge air temperature are different, the higher temperature is used.

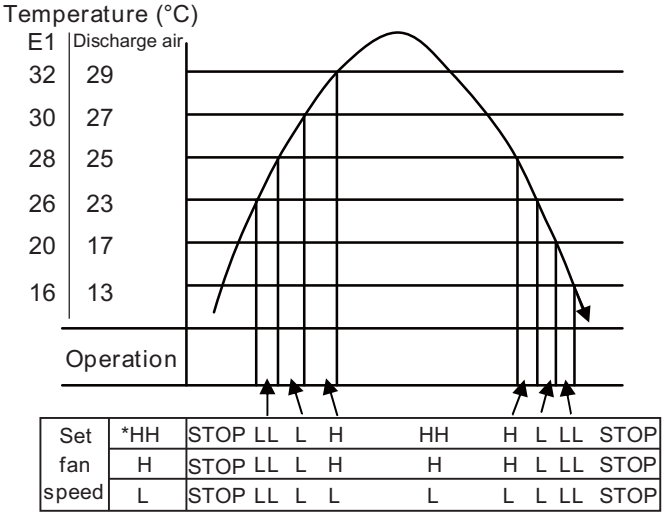

※ The function of "HH" is identical to the automatic fan speed mode.

4-3. Automatic Fan Speed Control

① The indoor fan mode is controlled as shown below during the automatic fan mode.

② The fan mode does not change for 3 minutes during cooling operation and 1 minute during heating operation once it is changed.

③ The values in the parenthesis are when the remote controller sensor is enabled.

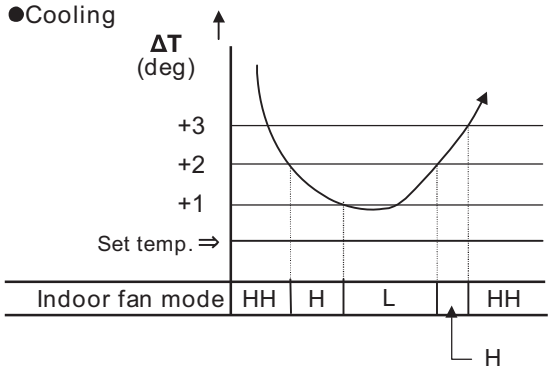

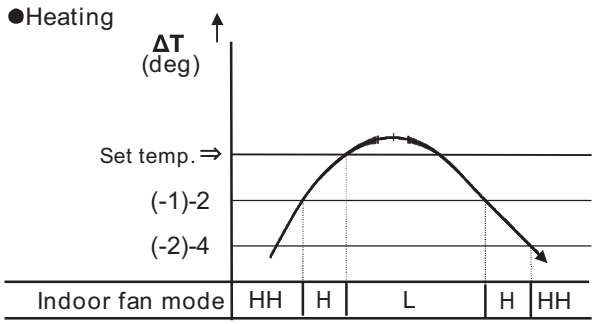

4

4-4. Drain Pump Control

The drain pump operates in the following conditions.

① Cooling thermostat ON

② The float switch worked.

③ The drain pump may often operate for a while when the cooling thermostat turns OFF or the indoor unit is stopped.

④ The drain pump can be turned on when the cooling thermostat is OFF if the setting is made to prevent water collected in the drain pan for a long time. For details, refer to “7-3. Detailed Settings Function.”

⑤ The indoor unit heat exchanger liquid temperature (E1) is less than 0˚C when the cooling thermostat is OFF or the indoor unit is stopped.

※ The drain pump operates for 20 minutes once it starts operating.

4-5. Automatic Heating/Cooling Control

① The operating mode is selected according to the set temperature and room temperature when the operation is started.
Room temperature □ set temperature in remote controller – 1˚C → Cooling mode
Room temperature < set temperature in remote controller – 1˚C → Heating mode

② The set temperature is corrected according to the operating mode. The correction temperature is +2 degrees in cooling mode and -2 degrees in heating mode at the time of factory shipment.

※ The correction value is different depending on the model. Refer to “4-11. Parameter” for details.
Corrected cooling temperature – control temperature for cooling
Corrected heating temperature – control temperature for heating

When setting temperature in remote controller is 20˚C in the cooling mode (at shipment) :

Control temp. for cooling	22˚C
Set temp. in remote controller	20˚C
Control temp. for heating	18˚C

③ Condition for mode change
Heating → Cooling: Room temperature □ Control temperature for cooling + 0.5 degree
Cooling → Heating: Room temperature □ Control temperature for heating -1.0 degree

When setting temperature in remote controller is 20˚C in the cooling mode :

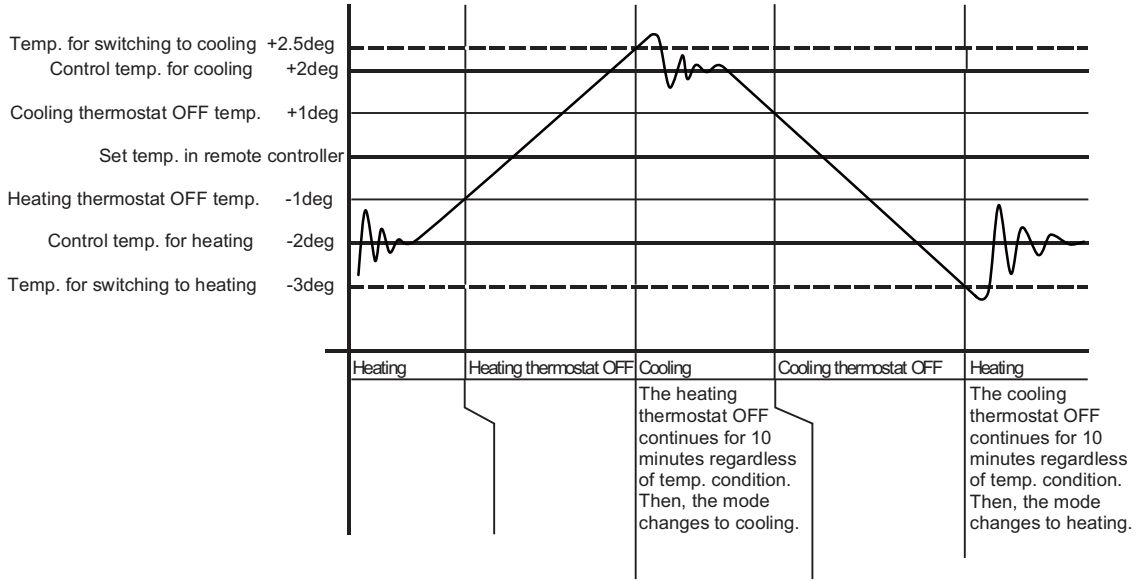

For settings at the time of factory shipment, refer to “4-11. Parameter”.

4-6. Automatic Flap Control

- The flap position can be selected from 5 positions.

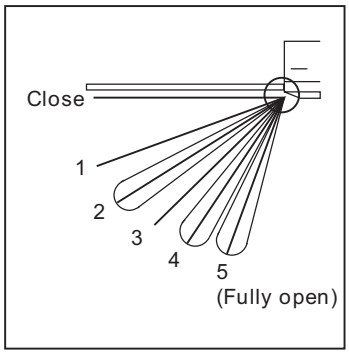

Except ceiling type (T2 type)

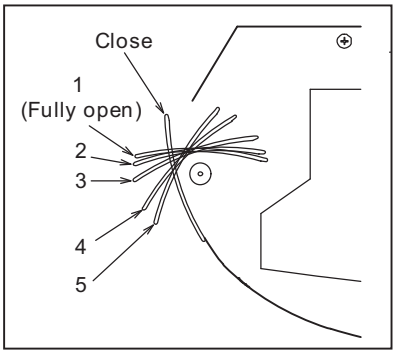

For ceiling type (T2 type)

Operating mode	Flap position
Cooling/Dry	1 ・ 2 ・ 3
Fan	1 ・ 2 ・ 3 ・ 4 ・ 5
Heating	1 ・ 2 ・ 3 ・ 4 ・ 5

① The flap will be closed automatically when the indoor unit is stopped.
Close: Types K1, T1, T2, U1, Y1

② The flap closes once and moves to the set position when the operating mode is changed.
The flap for the ceiling type (T2), however, moves to the set position directly without closing when the operating mode is changed.

NOTE

Do not change the flap position manually.

※ Only the swing operation can be used.

※ The swing operation can be set for the flap.

4-7. Filter Sign

① When accumulated operating time of the indoor unit reaches the set time, the filter sign appears on the remote controller. Clean the filter.
Refer to “7-3. Detailed Setting Function: Simple setting items and Filter sign ON times for each model”.

② After cleaning the filter, press the filter button on the remote controller once. The filter sign turns off.

4-8. Fan Control during Dry Mode

The fan control during dry mode is as follows.

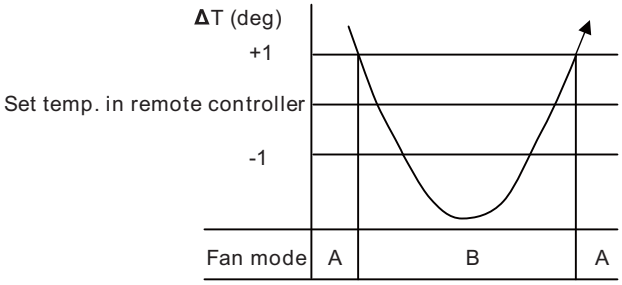

A: Fan mode set in the remote controller

B: Fan mode is L during thermostat ON, LL during thermostat OFF

※ For details on △T, refer to “4-1. Room Temperature Control”.

4-9. Ventilation Fan Output

- The output of ventilation turns ON when the indoor unit turns ON. Also, when the indoor unit turns OFF, the output of the ventilation turns OFF.
- The ventilation fan can also be turned ON and OFF using the ventilation button on the remote controller.

Refer to the operating instructions supplied with the remote controller.

To enable this function, set the indoor EEPROM DN31 to “0001” in advance.

4-10. T10 Terminal

Using the T10 terminal, each indoor unit can be operated or stopped separately. Also, operating condition can be checked.

4-11. Parameter

Type	Model	Correction temp. (heating)	Heat/cool switching correction temp. (automatic heat/cool)
		Setting at time of factory shipment	Setting at time of factory shipment
U1	4-Way Cassette	4 deg	2 deg
Y1	4-Way Cassette 60×60	4 deg	2 deg
T1, T2	Ceiling	4 deg	2 deg
K1	Wall Mounted	2 deg	2 deg
F1	Low Silhouette Ducted	4 deg	2 deg
N1	Ducted	4 deg	2 deg

4-12. Control Functions

- PE Single-phase : U-50PE1E5
- PEY Single-phase : U-60PEY1E5, 71PEY1E5

4-12-1. Indoor Air Temperature Control

The thermostat is switched on and off in accordance with ⊿T shown below.

⊿T= (Indoor air temperature) - (Temperature set with the remote controller)	
In the body thermostat mode (setting at factory shipment)	Indoor air temperature = (Body sensor) - (Shift temperature *)
In the remote controller thermostat mode	Indoor air temperature = (Remote controller sensor)

* Shift Temperature
Only valid during heating operation. Set at 0 °C during cooling operation.
The settings at factory shipment during heating operation are as follows:

Wall Mounted type : 2°C
Floor Standing type : 0°C
All other types (4-way types, Concealed types, etc.) : 4°C

This function acts as the coefficient for adjusting differences in temperature caused by the height of the living space from the floor to the ceiling (the temperature at ceiling height is higher) during heating operation.
The setting can be modified between 0°C and 6°C with mode [06] (Simple Settings Function) on the remote controller.

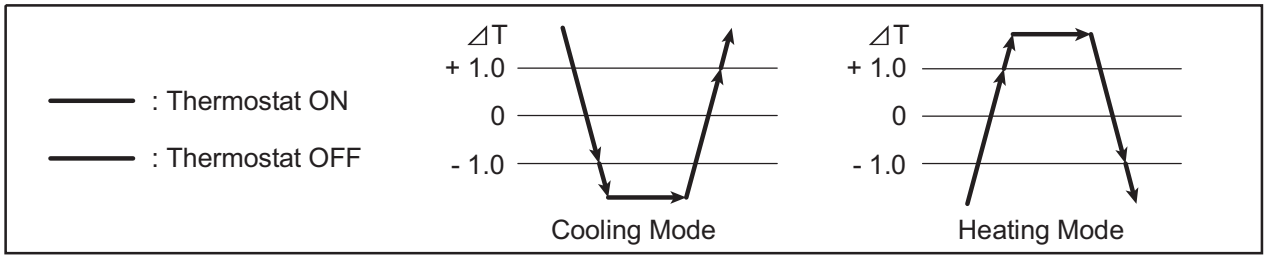

(1) Once the thermostat has been switched on, it cannot be switched off again by indoor air temperature control for a period of 10 minutes.
(2) Once the thermostat has been switched off, it cannot be switched on again for a period of 3 minutes.
(3) When in the test run operation mode, the thermostat will not be switched off by indoor air temperature control and the operation will continue.

4-12-2. Compressor Frequency Control

The frequency of the compressor's inverter is limited by either of the following controls depending on whether the cooling or heating mode is in operation.

Cooling Mode :
- Indoor air temperature control
- Maximum and minimum frequency control
- Current release control
- Cooling high-load prevention control
- Cooling freeze prevention control
- Discharge temperature control

Heating Mode :
- Indoor air temperature control
- Maximum and minimum frequency control
- Current release control
- Heating high-load prevention control
- Discharge temperature control

1) Indoor Air Temperature Control

By the control method, not only the thermostat is switched on and off, as explained section “4-12-1”. Indoor Air Temperature Control ", but also the frequency of the compressor’s inverter is controlled in accordance with ⊿T and fluctuations in indoor air temperature. Inverter frequency is controlled as follows:

When ⊿T is high (not yet reached the temperature set with the remote controller).	Controlled so that the inverter frequency is increased.
When ⊿T is low (approximately +1.0 or less in the cooling mode or approximately -1.0 or more in the heating mode).	Controlled so that the inverter frequency is decreased or kept.
When the indoor air temperature is rising in the cooling mode and dropping in the heating mode.	Controlled so that the inverter frequency is increased.
When the indoor air temperature is dropping in the cooling mode and rising in the heating mode.	Controlled so that the inverter frequency is decreased.

* The fluctuations of the compressor inverter frequency adjustments are calculated taking into account not only ⊿T, but also fluctuations in indoor air temperature.

4

2) Maximum and Minimum Frequency Control

The compressor’s inverter frequency is controlled in accordance with the model and operation mode.
The maximum and minimum frequencies for each model are shown in the table below.
* There are cases in which frequency is limited with other control functions depending on operational conditions, so operations are not always carried out in accordance with the maximum frequencies listed below.

□Maximum and minimum frequency

		50PE	60PEY	71PEY
Maximum Frequency (Hz)	Cooling	87.0	93.0	98.0
	Heating	108.0	99.0	103.2
Minimum Frequency (Hz)	Cooling	15.0*	15.0*	15.0*
	Heating	15.0*	15.0*	15.0*

* There is a case in which the frequency is set at 24.0Hz to protect the compressor in accordance with ambient temperature and indoor loads.

3) Current Release Control

The inverter frequency is controlled so that the current value for the inverter compressor is less than the figure listed in the table below in order to prevent abnormal increases in the inverter circuit located within the outdoor unit’s electrical box.

Current release control with primary current : The limited values are modified in accordance with ambient temperature.

		50PE	60PEY	71PEY
Is (A)	Cooling	10.2	15.0	15.0
	Heating	12.0	18.0	18.0

NOTE

The limited values are lowered under the following conditions.

Cooling : ambient temperature □40°C
Heating : ambient temperature □10°C

4) Cooling High-Load Prevention Control

This system control is performed to limit the inverter frequency in order to restrict high pressure's abnormal increase and high-load operating prevention in the cooling mode.
In accordance with the temperature of the outdoor heat exchanger temperature sensors (C1, C2), such controls are performed as to halting the operations of the indoor unit, decreasing the inverter frequency and restricting its increase, etc.
When the maximum temperatures sensor (C1, C2) exceeds 64°C, operations of the indoor unit are halted and restarted after 3 minutes.
If this start/stop activity is repeated 10 times, the alarm "P20" (cooling high-load error) occurs.

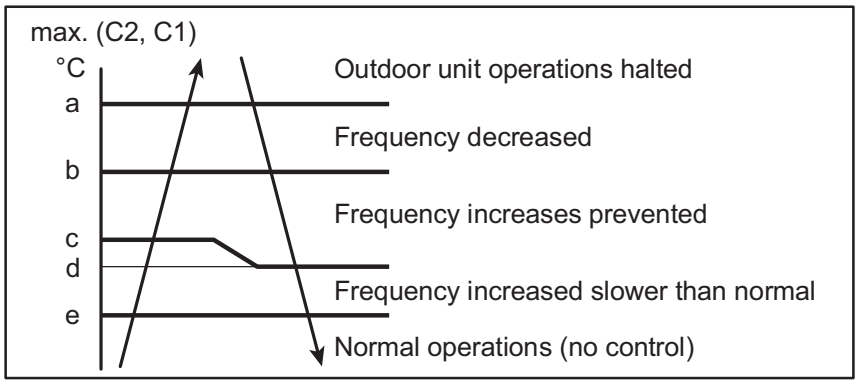

unit :°C

		50PE	60PEY	71PEY
Control point	a	64	64	64
	b	61	59	59
	c	59	58	58
	d	58	57	57
	e	53	53	53

4

5) Heating High-Load Prevention Control

This system control is performed to limit the inverter frequency in order to restrict high pressure's abnormal increase and high-load operating prevention in the heating mode.
In accordance with the temperature of the indoor heat exchanger temperatures sensor (E1, E2), such controls are performed as to halting the operations of the indoor unit, decreasing the inverter frequency and restricting its increase, etc.
When the maximum temperatures sensor (E1, E2) exceeds 65°C, the outdoor unit operation is halted and restarted after 3 minutes.

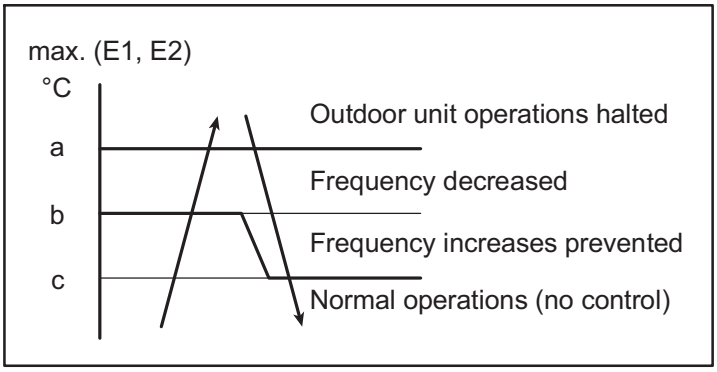

unit :°C

		50PE	60PEY	71PEY
Control point	a	65	65	65
	b	54 (56)	54 (56)	54 (56)
	c	52	52	52

6) Cooling Freeze Prevention Control

The following control is performed during cooling operations (including dry mode operation), in accordance with whichever of the indoor heat exchanger temperatures (E1 or E2) is lower. (See the chart below.)

(1) If the temperature remains in the "□" zone (decreasing operation frequency and thermostat OFF zone) for 6 minutes, the operating frequency of the compressor is decreased.
The operation frequency is amended every 30 seconds as long as the temperature is in this zone.

(2) If the temperature is in the "K" zone (operating frequency increase prevention zone), the operating frequency of the compressor is maintained.

(3) If the temperature is in the "H" zone (operating frequency restriction zone) and the ambient temperature is less than 32°C, the maximum operating frequency of the compressor is limited in accordance with the indoor unit fan speed.

(4) If the temperature is in the "I" zone (normal operation zone), normal operations are performed.

(5) If the temperature is continuously in the "□" zone with the compressor□s operating frequency reaches "0", then temperature A, which is temperature for changing from the "□" zone to the "H" zone, is raised from 5°C to 8°C, and operation continues with the thermostat off until the temperature enters the "H" zone.

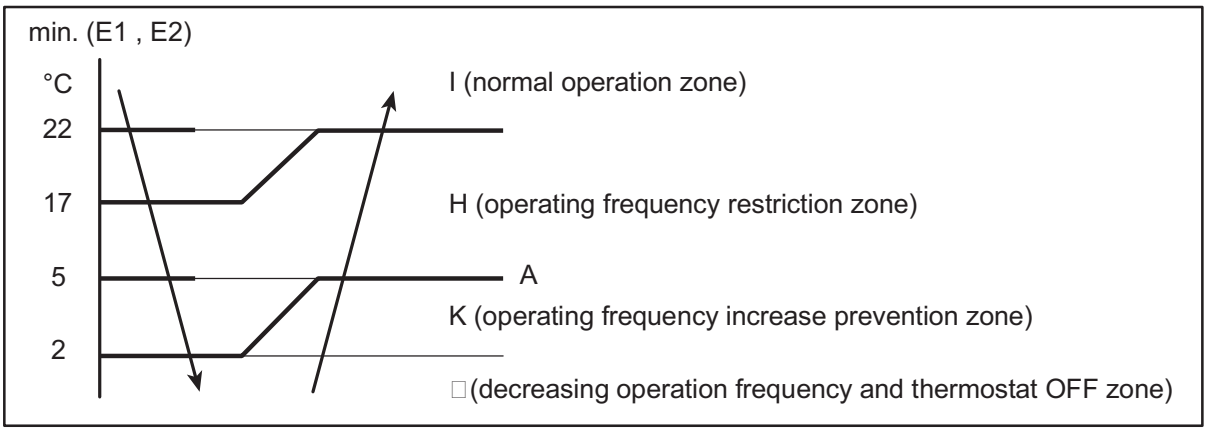

7) Discharge Temperature Control

The following control is performed to prevent the discharge temperature from rising abnormally in order to protect the inverter compressor.
In accordance with the temperature of the discharge sensor TD, such controls are performed as to limiting the increase of inverter frequency, decreasing it or halting operation of the compressor.

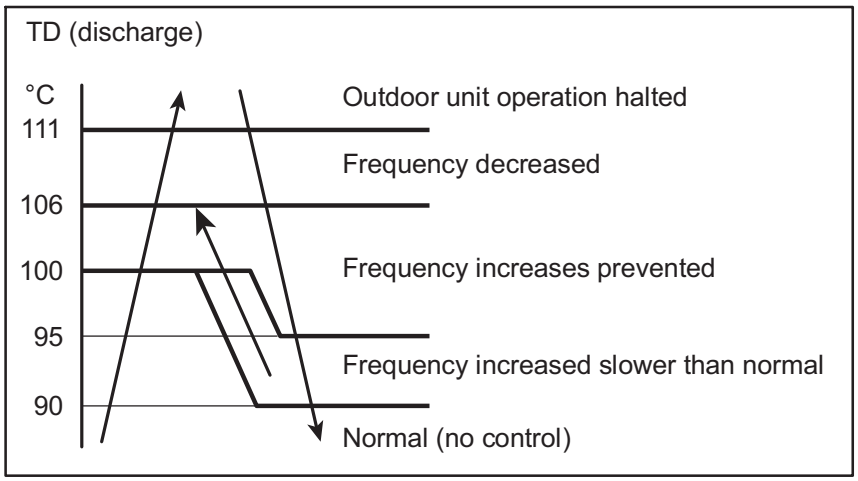

* If the discharge temperature exceeds 111°C, operations of the compressor are halted and restarted after 3 minutes.
If this start/stop activity is repeated 4 times, the alarm "P03" (abnormal discharge temperature) occurs.

8) Defrosting Control

This control function removes frost that has adhered to the outdoor heat exchanger during the heating operation. The control is performed to prevent the deterioration of the heating capabilities attributed to the adherence of frost, and to prevent the crack or crush of pipes attributed to the accretion of ice.
The following control is performed in accordance with the ambient temperature and the outdoor heat exchanger temperature sensor (C1).

Overall Flow Chart of Defrosting Control

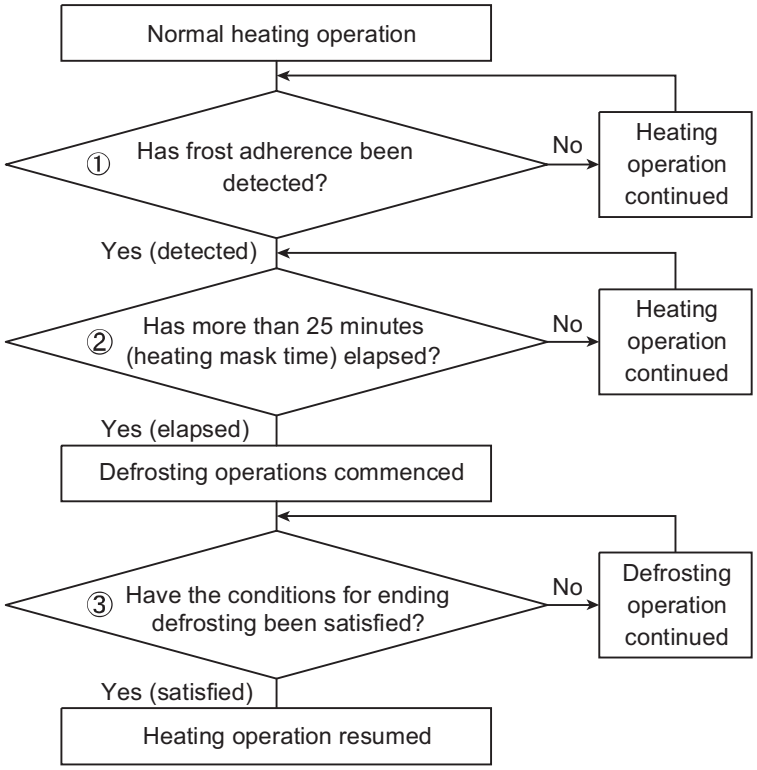

① Frost adherence detection

- If the following conditions are satisfied during heating operations, it is regarded as "frost adherence is detected".
- Frost adherence detection is performed in accordance with the ambient temperature (TO) and the outdoor heat exchanger temperature sensor (C1).
- Frost adherence detection conditions

(a) In case of ambient temperature (TO) □-13°C :
Defrosting condition zone (below chart) for consecutive 3 minutes
or
Defrosting condition zone (below chart) for accumulation of 60 minutes
or
Outdoor heat exchanger temperature sensor (C1) □-18 °C (consecutive 20 seconds)
is detected.

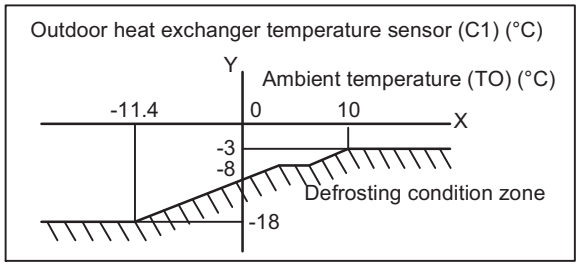

(b) In case of ambient temperature (TO) □-13°C :
Following satisfied condition is detected for consecutive 20 seconds.
Outdoor heat exchanger temperature sensor (C1) □Ambient temperature (TO) - 5 °C

(c) Following satisfied condition is detected for accumulation of over 90 minutes.
Outdoor heat exchanger temperature sensor (C1) □-3 °C

② Heating Mask Time

This refers to the shortest time that heating operations must be performed without defrosting operations being executed. The mask time for this model is 25 minutes.

* Defrosting operations will not be commenced until the defrosting mask time has elapsed, even if frost adherence has been detected.

③ Ending Defrosting

Defrosting operations are ended when the following conditions are satisfied.

- Ending defrosting conditions

(a) When the temperature of the outdoor heat exchanger temperature sensor (C1) is 12°C or higher.

(b) When the temperature of the outdoor heat exchanger temperature sensor (C1) is 7°C or higher for consecutive 60 seconds.

(c) When a maximum of 15 minutes defrosting time has elaped.

9) Outdoor Unit Fan Control

The appropriate rotations per minute for the outdoor unit fan are determined in accordance with the ambient temperature and the frequency of the compressor inverter.
The outdoor unit fan step is controlled between a range of W1 (Step 1) and WF (Step 15).

10) Outdoor Unit's Electrical Expansion Valve Control

The electrical expansion valve controls the amount of refrigerant that is allowed to flow in accordance with the operation status.
The valve is adjusted in accordance with the discharge temperature (TD), the outdoor heat exchanger temperature sensor (C1), the suction temperature sensor (TS), and the indoor unit's heat exchanger temperature sensors (E1 and E2).

4

(1) Cooling Mode

Controlled so that the suction temperature (TS) - indoor heat exchanger temperature minimum (E1 and E2) is between 1 degree and 5 degrees under normal conditions.
There are cases where the aperture opens wider than usual if the discharge temperature increases.

(2) Heating Mode

Controlled so that the suction temperature (TS) - outdoor heat exchanger temperature (C1) is between 0 degree and 5 degrees under normal conditions.
There are cases where the aperture opens wider than usual if the discharge temperature increases.

11) Demand Control

There are two styles of demand operations available as methods of restraining power consumption.

(1) Demand via External Input

Demand input from an external source is carried out from the outdoor unit EXCT (CN026) PCB or the outdoor unit's serial/parallel I/O (optional).

- Demand control with EXCT input

Short-circuit		Control (range of operations)
2P and 3P	1P and 3P	
0	0	No ristricted
0	1	Rated current restricted to A□ (A□ = 100□ at factory shipment)
1	0	Rated current restricted to B□ (B□ = 70□ at factory shipment)
1	1	Control OFF

* The operational current is restricted to either A□ or B□ as a general indicator during demand input.

- A□ and B□ can be amended in calibrations of 5□ between 70□ and 100□ with the outdoor unit's maintenance remote controller.
  For details on how to amend the parameters, see the chapter on the outdoor maintenance remote controller, (refer to the section "6-6. Settings Modes : Setting the Outdoor Unit EEPROM").
- A□ value amendments: Parameters are amended with item code "50" (demand 1).
- B□ value amendments: Parameters are amended with item code "51" (demand 2).

(2) Demand Control with No External Input

Demand control is carried out proportionally with the normal settings from the outdoor unit without any external input.

- Amendments can be made in calibrations of 5□ between 0□ and 100□.
  Refer to the section "6-6. Settings Modes : Setting the Outdoor Unit EEPROM" for the outdoor maintenance remote controller for details on how to amend the parameters.
  Parameters are amended with item code "52" (current control level).

- PE Single-phase : U-60PE1E5A, 71PE1E5A, 100PE1E5A, 125PE1E5A, 140PE1E5A
- PE 3-phase : U-71PE1E8A, 100PE1E8A, 125PE1E8A, 140PE1E8A
- PEY Single-phase : U-100PEY1E5, 125PEY1E5
- PEY 3-phase : U-100PEY1E8, 125PEY1E8, 140PEY1E8

4-12-3. Indoor Air Temprature Control

The thermostat is switched on and off in accordance with ⊿T shown below.

⊿T= (Indoor air temperature) - (Temperature set with the remote controller)	
In the body thermostat mode (setting at factory shipment)	Indoor air temperature = (Body sensor) - (Shift temperature *)
In the remote controller thermostat mode	Indoor air temperature = (Remote controller sensor)

* Shift Temperature
Only valid during heating operation. Set at 0 °C during cooling operation.
The settings at factory shipment during heating operation are as follows:

Wall Mounted type : 2°C
Floor Standing type : 0°C
All other types (4-way types, Concealed types, etc.) : 4°C

This function acts as the coefficient for adjusting differences in temperature caused by the height of the living space from the floor to the ceiling (the temperature at ceiling height is higher) during heating operation.
The setting can be modified between 0°C and 6°C with mode [06] (Simple Settings Function) on the remote controller.

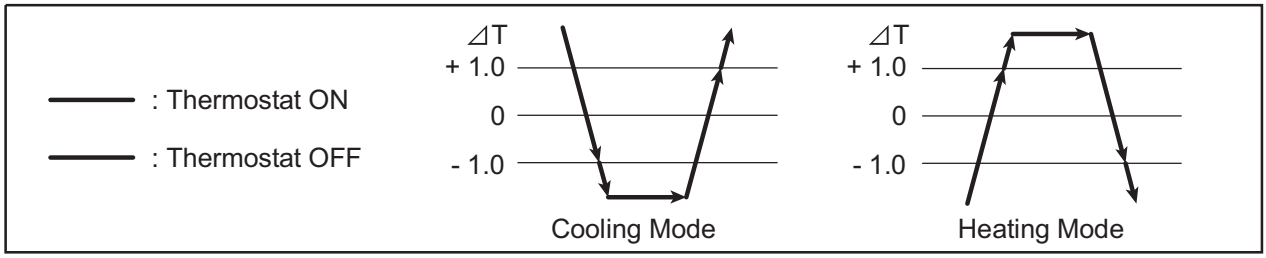

(1) Once the thermostat has been switched on, it cannot be switched off again by indoor air temperature control for a period of 10 minutes.
(2) Once the thermostat has been switched off, it cannot be switched on again for a period of 3 minutes.
(3) When in the test run operation mode, the thermostat will not be switched off by indoor air temperature control and the operation will continue.

4-12-4. Compressor Frequency Control

The frequency of the compressor's inverter is limited by either of the following controls depending on whether the cooling or heating mode is in operation.

Cooling Mode :
- Indoor air temperature control
- Maximum and minimum frequency control
- Current release control
- Cooling high-load prevention control
- Cooling freeze prevention control
- Discharge temperature control

Heating Mode :
- Indoor air temperature control
- Maximum and minimum frequency control
- Current release control
- Heating high-load prevention control
- Discharge temperature control

1) Indoor Air Temperature Control

By the control method, not only the thermostat is switched on and off, as explained section “4-12-3”. Indoor Air Temperature Control ", but also the frequency of the compressor□s inverter is controlled in accordance with ⊿T and fluctuations in indoor air temperature. Inverter frequency is controlled as follows:

When ⊿T is high (not yet reached the temperature set with the remote controller).	Controlled so that the inverter frequency is increased.
When ⊿T is low (approximately +1.0 or less in the cooling mode or approximately -1.0 or more in the heating mode).	Controlled so that the inverter frequency is decreased or kept.

2) Maximum and Minimum Frequency Control

The compressor□s inverter frequency is controlled in accordance with the model and operation mode.
The maximum and minimum frequencies for each model are shown in the table below.

* There are cases in which frequency is limited with other control functions depending on operational conditions, so operations are not always carried out in accordance with the maximum frequencies listed below.

· Maximum and Minimum Frequency

		PE					PEY		
		60PE1E5A	71PE1E5A 71PE1E8A	100PE1E5A 100PE1E8A	125PE1E5A 125PE1E8A	140PE1E5A 140PE1E8A	100PEY1E5 100PEY1E8	125PEY1E5 125PEY1E8	140PEY1E8
Maximum Frequency (Hz)	Cooling	70.0	70.0	55.0	65.0	75.0	70.0	59.0	75.0
	Heating	85.0	85.0	90.0	95.0	100.0	99.0	80.0	95.0
Minimum Frequency (Hz)	Cooling	15.0	15.0	15.0	15.0	15.0	15.0	15.0	15.0
	Heating	15.0	15.0	15.0	15.0	15.0	15.0	15.0	15.0

* There is a case in which the frequency set at maximum and minimum may sometimes decrease in accordance with ambient temperature and indoor loads.

3) Current Release Control

The inverter frequency is controlled so that the current value for the inverter compressor is less than the figure listed in the table below in order to prevent abnormal increases in the inverter circuit located within the outdoor unit□s electrical box.

Current release control with primary current : The limited values are modified in accordance with ambient temperature.

		PE					PEY		
		60PE1E5A	71PE1E5A	100PE1E5A	125PE1E5A	140PE1E5A	100PEY1E5	125PEY1E5	□
Is (A)	Cooling	14.5	14.5	24.0	26.0	27.0	24.0	27.0	□
	Heating	18.0	18.0	24.0	26.0	28.0	24.0	27.0	□
		□	71PE1E8A	100PE1E8A	125PE1E8A	140PE1E8A	100PEY1E8	125PEY1E8	140PEY1E8
Is (A)	Cooling	□	6.0	8.0	8.6	9.0	8.0	9.0	9.0
	Heating	□	7.0	8.5	9.5	10.5	8.5	9.5	9.5

4) Condensation Temperature Control (cooling)

This system control is performed to limit the inverter frequency in order to restrict high pressure's abnormal increase and high-load operating prevention in the cooling mode.
In accordance with the temperature of the outdoor heat exchanger temperature sensors (C1, C2), such controls are performed as to halting the operations of the indoor unit, decreasing the inverter frequency and restricting its increase, etc.

(a) The threshold value is decreased in accordance with the compressor frequency or indoor load (differences of temperature).
(b) When "X" values are lowered, the results basically become β=X-2, α=X-3.

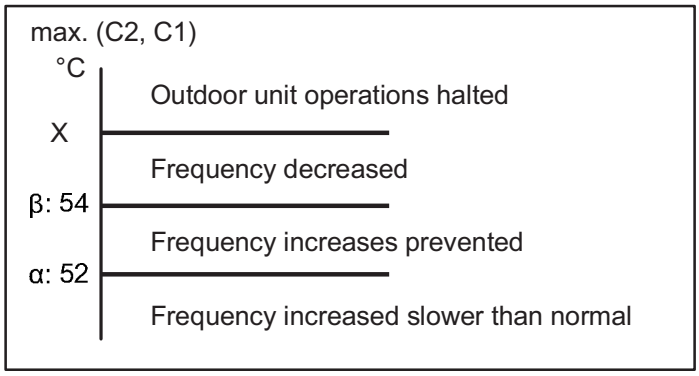

Outdoor EEPROM : Amendment of X values can be made due to 4B.

EEPROM setting in outdoor unit
CODE: 4B

Setting No.	-2	-1	0 *1	1 *2
X (°C)	52	56.5	58.5	60

*1 PE type : Setting at factory shipment
*2 PEY type : Setting at factory shipment

4

5) Condensation Temperature Control (heating)

This system control is performed to limit the inverter frequency in order to restrict high pressure's abnormal increase and high-load operating prevention in the heating mode.
In accordance with the temperature of the indoor heat exchanger temperatures sensor (E1, E2), such controls are performed as to halting the operations of the indoor unit, decreasing the inverter frequency and restricting its increase, etc.

(a) The threshold value is decreased in accordance with the compressor frequency or indoor load (differences of temperature).
(b) When "X" values are lowered, the results basically become β=X-2, α=X-3.

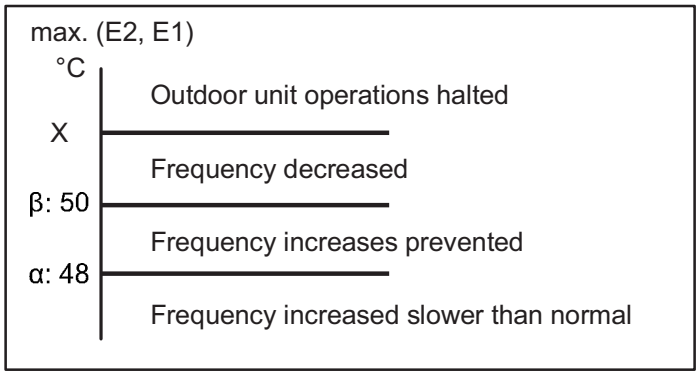

Outdoor EEPROM : Amendment of X values can be made due to 4B.

EEPROM setting in outdoor unit
CODE: 4B

Setting No.	-2	-1	0 *1	1 *2
X (°C)	52	56.5	58.5	60

*1 PE type : Setting at factory shipment
*2 PEY type : Setting at factory shipment

6) Cooling Freeze Prevention Control

The following control is performed during cooling operations (including dry mode operation), in accordance with whichever of the indoor heat exchanger temperatures (E1 or E2) is lower. (See the chart below.)

(a) Frequency will not be decreased less than 6 minutes after thermostat ON.

(b) The threshold value is increased in accordance with the indoor load (differences of temperature).

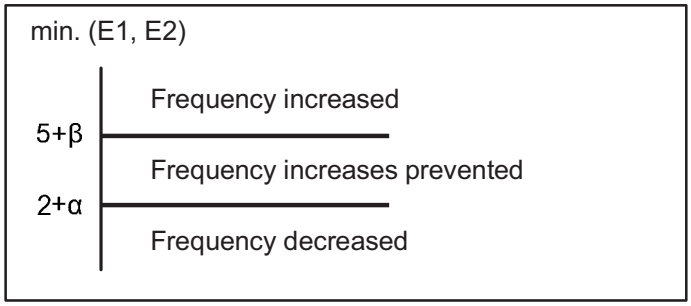

Outdoor EEPROM : Amendment of α and β values can be made due to 3F or 40.

EEPROM setting in outdoor unit

CODE: 3F (for α setting)

Setting No.	-15	.....	0 *	.....	9
α	-15		0		9

CODE: 40 (for β setting)

Setting No.	-15	.....	0 *	.....	9
β	-15		0		9

* Setting at factory shipment

4

7) Discharge Temperature Control

The following control is performed to prevent the discharge temperature from rising abnormally in order to protect the inverter compressor.
In accordance with the temperature of the discharge sensor TD, such controls are performed as to limiting the increase of inverter frequency, decreasing it or halting operation of the compressor.

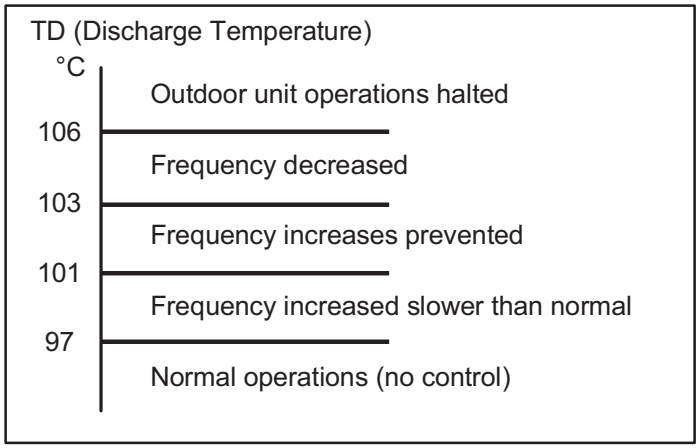

* If the discharge temperature exceeds 106°C, operations of the compressor are halted and restarted after 3 minutes.
If this start/stop activity is repeated 5 times, the alarm "P03" (abnormal discharge temperature) occurs.

8) Defrosting Control

This control function removes frost that has adhered to the outdoor heat exchanger during the heating operation. The control is performed to prevent the deterioration of the heating capabilities attributed to the adherence of frost, and to prevent the crack or crush of pipes attributed to the accretion of ice.
The following control is performed in accordance with the ambient temperature and the outdoor heat exchanger temperature sensor (C1).

Overall Flow Chart of Defrosting Control

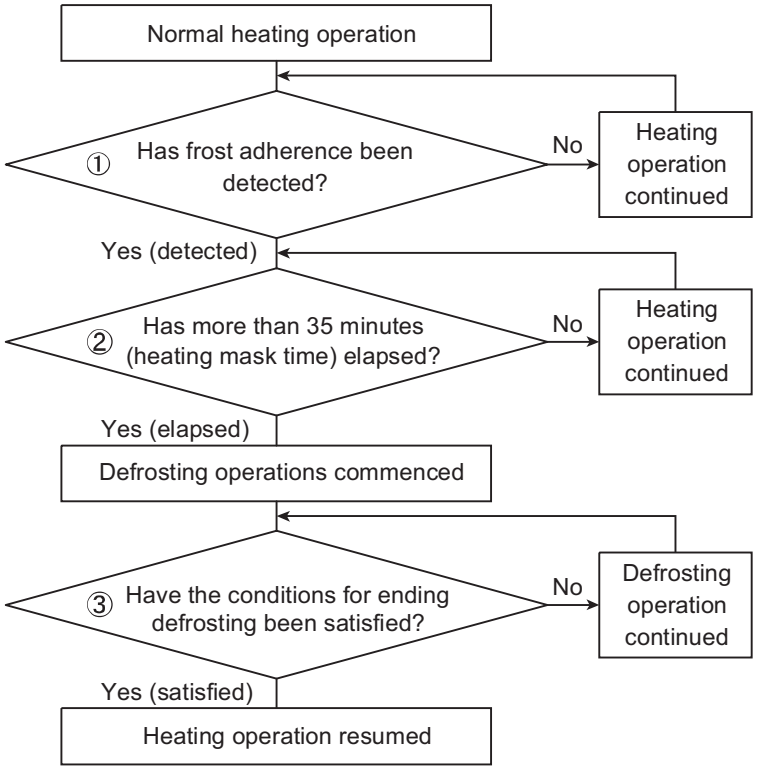

① Frost adherence detection

- If the following conditions are satisfied during heating operations, it is regarded as "frost adherence is detected".
- Frost adherence detection is performed in accordance with the ambient temperature (TO) and the outdoor heat exchanger temperature sensor (C1).
- Frost adherence detection conditions

(a) Following satisfied condition is detected for accumulation of 60 minutes.
Outdoor heat exchanger temperature sensor (C1) □ L1

(b) Following satisfied condition is detected for consecutive 4 minutes or more, 2 times.
Outdoor heat exchanger temperature sensor (C1) □ L2

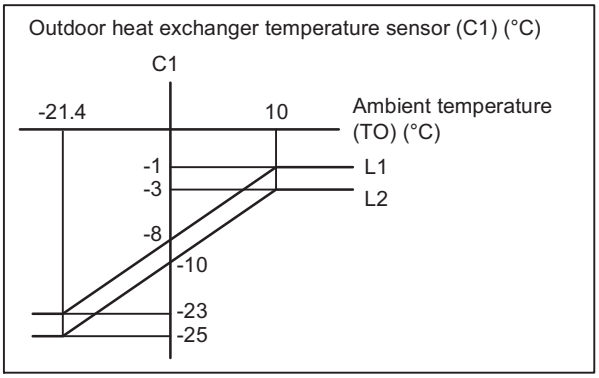

(c) Following satisfied condition is detected for accumulation of over 90 minutes.
Outdoor heat exchanger temperature sensor (C1) □ -3 °C

② Heating Mask Time

This refers to the shortest time that heating operations must be performed without defrosting operations being executed. The mask time for this model is 35 minutes.

* Defrosting operations will not be commenced until the defrosting mask time has elapsed, even if frost adherence has been detected.

③ Ending Defrosting

Defrosting operations are ended when the following conditions are satisfied.

- Ending defrosting conditions
  (a) When the temperature of the outdoor heat exchanger temperature sensor (C1) is 12°C or higher.
  (b) When the temperature of the outdoor heat exchanger temperature sensor (C1) is 10°C or higher for consecutive 60 seconds.
  (c) When a maximum of 15 minutes defrosting time has elaped.

9) Outdoor Unit Fan Control

The appropriate rotations per minute for the outdoor unit fan are determined in accordance with the ambient temperature and the frequency of the compressor inverter.
The outdoor unit fan step is controlled between a range of W1 (Step 1) and WF (Step 15).

10) Outdoor Unit's Electrical Expansion Valve Control

The electrical expansion valve controls the amount of refrigerant that is allowed to flow in accordance with the operation status.
The valve is adjusted in accordance with the discharge temperature (TD), the outdoor heat exchanger temperature sensor (C1), the suction temperature sensor (TS), and the indoor unit's heat exchanger temperature sensors (E1 and E2).

4

(1) Cooling Mode
Controlled so that the suction temperature (TS) - indoor heat exchanger temperature minimum (E1 and E2) is between 0 degree and 2 degrees under normal conditions.
There are cases where the aperture opens wider than normal operation if the discharge temperature increases.

(2) Heating Mode
Controlled so that the suction temperature (TS) - outdoor heat exchanger temperature (C1) is between 0 degree and 2 degrees under normal conditions.
There are cases where the aperture opens wider than normal operation if the discharge temperature increases.

11) Demand Control

There are two styles of demand operations available as methods of restraining power consumption.

(1) Demand via External Input
Demand input from an external source is carried out from the outdoor unit EXCT (CN026) PCB or the outdoor unit's serial/parallel I/O (optional).

- Demand control with EXCT input

Short-circuit		Control (range of operations)
2P and 3P	1P and 3P	
0	0	No ristricted
0	1	Rated current restricted to A□ (A□ = 100□ at factory shipment)
1	0	Rated current restricted to B□ (B□ = 70□ at factory shipment)
1	1	Control OFF

* The operational current is restricted to either A□ or B□ as a general indicator during demand input.
- A□ and B□ can be amended in calibrations of 5□ between 70□ and 100□ with the outdoor unit's maintenance remote controller.
  For details on how to amend the parameters, see the chapter on the outdoor maintenance remote controller, (refer to the section "6-6. Settings Modes : Setting the Outdoor Unit EEPROM").
- A□ value amendments: Parameters are amended with item code "50" (demand 1).
- B□ value amendments: Parameters are amended with item code "51" (demand 2).

(2) Demand Control with No External Input
Demand control is carried out proportionally with the normal settings from the outdoor unit without any external input.
- Amendments can be made in calibrations of 5□ between 0□ and 100□.
  Refer to the section "6-6. Settings Modes : Setting the Outdoor Unit EEPROM" for the outdoor maintenance remote controller for details on how to amend the parameters.
  Parameters are amended with item code "52" (current control level).

4-13. Outdoor Unit Control PCB

4-13-1. Single-Phase Unit

■ CR-PCB

CR-50PE1E5:Up side (U-50PE1E5)

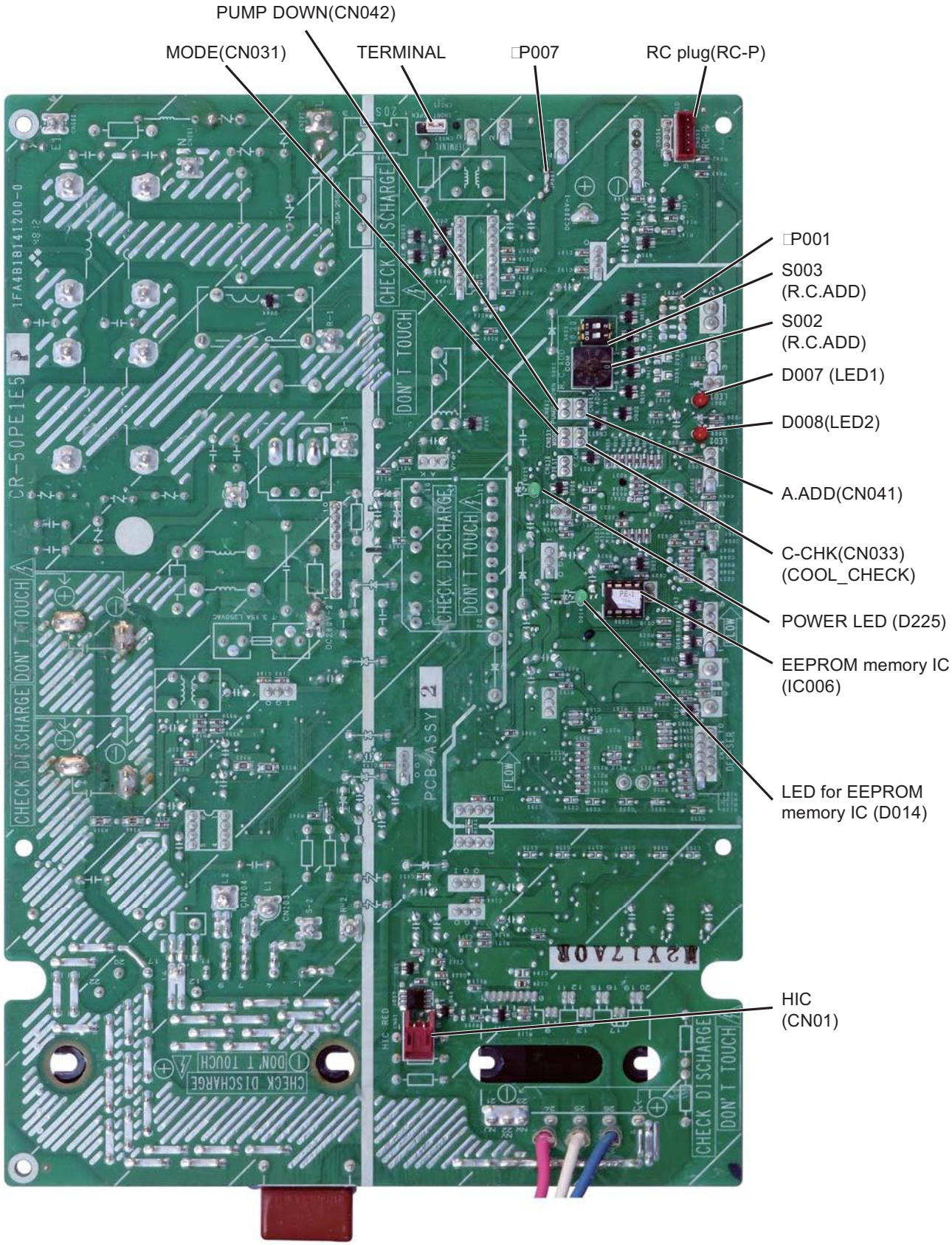

4

■ CR-PCB
CR-50PE1E5:Bottom side (U-50PE1E5)

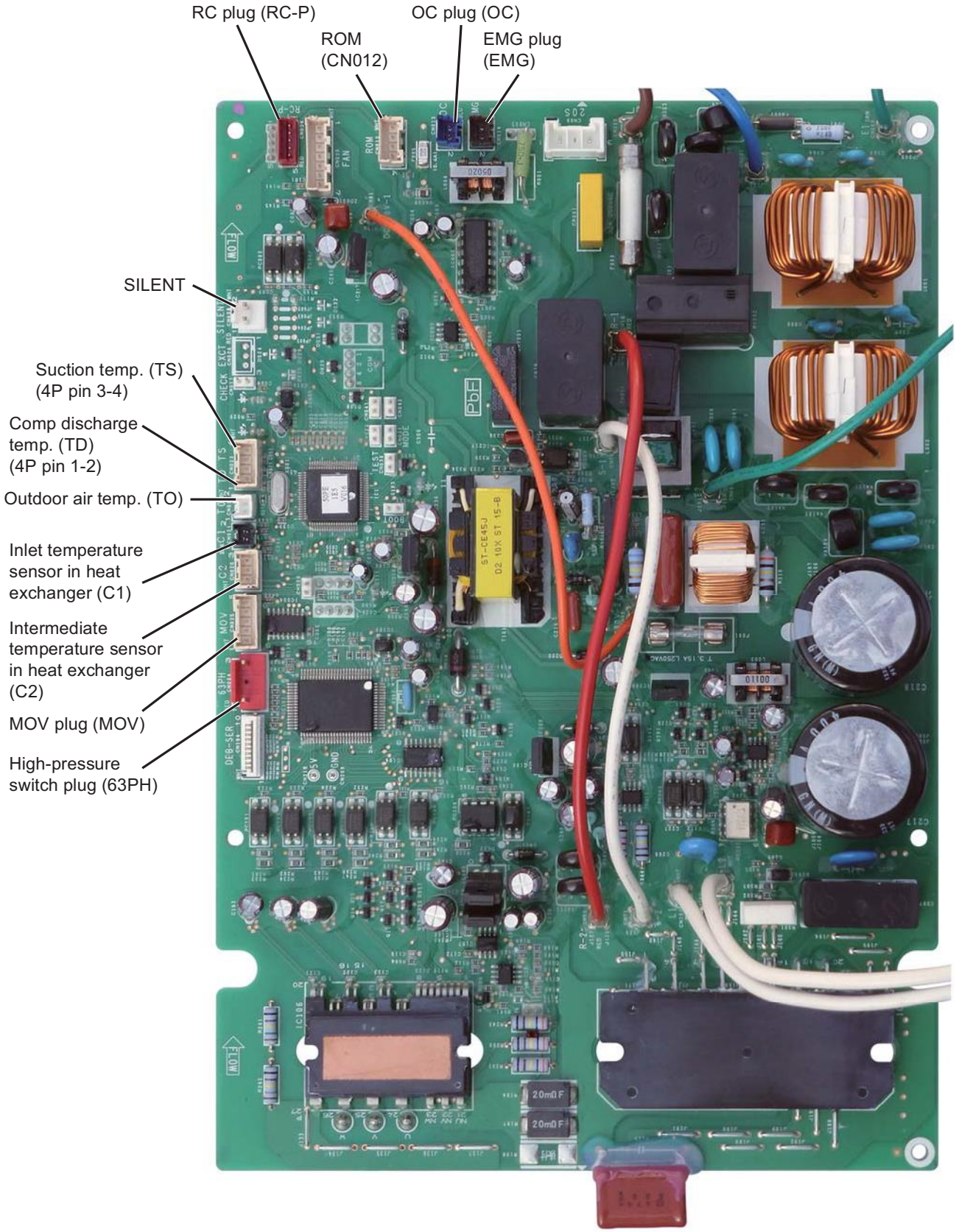

■ CR-PCB
CR-60PEY1E5:Up side (U-60PEY1E5)

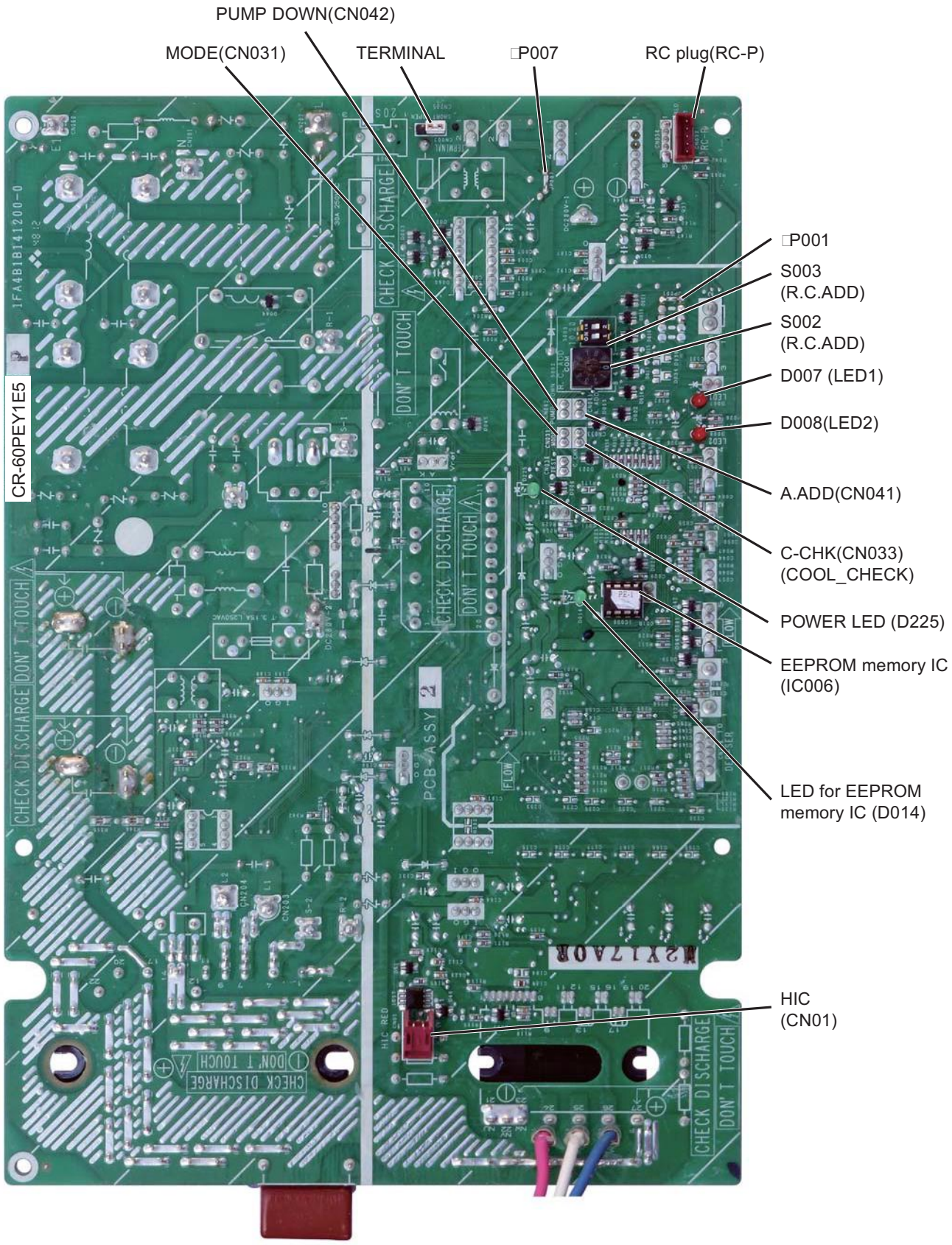

4

■ CR-PCB
CR-60PEY1E5:Bottom side (U-60PEY1E5)

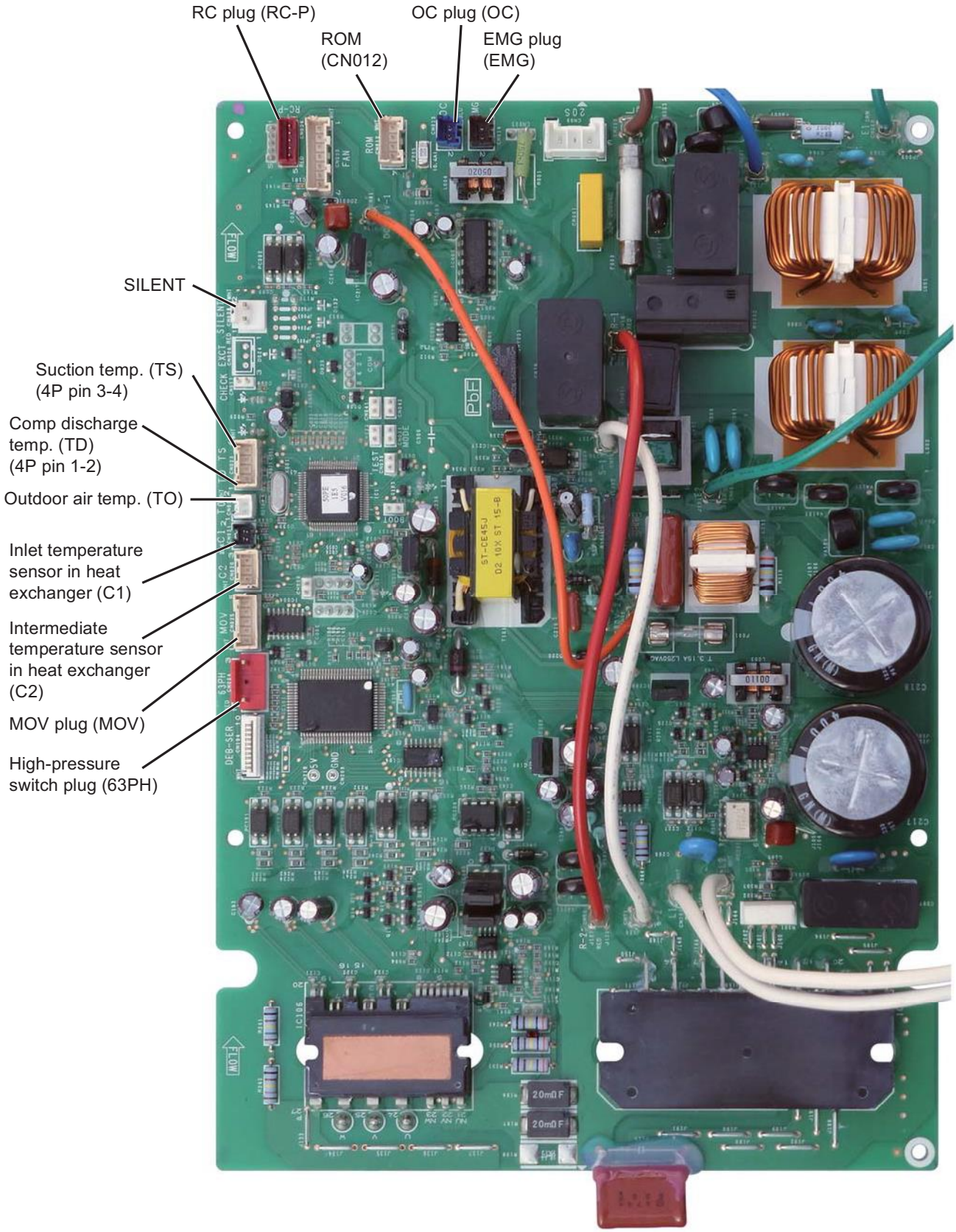

■ CR-PCB
CR-71PEY1E5:Up side (U-71PEY1E5)

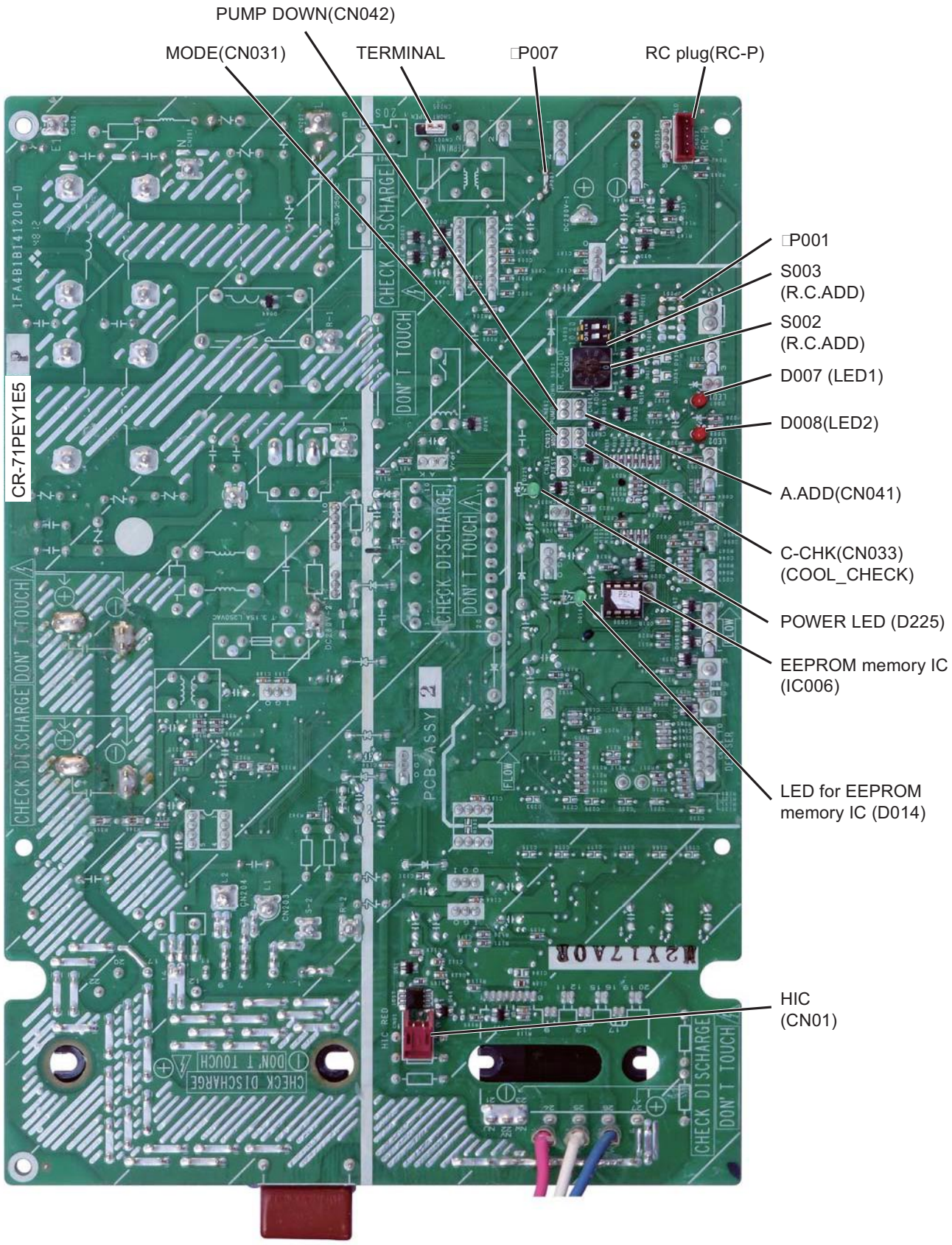

4

■ CR-PCB
CR-71PEY1E5:Bottom side (U-71PEY1E5)

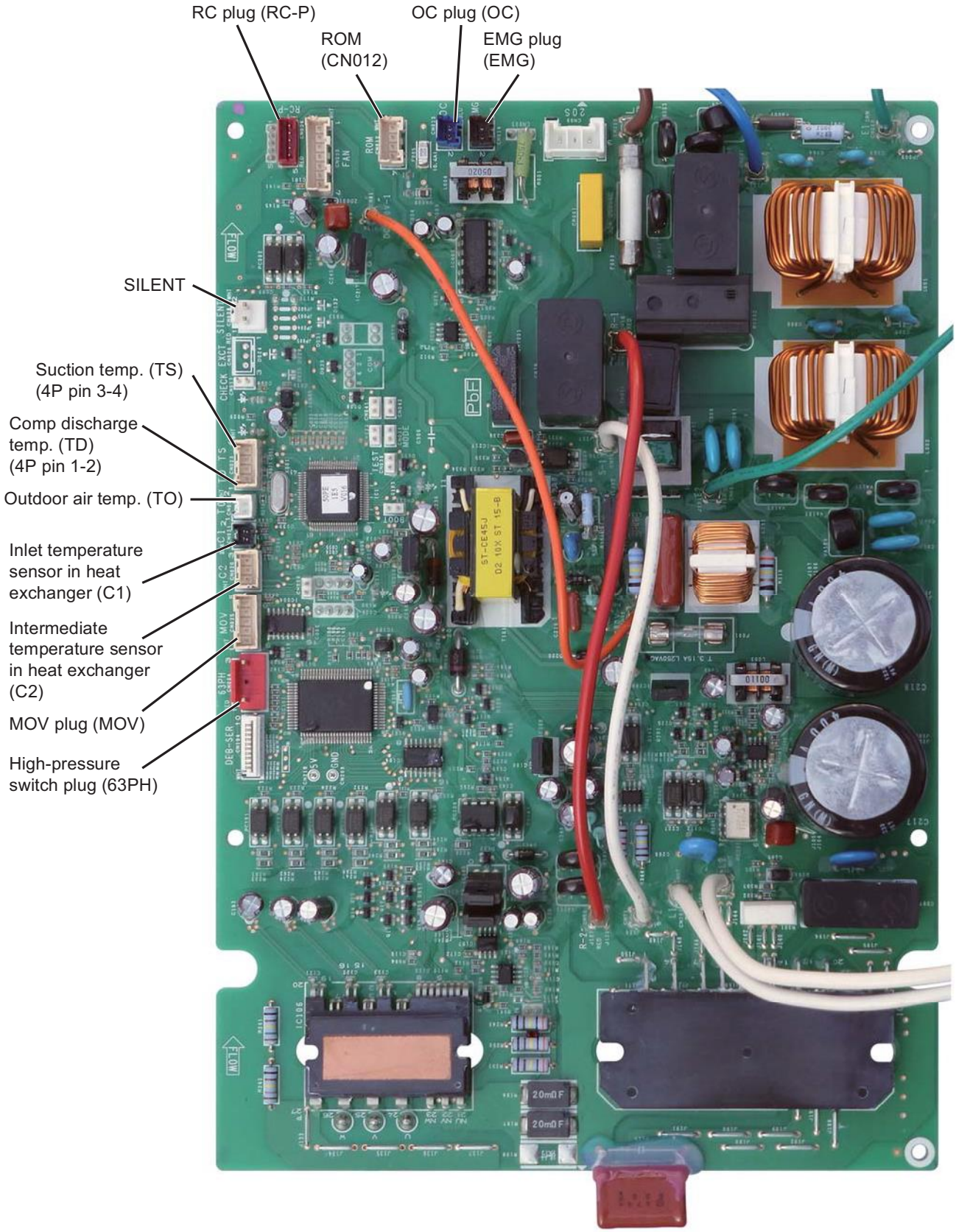

4-13-2. Single-Phase Unit

■ CR-PCB
A747898 (U-60PE1E5A, U-71PE1E5A)

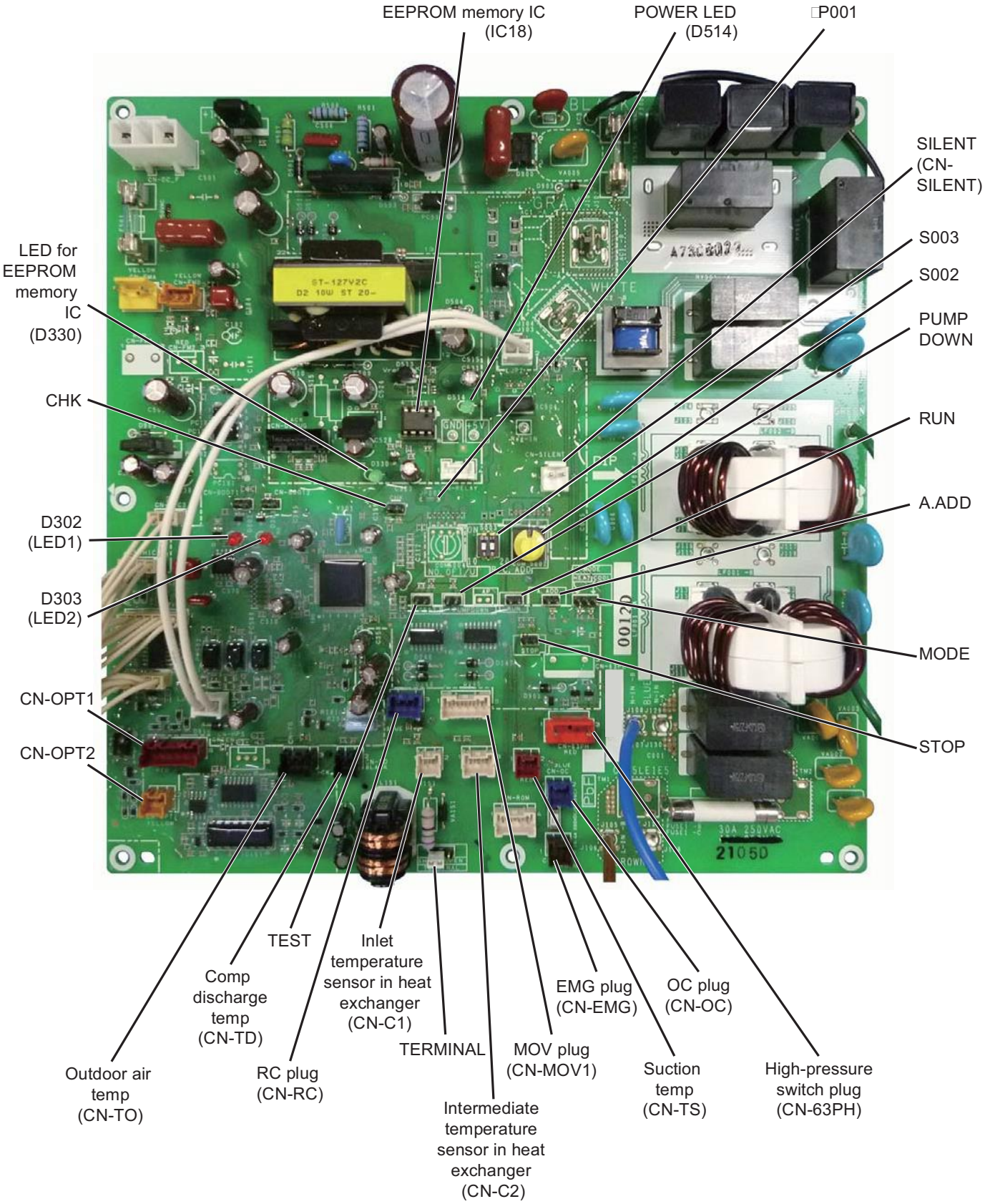

■ CR-PCB
A747895 (U-100PE1E5A)

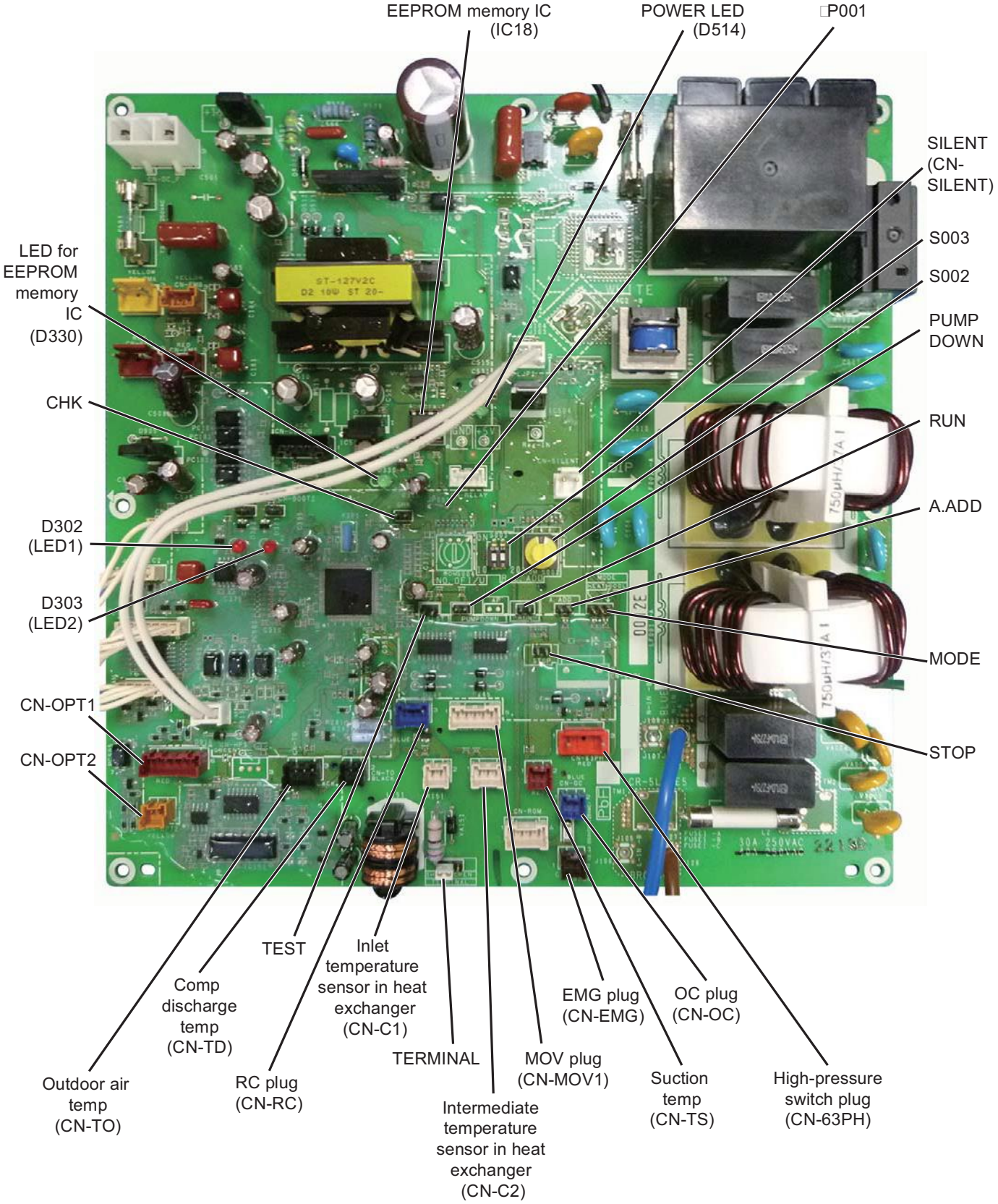

■ CR-PCB
A747896 (U-125PE1E5A, U-140PE1E5A)

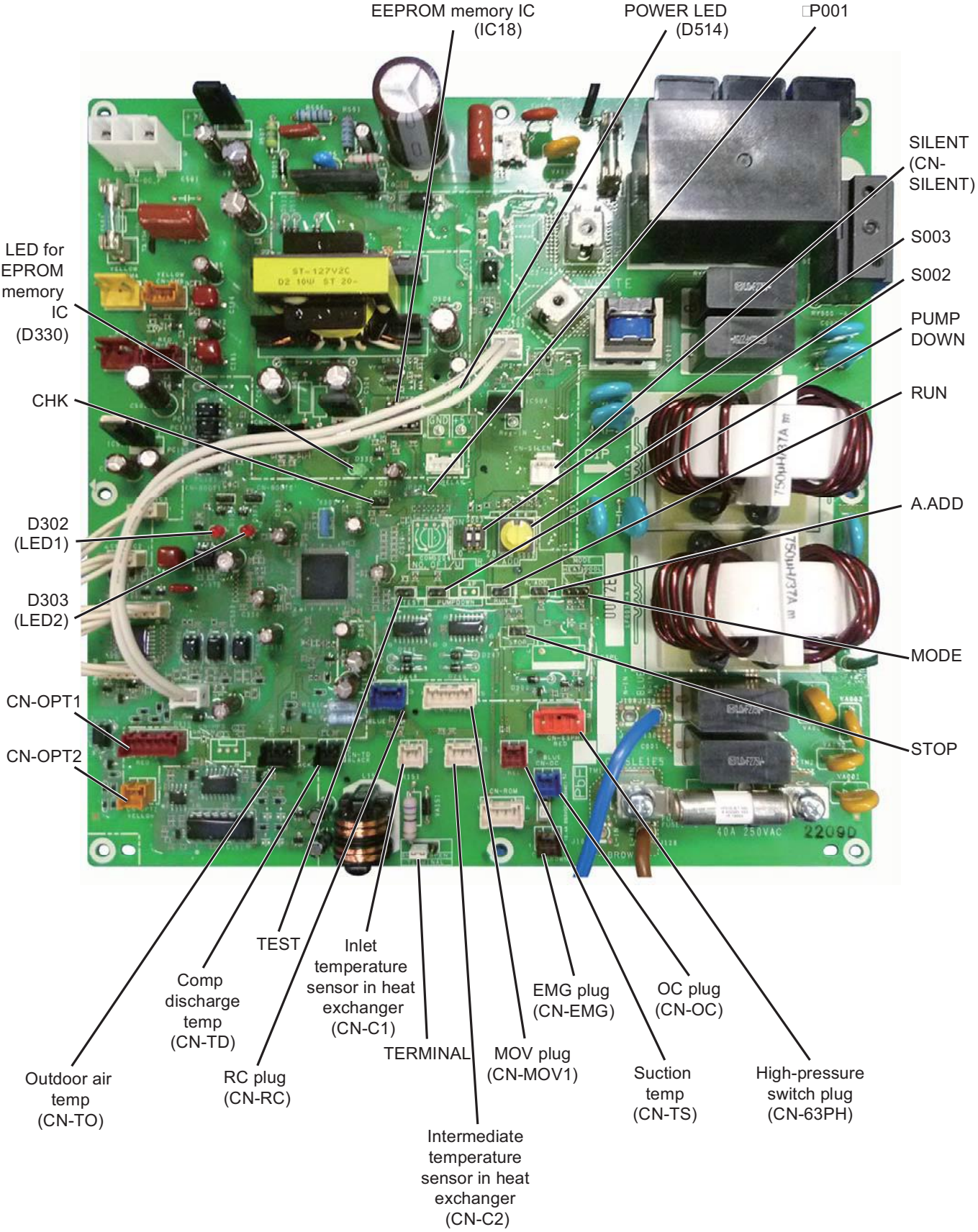

4

■ CR-PCB
A747179 (U-100PEY1E5)

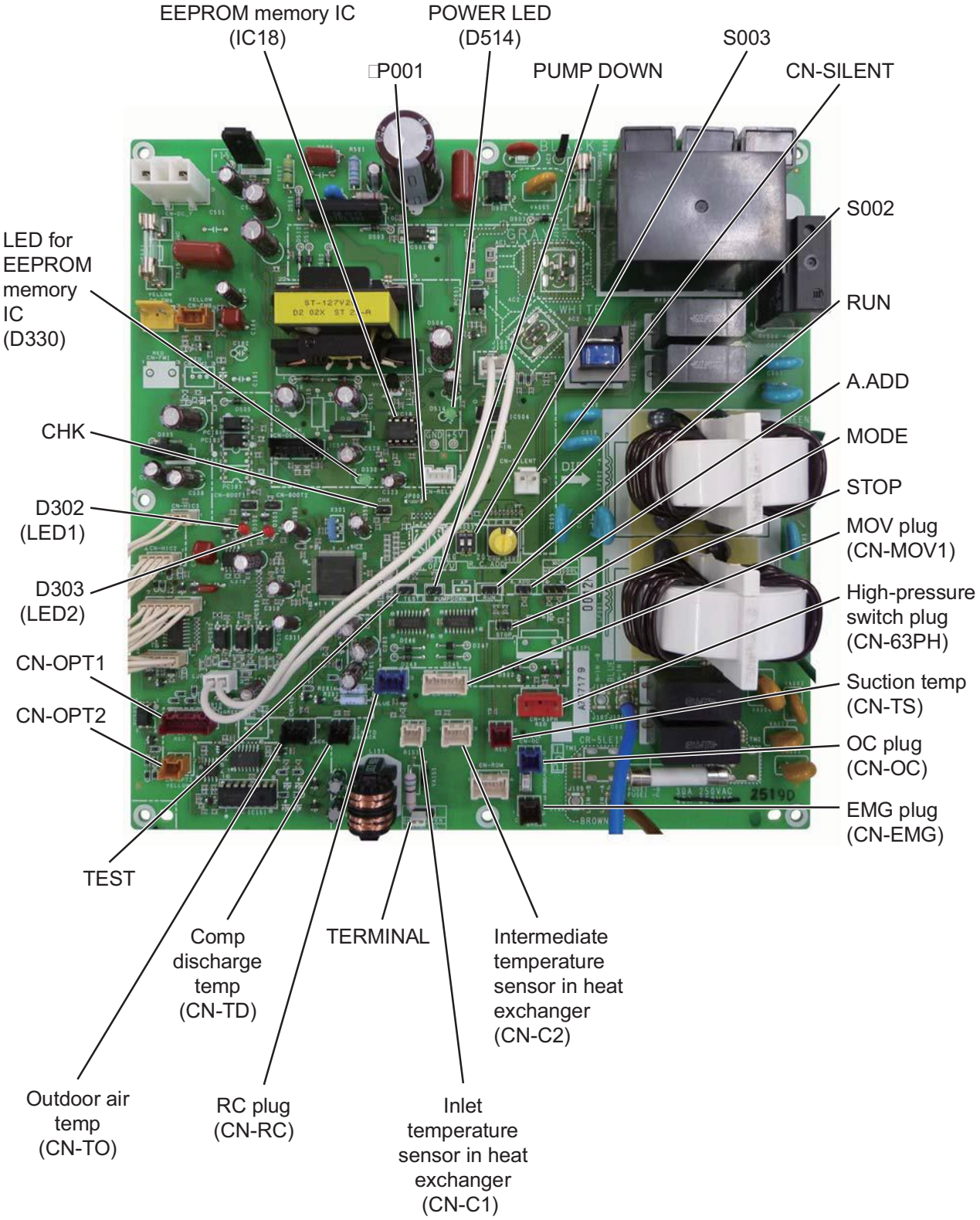

■ CR-PCB
A747180 (U-125PEY1E5)

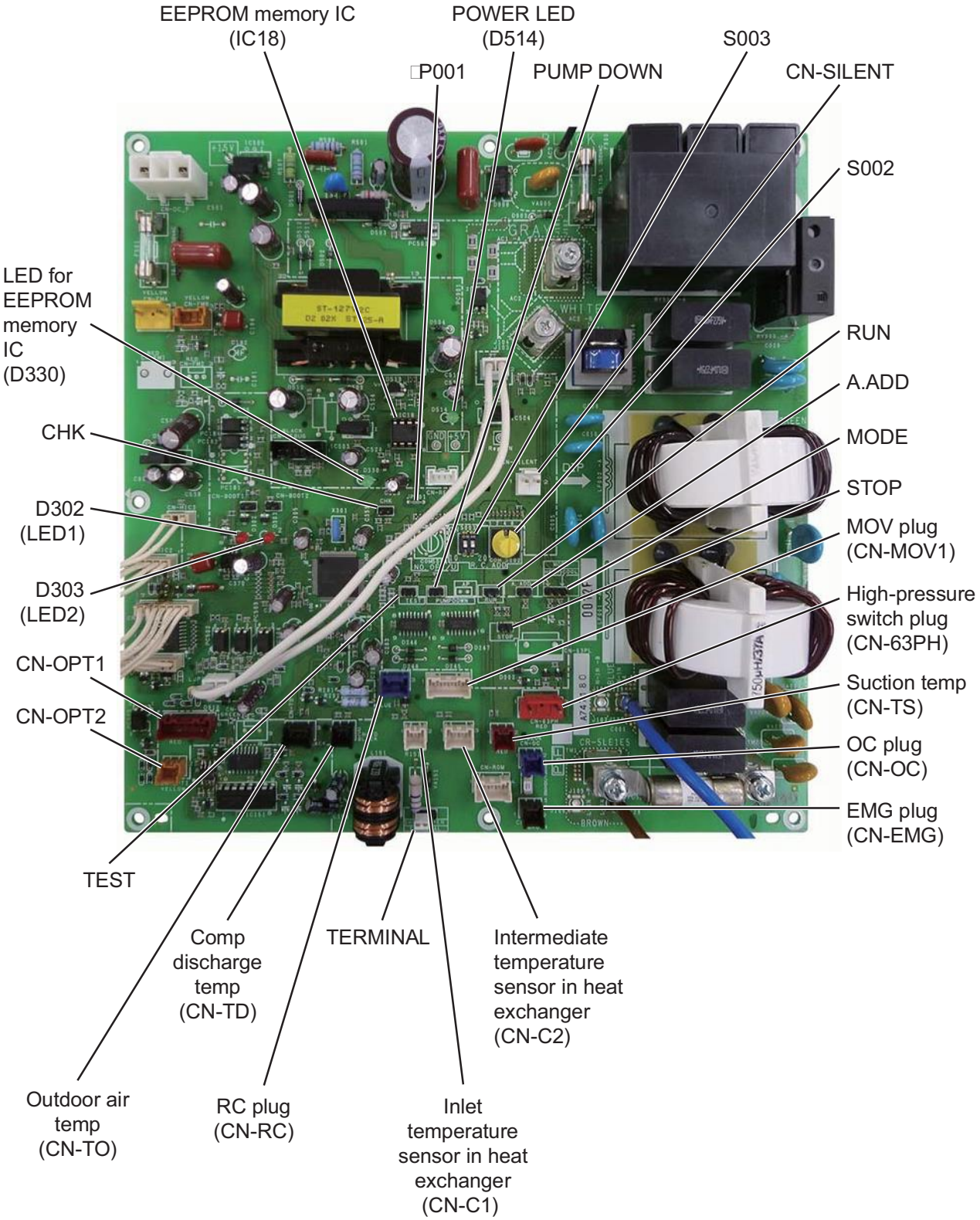

4

■ HIC-PCB
A746895 (U-60PE1E5A, U-71PE1E5A)

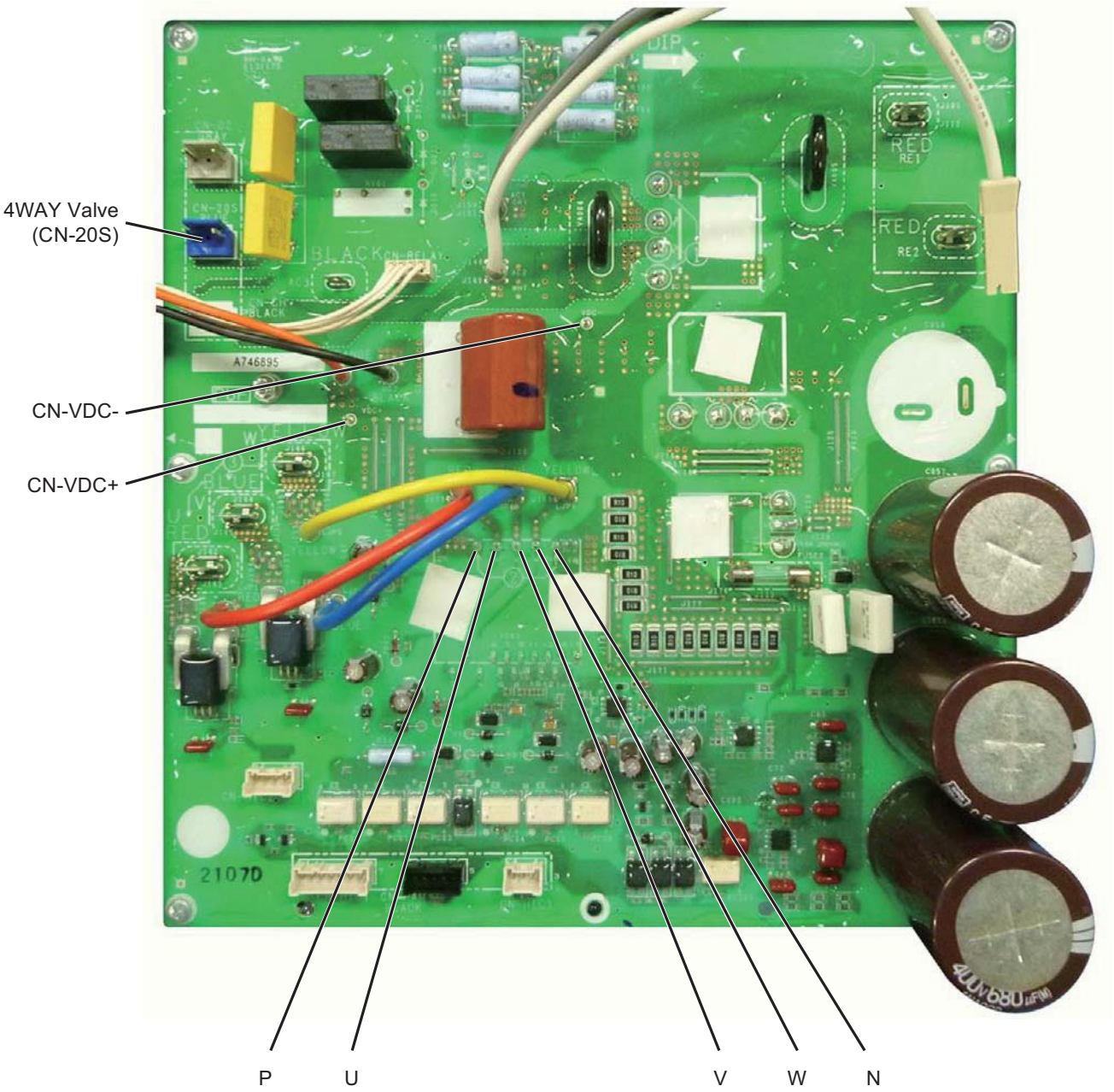

■ HIC-PCB (continued)
A746846 (U-100PE1E5A)

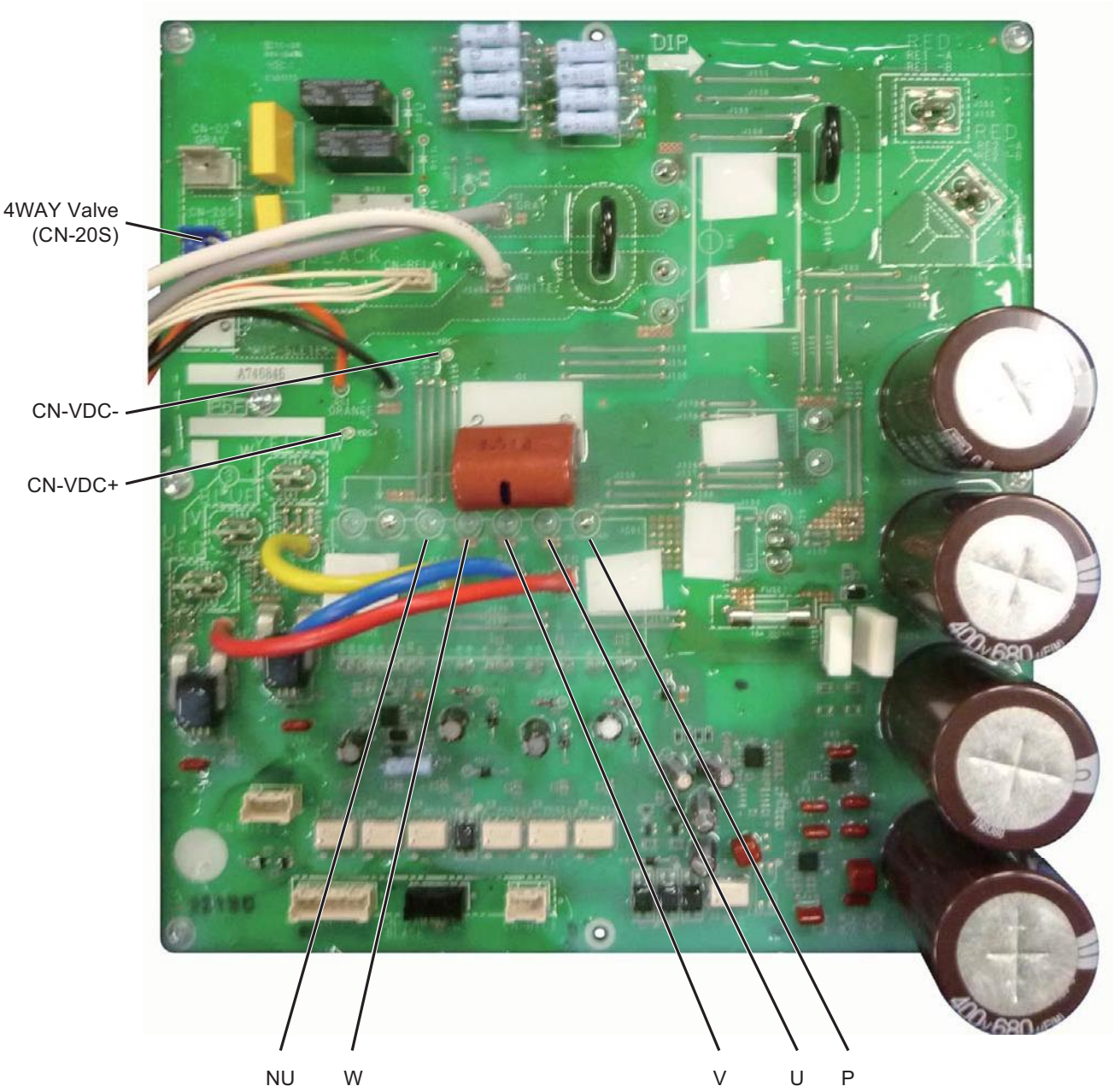

■ HIC-PCB (continued)
A746847 (U-125PE1E5A, U-140PE1E5A)

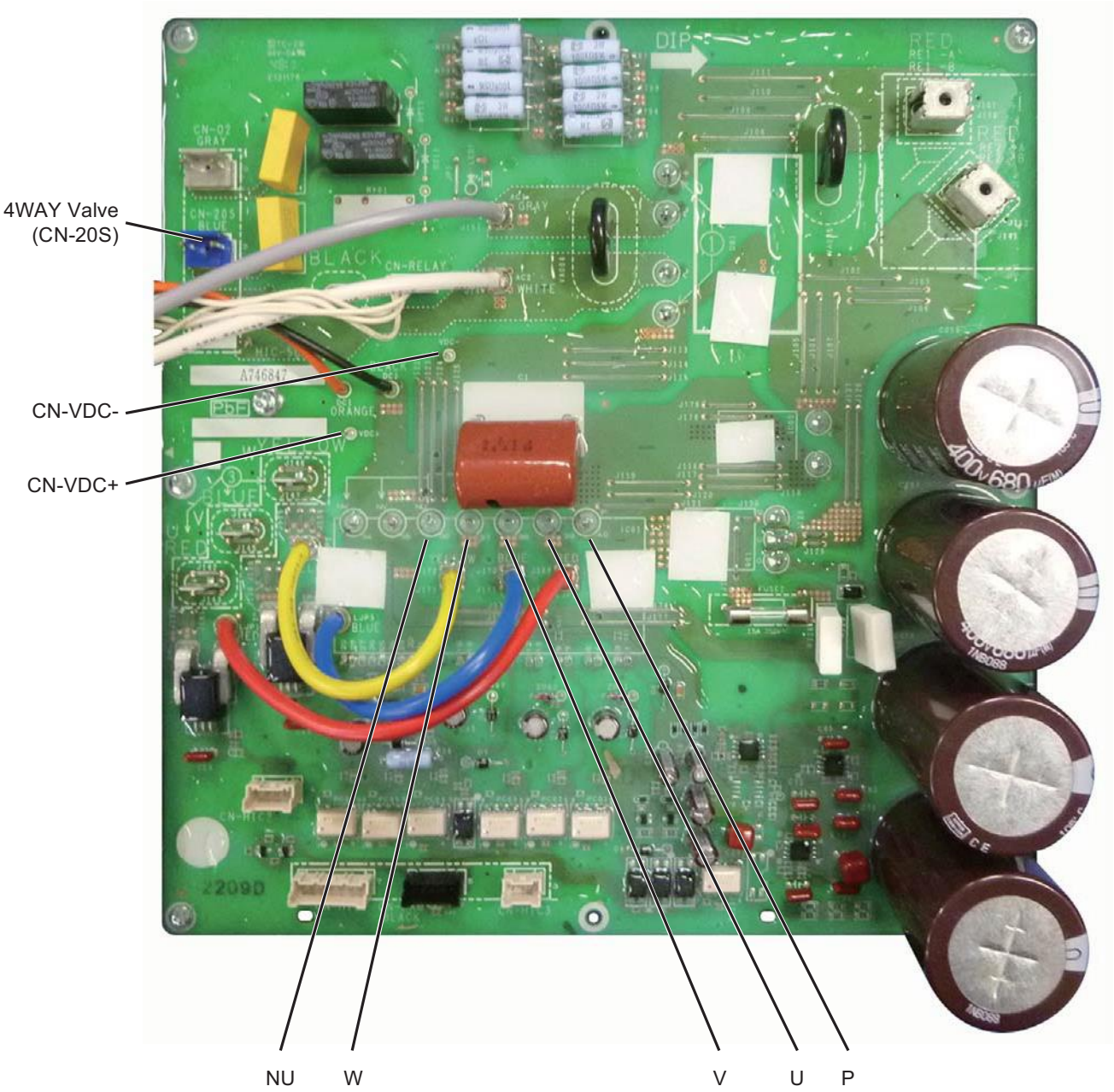

■ HIC-PCB
A746846 (U-100PEY1E5)

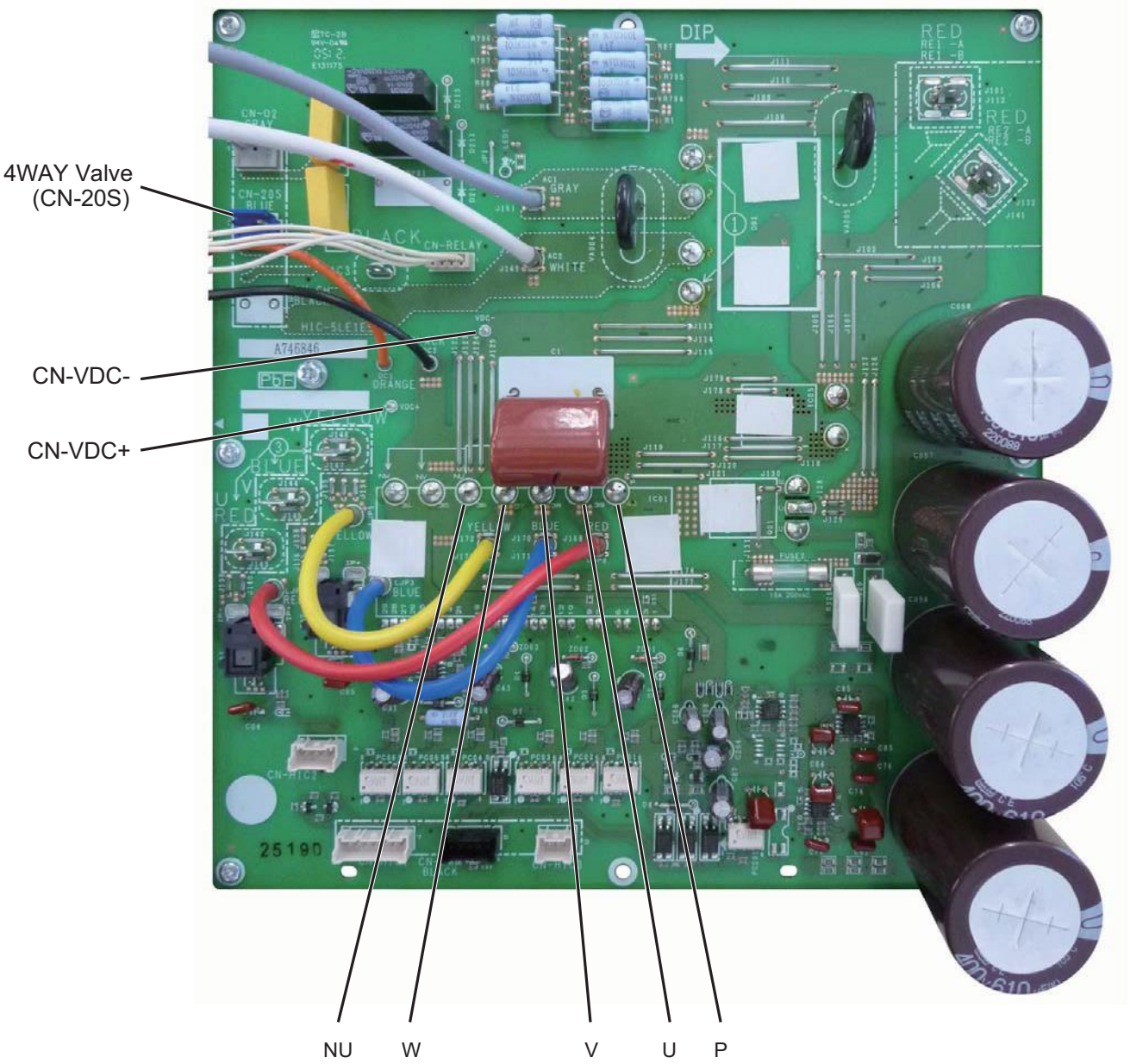

4

■ HIC-PCB (continued)
A746847 (U-125PEY1E5)

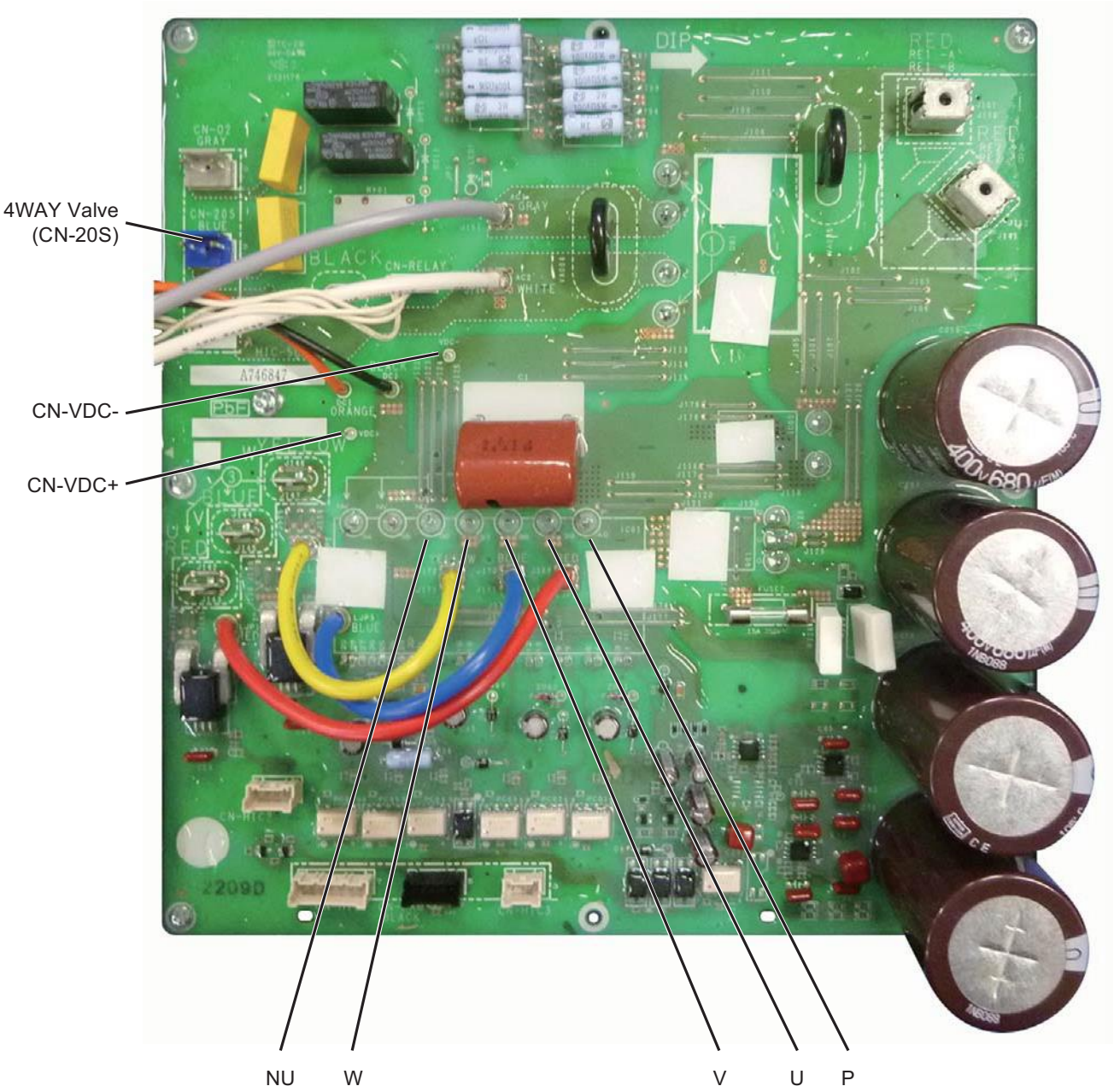

4-13-3. 3-Phase Unit

■ CR-PCB
A747899 (U-71PE1E8A)
A747897 (U-100PE1E8A, U-125PE1E8A, U-140PE1E8A)
A747596 (U-140PEY1E8)

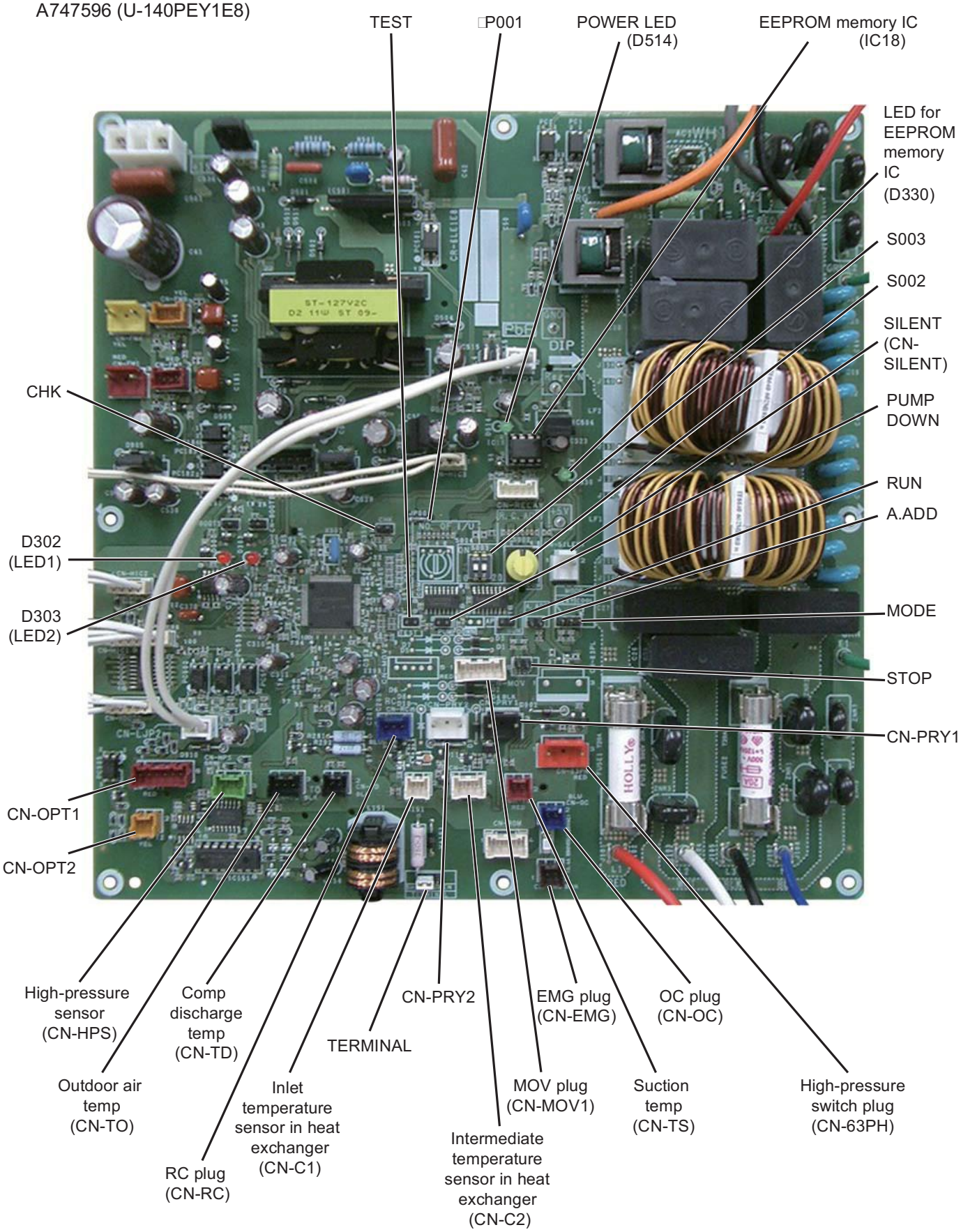

■ CR-PCB
A747247 (U-100PEY1E8, U-125PEY1E8)

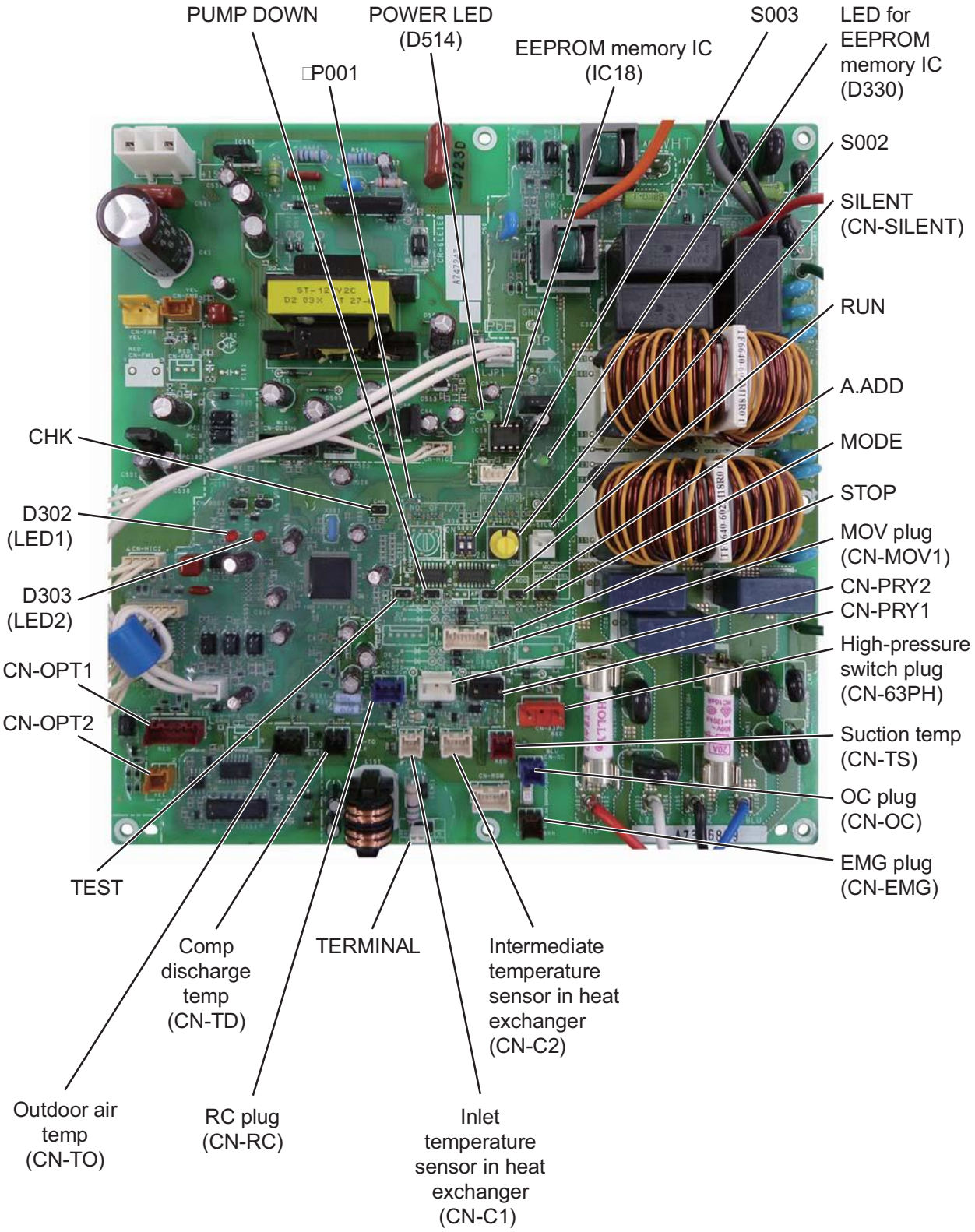

■ HIC-PCB
A746970 (U-71PE1E8A)
A746969 (U-100PE1E8A, U-125PE1E8A, U-140PE1E8A, U-140PEY1E8)

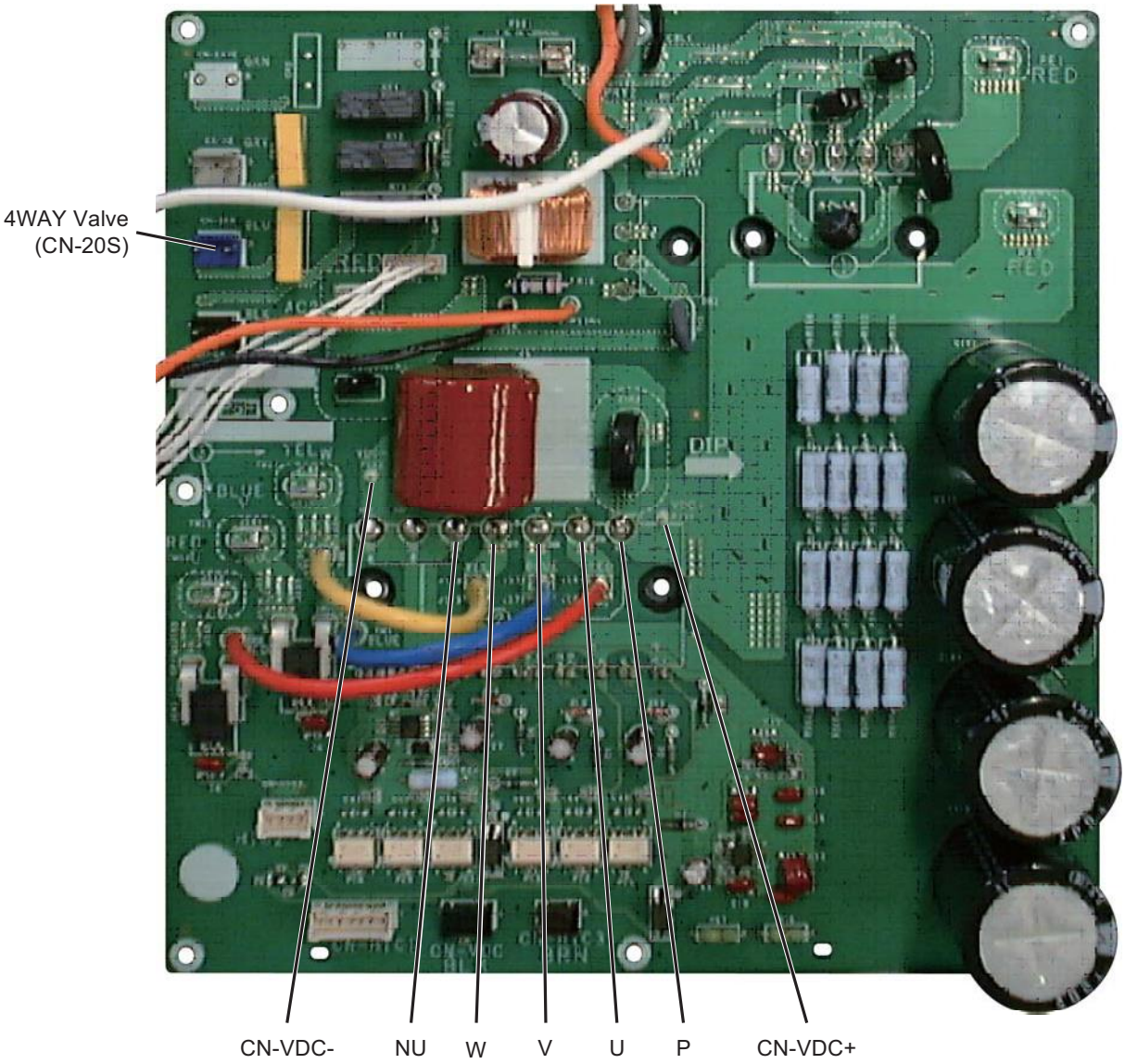

4

■ HIC-PCB
A747248 (U-100PEY1E8, U-125PEY1E8)

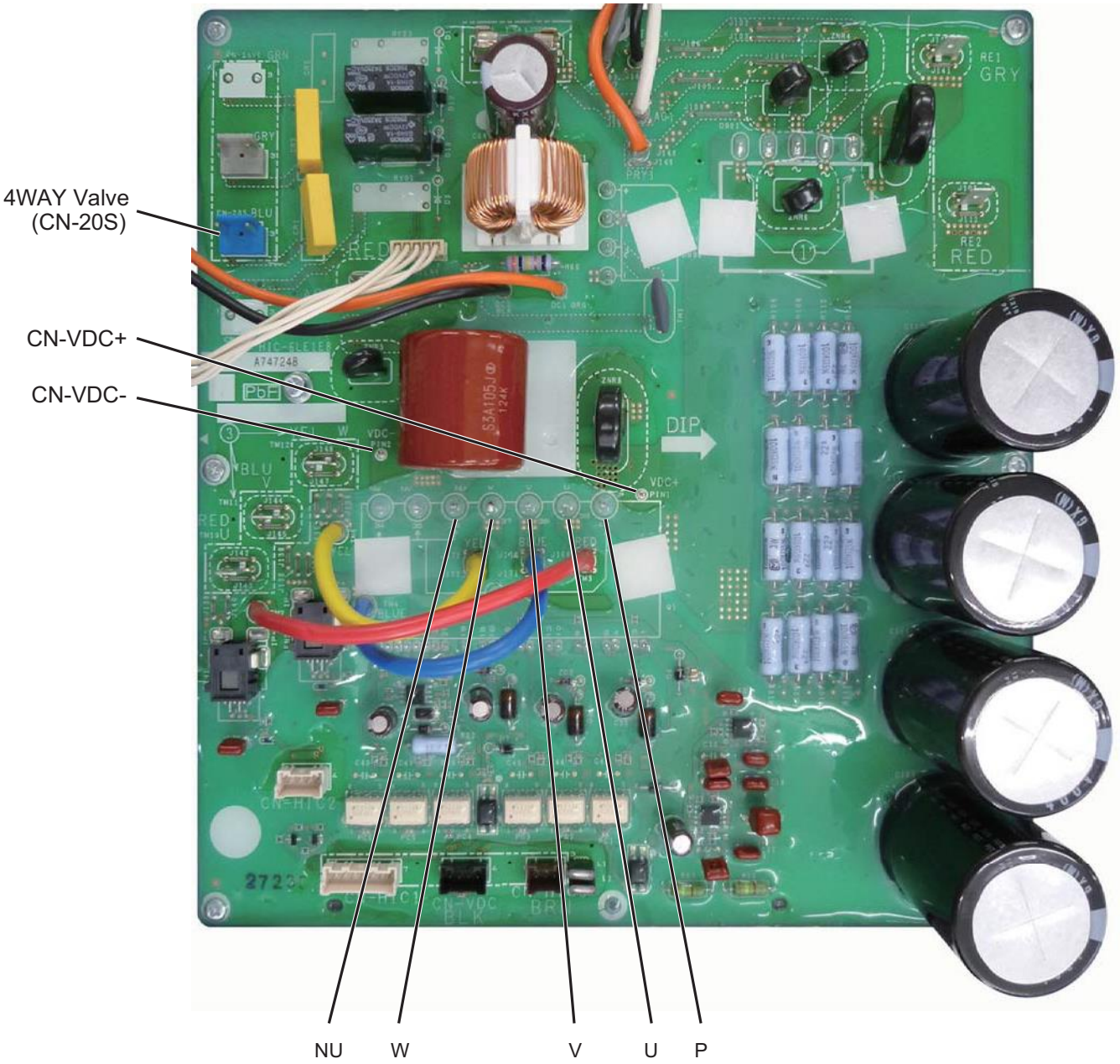

CN-A.ADD	2P plug : Automatic address setting pin • Short-circuit this pin for 1 second or longer to automatically set the addresses at the indoor units that are connected to that outdoor unit and are within the same system. • The system address is “1” at the time of shipment. Automatic address setting is necessary even for communications lines in a single system where the inter-unit control wiring does not cross to any other systems. • While automatic address setting is in progress, the 2 LEDs (LED1, 2: red) on the outdoor unit control PCB blink alternately. (Short-circuiting this pin while automatic address setting is in progress will stop the automatic address setting operation.)
S002	Rotary switch (10 positions, yellow): Outdoor system address setting switch • The setting is “1” at the time of shipment. It is not necessary to change the setting if wiring is connected only to an outdoor unit and indoor units in a single system and the inter-unit control wiring does not cross multiple systems. • If wiring links the inter-unit control wiring for multiple systems to the same communications lines, then a different address must be set for each refrigerant tubing system. • If wiring links multiple systems, a maximum of 30 systems (up to 64 indoor units) can be connected. This setting can be set up to “39,” however control will be for 30 systems even if the setting is set to higher than 30. An alarm will be displayed if system addresses are duplicated. (For details, refer to Table 1.)
S003	DIP switch (2P): Switches for setting system address 10s digit and 20s digit • If 10 systems or more are set, the setting is made by a combination of this DIP switch and S002. • If 10 □19 systems are set, set switch 1 (10s digit) to ON. • If 20 □29 systems are set, set switch 2 (20s digit) to ON, and set switch 1 (10s digit) to OFF. • If 30 systems are set, set both switch 1 (10s digit) and switch 2 (20s digit) to ON. (For details concerning S002 and S003, refer to Table 1.)
□P001	□umper wire
TERMINAL	3P plug : For communications circuit impedance matching • A connecting socket (3P, black) is attached to the terminal plug at the time of shipment from the factory. •In the case of link wiring which combines the inter-unit control wiring for multiple systems into a single communications circuit, leave the connecting socket in place at only one of the outdoor units, and move the socket from the “SHORT” side to the “OPEN” side at all other outdoor units. If multiple connecting sockets are left in place, communications trouble will occur.

LED 1 (D302) LED 2 (D303)	LED (red × 2) • LED 1 and 2 blink alternately while automatic address setting is in progress. • Display the alarm contents for alarms that are detected by the outdoor unit.
Power LED (D330)	LED (green): Power indicator Indicates the DC 5V power on the outdoor unit control PCB.
RUN (CN-RUN)	2P plug (black) : Start pin Short-circuit this pin and apply a pulse signal to start all indoor units in that refrigerant system.
Stop (CN-STOP)	2P plug (black): Stop pin Short-circuit this pin and apply a pulse signal to stop all indoor units in that refrigerant system.
PUMP DOWN (CN-PUMPDOWN)	2P plug (black): Refrigerant recovery Pin • Short circuit this pin to perform refrigerant recovery control using cooling operation. The indoor unit fan will operate at HIGH and 55 Hz for a maximum of 10 minutes. When refrigerant recovery is completed, close the valves and open circuit this pin to stop the operation.
Mode change (CN-MODE)	3P plug (black): Indoor unit Heating/Cooling mode change pin • When operating the compressors to perform automatic address setting, operation in Heating mode can be normally used. However, short-circuiting this pin performs operation in Cooling mode. (Static signal) • Short-circuiting this pin during ordinary operation changes the mode from Cooling to Heating (if the current mode is Cooling) or from Heating to Cooling (if the current mode is Heating).
Test (CN-TEST)	2P plug (black) • This pin is used to test the PCB at the factory. • When the power is turned ON after this pin has been short-circuited, all output signals will be output in sequence. (Sequential output does not occur if this pin is short-circuited when the power is already ON.) Releasing this pin returns the unit to normal control.
CHK (CN-CHK)	2P plug (black) Short-circuit during the test run operation. Open the circuit after the test run.

Table 1. Setting the System Address [S002: Rotary switch (yellow), S003: 2P DIP (black)]

	Outdoor system address No.	S002 setting (system address switch)	S003 setting	
			1P (10s digit)	2P (20s digit)
1 refrigerant system only	1	0	OFF	OFF
Link wiring	1	1	OFF	OFF
	2	2	OFF	OFF
	3	3	OFF	OFF
	4	4	OFF	OFF
	5	5	OFF	OFF
	6	6	OFF	OFF
	7	7	OFF	OFF
	8	8	OFF	OFF
	9	9	OFF	OFF
	10	0	ON	OFF
	11	1	ON	OFF
	12	2	ON	OFF
	13	3	ON	OFF
	14	4	ON	OFF
	15	5	ON	OFF
	16	6	ON	OFF
	17	7	ON	OFF
	18	8	ON	OFF
	19	9	ON	OFF
	20	0	OFF	ON
	21	1	OFF	ON
	22	2	OFF	ON
	23	3	OFF	ON
	24	4	OFF	ON
	25	5	OFF	ON
	26	6	OFF	ON
	27	7	OFF	ON
	28	8	OFF	ON
	29	9	OFF	ON
	30	0	ON	ON

• Causes and corrections in instances when automatic address setting cannot be started.

Trouble	Cause and correction
The power LED on the outdoor unit control PCB does not turn ON.	Check for any errors in the power wiring to the outdoor unit, and check for a missing phase.
LED 1 and 2 on the outdoor unit control PCB do not turn OFF when the outdoor unit power is turned ON, and automatic address setting cannot be started.	Check the "Alarm Displays" table and correct the problem.
An alarm appears immediately when automatic address setting is started from the remote controller.	
Nothing happens when the operator attempts to start automatic address setting from the remote controller.	Check that the remote controller wiring and the inter-unit control wiring are connected correctly. Check that the indoor unit power is ON.

• Causes and corrections in instances when automatic address setting starts, but cannot be completed successfully.

Trouble	Cause and correction
An alarm appears on the remote controller sometime from several seconds to several minutes after automatic address setting is started.	Check the "Alarm Displays" table and correct the problem.
LED 1 and 2 on the outdoor unit control PCB indicate that automatic address setting is in progress (the LEDs blink alternately) for several minutes after automatic address setting is started (the compressors may also start and stop several times), however LED 1 and 2 never indicate that automatic address setting is completed (turn OFF).	Check the alarm details on the "Outdoor Unit Control PCB LED 1 and 2 Alarms" table, then check the "Alarm Displays" table and correct the problem.

• If alarm E15, E16, or E20 appears after automatic address setting is started, check the following items.

Alarm display	Alarm description
E15	The total capacity of indoor units is too lower than that of outdoor unit.
E16	The total capacity of indoor units is too higher than that of outdoor unit.
E20	The outdoor unit received no serial signals from indoor units within 90 seconds after automatic address setting was started.

Check items	E15	E16	E20
Check that the indoor unit power is turned ON.	○		○
Check that the inter-unit control wiring is connected correctly. (Check that there are no open circuits, short circuits, terminal plugs, incorrect wiring to the remote controller terminals, or similar problems.)	○	○	○
Check that the remote controller wiring is connected correctly. (Check that there are no open circuits, short circuits, incorrect wiring to the inter-unit control wiring terminals, control wiring for group control, or similar problems.)	○		○
Check that the amount of additional refrigerant charge is correct (if automatic address setting is performed with the compressors ON).	○		
Check that the refrigerant tubing connections are correct (if automatic address setting is performed with the compressors ON).	○	○	
Check that there are no problems with indoor unit sensors E1 and E3 (if automatic address setting is performed with the compressors ON).	○		
Check that there are no indoor units where the system address was already incorrectly set by manual or automatic address setting.		○	

- When automatic address setting is started from the outdoor unit control PCB or from the remote controller, SETTING (SETTING) appears on the remote controller at units where the inter-unit control wiring and remote controller wiring are connected correctly. LED 1 and 2 on the outdoor unit control PCB blink alternately.
- In the case of indoor unit group control, if there is a mistake in the remote controller inter-unit control wiring for group control, addresses may not be set even if SETTING (SETTING) appears.
- Even if alarm E15 or E16 appears, addresses are set at those indoor units which could be verified. The set addresses can be checked using the remote controller.

- If one of the below alarms appears when the remote controller is operated after automatic address setting was completed (LED 1 and 2 on the outdoor unit control PCB are turned OFF), follow the instructions in the table below and correct the problem location.

Remote controller display	Cause
Nothing is displayed.	The remote controller is not connected correctly (power trouble). The indoor unit power was cut off after automatic address setting was completed.
E01	The remote controller is not connected correctly (remote controller receiving trouble). The remote controller of an indoor unit where the indoor unit address is not set is inadvertently operated. (Communications with the outdoor unit are not possible.)
E02	The remote controller is not connected correctly (trouble with sending of the signal from the remote controller to the indoor unit).
E09	The indoor unit ceiling panel connector is not connected correctly.

- The outdoor unit maintenance remote controller can be used to check the alarm display.
  The number of times that LED 1 and 2 blink on the outdoor unit control PCB can be used to check the alarm display.
  (Refer to "Checking the LED 1 and 2 Alarm Display on the Outdoor Unit Control PCB.")

Alarm Code	Alarm Meaning
E01	Remote Controller Reception Error
E02	Remote Controller Transmission Error
E03	Error in Indoor Unit Receiving Signal from Remote Controller (central)
E04	Error in Indoor Unit Receiving Signal from the Outdoor Unit
E05	Error in Indoor Unit Transmitting Signal to the Outdoor Unit
E06	Outdoor Unit Failed to Receive Serial Communication Signals from Indoor Unit
E08	Duplicate Indoor Unit Address Settings Error
E09	More Than One Remote Controller Set to Main Error
E12	Automatic Address Setting Start is Prohibited while Auto-address Setting in Progress.
E14	Main Unit duplication in Simultaneous-operation Multi Control (detected outdoor unit)
E15	Automatic Address Alarm (The total capacity of indoor units is too low.)
E16	Automatic Address Alarm (The total capacity of indoor units is too high or the total number of indoor units is too many.)
E18	Faulty Communication in Group Control Wiring
E20	Connection Problem of Indoor/Outdoor Units.
F04	Compressor Discharge Temperature Sensor (TD) Trouble
F06	Inlet Temperature Sensor (C1) in Heat Exchanger Trouble
F07	Intermediate Temperature Sensor (C2) in Heat Exchanger Trouble
F08	Outdoor Air Temperature Sensor (TO) Trouble
F12	Compressor Inlet Suction Temperature Sensor (TS) Trouble
F31	Outdoor Unit Nonvolatile Memory (EEPROM) Trouble
H01	Primary (input) Overcurrent Detected
H02	PAM Trouble
H03	Primary Current CT Sensor (current sensor) Failure
H31	HIC Trouble
L04	Outdoor Unit Address Duplication
L10	Outdoor Unit Capacity not Set or Invalid
L13	Indoor Unit Type Setting Error
L18	4-way Valve Operation Failure
P03	Compressor Discharge Temperature Trouble
P04	High Pressure Trouble
P05	AC Power Supply Trouble
P13	Alarm Valve Open
P14	O_2 Sensor Detect
P15	Insufficient Gas Level Detected
P16	Compressor Overcurrent Trouble
P22	Outdoor Unit Fan Motor Trouble
P29	Lack of INV compressor wiring, INV compressor actuation failure (including locked), DCCT failure
P31	Group Control Error

5. TROUBLE DIAGNOSIS

5-1. Contents of Remote Controller Switch Alarm Display 5-2
5-2. Outdoor Unit Control Panel LED Display 5-4
5-3. PAC System Alarm Codes 5-5
5-4. Inspection of Parts (Outdoor Unit) 5-68
5-5. Symptom: Thermostat in OFF continues or cycles OFF & ON too frequently 5-69
5-6. How to Clean Heat Exchanger 5-70
5-7. How to Replace Fan Motor 5-71

5-1. Contents of Remote Controller Switch Alarm Display

ON: ○ Blinking: ☼ OFF: ●

Possible cause of malfunction			Wired remote control display	Wireless remote controller receiver display: Operation	Timer	Preparing
Serial communication errors Missetting	Failure in receiving serial signal from remote controller's indoor unit	Faulty remote controller	E01	Operating lamp blinking ☼	●	●
		Disconnection/Contact failure of remote controller wiring				
		CHK(check) pins on the indoor unit control PCB are short circuited				
	Settings of system address, indoor unit address and group control are not made	In the case of non-group control: • Power supply OFF of outdoor unit • Disconnection / Contact failure of inter-unit wiring In the case of group control: Automatic address operation was not carried out.				
	Setting failure of nonvolatile memory IC	Faulty setting of EEPROM (IC010) on indoor unit				
	Failure in indoor unit serial signal from remote controller	Faulty remote controller	E02			
		Wrong wiring of remote controller				
	Error in indoor unit receiving signal from remote controller (central)		E03			
	Failure in indoor unit receiving serial signal from outdoor unit	Disconnection / Contact failure of inter-unit wiring	E04	Heating ready lamp blinking ●	●	☼
		• Faulty indoor unit control PCB • Faulty outdoor unit control PCB • Communication circuit fuse (F302) on indoor unit control PCB opened				
		• Fuse on outdoor unit control PCB opened Since failure of an outdoor fan motor is considered as a cause, both outdoor unit control PCB and outdoor unit fan motor are exchanged simultaneously.				
	Failure in outdoor unit receiving serial signal from indoor unit	• Disconnection / Contact failure of inter-unit wiring	E06			
		• Disconnection of inter-unit wiring • Communication circuit fuse (F302) on indoor unit control PCB opened				
		Indoor unit control PCB address setting error				
	Duplication of indoor unit address	Duplication of indoor unit address setting	E08	Operating lamp blinking ☼	●	●
	Duplication of main remote controller setting	Error because of more than one remote controller setting to main	E09			
	Improper setting	Automatic address setting start is prohibited	E12			
		Duplication of main unit in group control	E14			
	Communication error between main and sub indoor units	• Disconnection of wiring between main unit and additional units • Contact failure of wiring • Faulty indoor unit control PCB (Main or Addition)	E18			
	Automatic address settings failure	Automatic Address Alarm The total capacity of indoor units is too low	E15	Heating ready lamp blinking ●	●	☼
		Automatic Address Alarm The total capacity of indoor units is too high	E16			
		Automatic Address Alarm No indoor unit connected	E20			
	Outdoor unit Communication error		E24			
	Outdoor unit Communication error		E29			
	Indoor & outdoor unit type miss-matched	Setting error, indoor/outdoor unit type/model miss-matched	L02	Operating and heating ready lamps blinking simultaneously ☼	●	☼
	Duplication of group control's main indoor unit	Duplication of main indoor unit address in group control	L03			
	Group control wiring is connected to individual control indoor unit	Group control wiring is connected to individual control indoor unit	L07			
	Indoor unit address is not set		L08			
	Indoor unit capacity is not set		L09			
	Duplication of outdoor unit address		L04	Operating and heating ready lamps blinking simultaneously ☼	○	☼
	Outdoor unit capacity is not set or setting error		L10			
	Indoor unit type setting error		L13			
	4-way valve locked trouble / operation failure		L18			

Continued

ON: ○ Blinking: ☼ OFF: ●

Possible cause of malfunction			Wired remote control display	Wireless remote controller receiver display		
				Operation	Timer	Preparing
Activation of protective device	Faulty wiring connections of (ceiling) indoor unit panel		P09	Timer and heat ready lamp blinking altemately ●	☼	☼
	Indoor unit fan motor trouoble	Indoor unit fan motor locked	P01			
		Indoor unit fan motor layer short				
		Contact failure in thermostat protector circuit				
	Contact failure of float switch wiring	Faulty drain pump	P10			
		Drainage failure				
		Contact failure of float switch wiring				
	Faulty drain pump	Faulty drain pump	P11			
		Drain pump locked				
	Indoor unit fan motor trouble	Indoor unit fan motor locked Faulty wiring connections of indoor unit fan motor	P12			
	Valve error	Valve error	P13			
	O2 sensor error	O_2 sensor detected	P14			
	Discharge temperature protective alarm	Compressor discharge temperature trouble	P03	Operating and heating ready lamp blinking altemately ☼	●	☼
	Activation of high pressure switch	Compressor discharge pressure trouble	P04			
	Power supply failure	Open phase detected AC power supply trouble	P05			
	Insufficient gas	Insufficient gas level detected	P15			
	Compressor overcurrent trouble		P16			
	Fan motor locked/reversed airflow detected	Outdoor unit fan motor trouble Outdoor unit fan trouble	P22			
	Inverter compressor trouble		P29			
	Group control trouble	Indoor unit in group control trouble	P31			
	Activation of current control compressor's protective device	Primary (input) overcurrent detected	H01	Timer lamp blinking ●	☼	●
	PAM trouble (overcurrent/over-voltage), Activation of compressor's protective device	PAM trouble	H02			
	Primary current undetected	Primary current CT sensor failure	H03			
	HIC trouble	HIC trouble DC voltage not detected	H31			
Thermistor fault	Indoor unit thermistor open/short	Indoor heat exchanger temperature sensor (E1) trouble	F01	Operating and timer lamp blinking alternately ☼	☼	●
		Indoor heat exchanger temperature sensor (E2) trouble	F02			
		Indoor air temperature sensor (TA) trouble	F10			
	Outdoor unit thermistor open/short	Compressor discharge temperature sensor (TD) trouble	F04	Operating and timer lamp blinking alternately ☼	☼	○
		Outdoor heat exchanger temperature sensor (C1) trouble	F06			
		Outdoor heat exchanger temperature sensor (C2) trouble	F07			
		Outdoor air temperature sensor (TO) trouble	F08			
		Compressor suction temperature sensor (TS) trouble	F12			
Monvolatile memory failure		Indoor unit EEPROM trouble	F29	Operating and timer lamp blinking simultaneously ☼	☼	●
		Outdoor unit EEPROM trouble	F31	Operating and timer lamp blinking simultaneously ☼	☼	○

5

5-2. Outdoor Unit Control Panel LED Display

(○ : ON ☼ : Blinking ● : OFF)

LED1 D302	LED2 D303	Display meaning
○	○	After the power is turned ON (and automatic address setting is not in progress), no communication with the indoor units in that system is possible.
(Both ON)		
●	○	After power is turned ON (and automatic address setting is not in progress), 1 or more indoor units are confirmed in that system; however, the number of indoor units does not match the number that was set.
(OFF)	(ON)	
●	●	Automatic address setting was completed successfully. (After the power is turned ON, the number of detected indoor units connected to that system matches the number that was set, and regular communications are occurring.)
(Both OFF)		
☼	☼	Automatic address setting is in progress.
(Blinking alternately)		
☼	☼	Alarm display LED 1 blinks M times, then LED 2 blinks N times. The cycle then repeats. M = 2: P alarm 3: H alarm 4: E alarm 5: F alarm 6: L alarm N = Alarm No. Example: LED 1 blinks 2 times, then LED 2 blinks 16 times. The cycle then repeats. Alarm is “P16.”
(Blinking alternately)		
☼	○	PUMP DOWN is in progress.
LED 1 : Blinking LED 2 : ON		
☼ (0.8 / 0.3) *	●	P04 (High pressure trouble) Pre-trip display
LED 1 : Blinking LED 2 : OFF		
☼ (0.5 / 0.5)	●	Other Pre-trip display
LED 1 : Blinking LED 2 : OFF		

* Blinking (0.8 / 0.3) indicates that the lamp illuminates for 0.8 seconds, and then is OFF 0.3 seconds.

5-3. PAC System Alarm Codes

Alarms for outdoor units

Alarm Code	Alarm Meaning
E01	Remote Controller Reception Error
E02	Remote Controller Transmission Error
E03	Error in Indoor Unit Receiving Signal from Remote Controller (central)
E04	Error in Indoor Unit Receiving Signal from the Outdoor Unit
E05	Error in Indoor Unit Transmitting Signal to the Outdoor Unit
E06	Outdoor Unit Failed to Receive Serial Communication Signals from Indoor Unit
E08	Duplicate Indoor Unit Address Settings Error
E09	More Than One Remote Controller Set to Main Error
E12	Automatic Address Setting Start is Prohibited while Auto-address Setting in Progress.
E14	Main Unit duplication in Simultaneous-operation Multi Control (detected outdoor unit)
E15	Automatic Address Alarm (The total capacity of indoor units is too low.)
E16	Automatic Address Alarm (The total capacity of indoor units is too high or the total number of indoor units is too many.)
E18	Faulty Communication in Group Control Wiring
E20	Connection Problem of Indoor/Outdoor Units.

F04	Compressor Discharge Temperature Sensor (TD) Trouble
F06	Inlet Temperature Sensor (C1) in Heat Exchanger Trouble
F07	Intermediate Temperature Sensor (C2) in Heat Exchanger Trouble
F08	Outdoor Air Temperature Sensor (TO) Trouble
F12	Compressor Inlet Suction Temperature Sensor (TS) Trouble
F31	Outdoor Unit Nonvolatile Memory (EEPROM) Trouble

H01	Primary (input) Overcurrent Detected
H02	PAM Trouble
H03	Primary Current CT Sensor (current sensor) Failure
H31	HIC Trouble

L04	Outdoor Unit Address Duplication
L10	Outdoor Unit Capacity not Set or Invalid
L13	Indoor Unit Type Setting Error
L18	4-way Valve Operation Failure

P03	Compressor Discharge Temperature Trouble
P04	High Pressure Trouble
P05	AC Power Supply Trouble
P13	Alarm Valve Open
P14	O_2 Sensor Detect
P15	Insufficient Gas Level Detected
P16	Compressor Overcurrent Trouble
P22	Outdoor Unit Fan Motor Trouble
P29	Lack of INV compressor wiring, INV compressor actuation failure (including locked), DCCT failure
P31	Group Control Error

Symptoms and Parts to Inspect

Remote controller alarm display	Alarm contents	□udgement conditions	Eliminating condition of alarm	□udgement and correction
P03	Abnormal discharge temperature error • Discharge temp. detected at or above the specified value	Stops when temp. exceeds 106 ℃. Alarm output on 5 pre-trips	Recovery at restart	1. Check refrigerant cycle (gas leak). 2.Trouble with electronic expansion valve 3.Check discharge temperature sensor (TD).
P05	CT disconnected or AC power supply error	The current value transmitted from the microcomputer on the outdoor unit control substrate is low. When no AC power input for more than 30 seconds to 5 minutes : Single alarm	Recovery at restart	1. Check outdoor unit control PCB. 2. Lack of reactor wire
P15	Insufficient gas level detected.	• Discharge temperature is 95 ℃ or higher. • Electronic expansion valve is at Step 480. When the above has continued for 1 minute. Indoor air sucking due to body thermostat max (E1 or E2) - TA □4 ℃	Recovery at restart	1.Check refrigerant cycle (gas leak). 2.Trouble with electronic expansion valve 3.Check outdoor unit valve opening.
L18	4-way valve operation failure • □udged after heating operating for 5 minutes consecutively.	The indoor unit heat exchanger temperature drops even though the compressor is switched on during the heating mode: To +20 ℃ □ C1 Pre-trip 1 time	Recovery at restart	1. Check 4-way valve. 2. Check 4-way valve wiring. 3. Check outdoor unit control PCB.
P04	High-pressure protection error	High pressure switched ON → OFF (Alarm is output when switch opened.) Pre-trip 4 times.	Recovery at restart	Overload operation of refrigerant cycle
P22	Outdoor unit fan motor trouble • Inverter protection circuit was activated, or lock was detected at outdoor unit fan motor.	Inverter stops after alarm is detected. Pre-trip 10 times	Recovery at restart	1.Position detection trouble. 2.Outdoor unit fan motor over-current Protection circuit is activated. • Check outdoor unit control PCB. • Refer to outdoor unit fan judgement methods.
P29	Lack of INV compressor wiring, INV compressor actuation failure, DCCT failure	Inverter stops after alarm is detected. Alarm is output when inverter stops (pre-trip) consecutively 10 times.	Recovery at restart	1.Stops immediately even when operations restarted. • Layer short on the compressor 2.Check HIC circuit. • Wiring trouble
H31	HIC trouble	Pre-trip consecutively 10 times	Temperature dropped	Heat sink and PCB (HIC) • Contact trouble

Check Prior to Auto Address Setting

※ If an outdoor unit displays an alarm, conduct this process after diagnosing the problem.

1 Auto Address	1-1	Is the power of the indoor unit(s) and outdoor unit(s) on?	Yes	2-1
			No	Power on
2 Indoor/ outdoor control line	2-1	Has the wiring of the indoor/outdoor control line been completed? Is it all connected?	Yes	2-2
			No	Connect the wiring
	2-2	Has high voltage (over AC200V) been applied to the control line circuit? Has the fuse on the control PC board blown? (Check each board of the indoor unit(s) and outdoor unit(s).)	Yes	2-3
			No	3-1
	2-3	The power line and indoor/outdoor control line are miswired. Turn off the power, check & correct the miswiring and then make connections of the indoor/outdoor control lines to the emergency side of all the control PC boards and controllers.		
3 Installation or setting related	3-1	Be sure that the indoor and outdoor units are connected with correct combination written in catalog.	Yes	3-2
			No	Correct the connection
	3-2	Is the indoor/outdoor control line connected to more than one outdoor unit? (Network wired?)	Yes	3-3
			No	3-6
	3-3	Is the Terminal resistor select switch on the outdoor control PC board set to just one unit?	Yes	3-4
			No	Correct the setting
	3-4	Are other outdoor units using a duplicate setting?	Yes	3-5
			No	3-6
	3-5	When units are networked, first set the system address for each outdoor unit in the order 1-2-3 and then run auto address setting.		
	3-6	Run the auto address setting.		

E01 Remote Controller Reception Error (When indoor unit(s) are connected)

1. Error Detection Method

It is judged an error if no self-addressed communication is sent to the remote controller in a 3-minute period.

- When a remote controller is set to sub remote controller.
- When there are nine or more indoor units in a remote control group's wiring.
- When the CHK (check pin) and/or TEST (test pin) on the indoor unit control PC board are short circuited.
- The nonvolatile memory (EEPROM) is not installed or faulty when turning on the power.
- Indoor unit control PC board error
- Remote controller check mode
- Malfunctions of the remote controller itself (reception circuit error)

2. Error Diagnosis

1 Auto Address	1-1	Is auto address setting complete?	Yes	1-2
			No	1-3
	1-2	Is there an auto address setting error (Is the outdoor unit showing an alarm)?	Yes	1-3
			No	2-1
	1-3	Conduct checks prior to auto address setting.		
2 Group Control Wiring	2-1	Is that indoor unit under group control?	Yes	2-2
			No	3-1
	2-2	Are there any indoor units with their power off in the remote control group's wiring?	Yes	Power on
			No	2-3
	2-3	Are nine or more indoor units connected in one remote control group's wiring?	Yes	Correct the wiring
			No	2-4
	2-4	Was the remote control group's wiring changed after auto address setting was complete? Alternatively, were group settings changed in the remote control detailed settings mode?	Yes	2-5
			No	3-1
	2-5	No main unit in the remote control group's wiring? Re-execute auto address setting.		
3 Installation or setting related	3-1	Are the CHK pin and TEST pin on the indoor unit control board short-circuited?	Yes	Remove the short
			No	3-2
	3-2	Is the wireless remote controller connected to on the indoor unit's control PC board?	Yes	3-3
			No	3-5
	3-3	Disconnect the connector mentioned above on the PC board of the indoor unit control PC board, and see whether the E01 goes off after several minutes. (When doing so, if two remote controllers are being used and the wireless remote controller is the main remote controller, set the other remote controller as the main.)	Yes	3-4
			No	3-5
	3-4	Replace wireless remote control parts including wiring.		
	3-5	Is the LED blinking on the indoor unit's control PC board?	Yes	3-6
			No	3-7
	3-6	The nonvolatile memory (EEPROM) on the indoor unit's control PC board is either not installed, improperly installed or the nonvolatile memory is faulty. Correct this or after replacing the nonvolatile memory, write model data to it in the remote control detailed settings mode.		
	3-7	Is there a short, miswiring, disconnection, wrong contact or grounding in the remote control's wiring?	Yes	Correct the wiring
			No	Replace the indoor unit's control board.

- Regarding the remote controller check, refer to the Reference Materials.
- For information on the procedures for replacing the nonvolatile memory (EEPROM) of the indoor unit and/or replacing the indoor unit's control board, refer to the manual that is packaged with the indoor unit service board.

A747931 : 4-way Cassette Type Indoor Unit Control Board
Ceiling Type (T2 type) Indoor Unit Control Board

A747938 : Duct Type Indoor Unit Control Board

5

E02 Remote Controller Transmission Error

1. Error Detection Method

When the remote controller itself cannot transmit. Or when it cannot receive the signal it transmitted itself, or when they are different and judged an error.

- Malfunction of the remote controller itself (transmit circuit error)

2. Error Diagnosis

1 Remote Control Group Wiring	1-1	Is the indoor unit under group control?	Yes	1-2
			No	2-1
	1-2	Are the wires 1 (white) & 2 (black) to the remote control group shorted or opened?	Yes	Correct the wiring
			No	2-1
2 Group Control Wiring	2-1	Is the wireless remote controller connected to on the indoor unit's control PC board?	Yes	2-2
			No	2-4
	2-2	Disconnect the connector mentioned above on the board of the indoor unit control PC board, and see whether the E02 goes off after several minutes. (When doing so, if two remote controllers are being used and the wireless remote controller is the main remote controller, set the other remote controller as the main.)	Yes	2-3
			No	2-4
	2-3	Replace wireless remote control parts including wiring.		
	2-4	Is there a short, miswiring, open, wrong contact or grounding in the remote control's wiring?	Yes	Correct the wiring
			No	Replace the indoor unit's control PC board

- Regarding the remote controller check, refer to the Reference Materials.
- For information on the procedures for replacing the nonvolatile memory (EEPROM) of the indoor unit and/or replacing the indoor unit's control board, refer to the manual that is packaged with the indoor unit service board.

E03 Error in Indoor Unit Receiving Signal from Remote Controller (central)

(When indoor unit(s) are connected)

1. Error Detection Method

It is judged an error when there is no communication from any remote controller (collectively) in a 3-minute period or if there is no communication from the central device in a 15-minute period.

- When there was once communication, but during use the remote control wiring is opened or miswired.
- The line to the central control unit for indoor/outdoor operations is opened.
- Settings are made only for sub remote controller.
- The power to the central control unit is not on and remote controllers are not being used (or the indoor/outdoor operations line to the central control unit is opened).
- When remote controller are not being used, only the sub remote controller is set up.

2. Error Diagnosis

1 Central control unit	1-1	Is the central control unit connected?	Yes	1-2
			No	2-1
	1-2	Is the central control unit's powered off?	Yes	Power on
			No	1-3
	1-3	Are all the Main/Sub switches on the connected central control unit set to Sub?	Yes	1-4
			No	1-5
	1-4	Of the central control units that are connected, set only the uppermost central control unit to Main and the others to Sub. The order from top to bottom is communication adaptor → system controller → ON/OFF controller.		
	1-5	Is the indoor/outdoor operations line connected to the central control unit opened?	Yes	Correct the setting
			No	2-1
2 Remote controller	2-1	Is the indoor unit under group control?	Yes	2-2
			No	3-1
	2-2	Are the wires 1 (white) & 2 (black) to the remote control group opened, have wrong contact or grounded?	Yes	Correct the setting
			No	3-1
3 Indoor unit control PC board	3-1	Is the wireless remote controller connected to on the indoor unit's control PC board?	Yes	3-2
			No	3-4
	3-2	Disconnect the connector mentioned above on the control PC board of the indoor unit control PC board, and see whether the E03 goes off after several minutes. (When doing so, if two remote controllers are being used and the wireless remote controller is the main remote controller, set the other remote controller as the main.)	Yes	3-3
			No	3-4
	3-3	Replace wireless remote control parts including wiring.		
	3-4	Is there a short, miswiring, open, wrong contact or grounding in the remote control's wiring?	Yes	Correct the wiring
			No	Replace the indoor unit control board

- Regarding the remote controller check, refer to the Reference Materials.
- For information on the procedures for replacing the nonvolatile memory (EEPROM) of the indoor unit and/or replacing the indoor unit's control board, refer to the manual that is packaged with the indoor unit service board.

Central Control Main/Sub Switch
Main: OFF Side
Sub: ON Side

System Controller

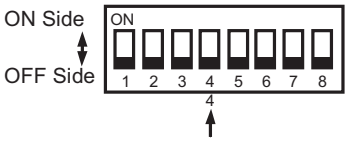

Central Control Main/Sub Switch
Main: OFF Side
Sub: ON Side

ON/OFF Controller

A747931 : 4-way Cassette Type Indoor Unit Control Board
Ceiling Type (T2 type) Indoor Unit Control Board

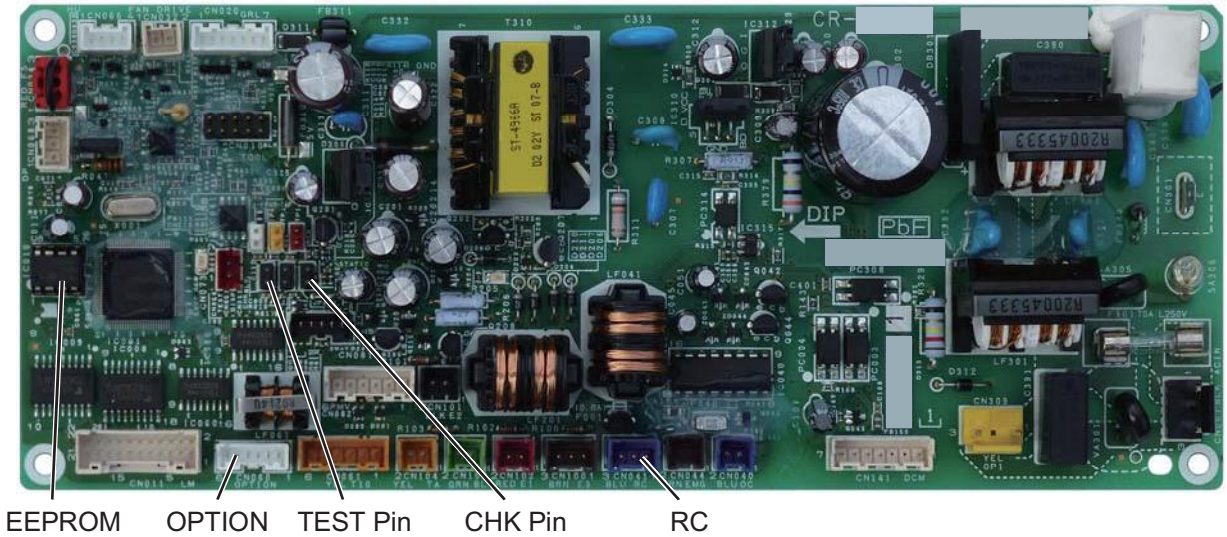

A747938 : Duct Type Indoor Unit Control Board

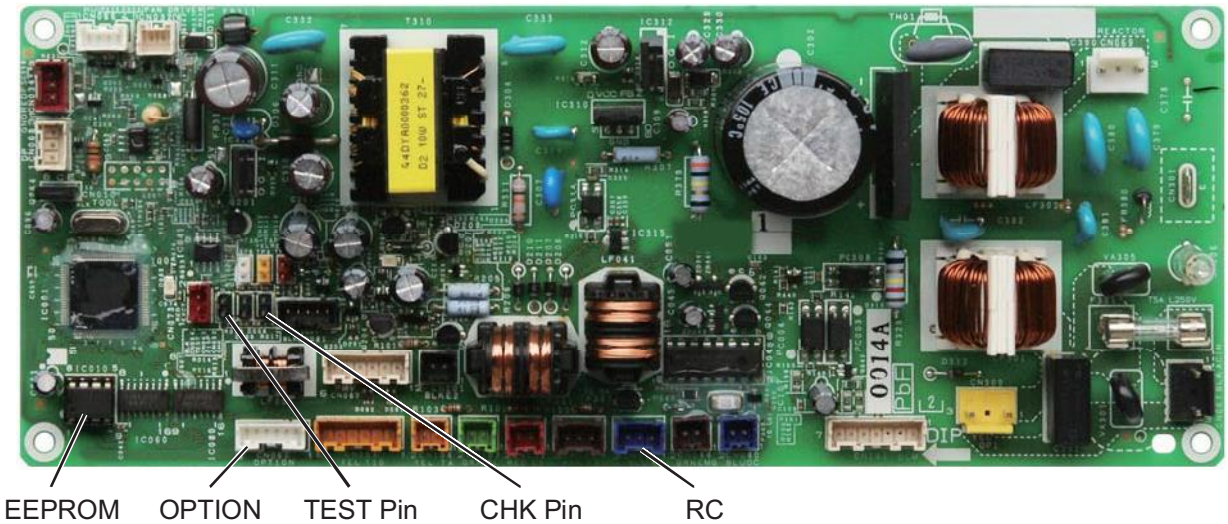

E04 Error in Indoor Unit Receiving Signal from the Outdoor unit

1. Error Detection Method

When there is no communication within a 3-minute period from the outdoor unit. Or, judged an error when no reply comes from the outdoor unit.

- The outdoor unit is not turned on.
- When the network of indoor/outdoor operation line was wired, the (SHORT) setting of the terminal resistor switch on the outdoor control PC board was set on multiple units (four or more).
- When the power was turned on after auto address setting was completed, the number of indoor units had been changed.
- Forgot to turn on the indoor unit.
- The CHK pin and/or TEST pin on the indoor unit's control PC board are shorted.
- Forgot to install the nonvolatile memory (EEPROM) when replacing the indoor unit control PC board.
- Mistakenly set the indoor unit address to Not Set in the remote control's detailed setting mode.
- When indoor unit addresses are duplicated.
- There is a short, open, wrong contact or grounding of the indoor/outdoor operation line.
- There is an error in the receiving circuit on the signal output PC board (optional control PC board).
- Malfunctions of the outdoor unit
- High voltage was applied (over AC200V) in the indoor/outdoor operations line circuit.
- The thermistor inside the indoor unit is grounded.

2. Error Diagnosis

1 Power Source	1-1	Is/was the power to the outdoor unit cut off?	Yes	After turning the power on, wait three minutes
			No	1-2
	1-2	Is the indoor unit powered off?	Yes	Power on
			No	2-1
2 Indoor/ outdoor control line	2-1	Is the indoor/outdoor operation line shorted, opened, grounded or has a wrong contact?	Yes	Correct the wiring
			No	2-2
	2-2	When the network of indoor/outdoor operation line was wired, was the (SHORT) setting of the terminal resistor switch on the outdoor control PC board set on multiple units (four or more)?	Yes	Normally the (SHORT) setting is just one unit.
			No	2-3
	2-3	Was a high voltage (over AC200V) applied in the indoor/outdoor operations line circuit?	Yes	3-2
			No	3-1
3 No. of Indoor Units	3-1	Was the number of indoor units increased or decreased after auto address setting was complete?	Yes	3-2
			No	3-3
	3-2	Conduct checks prior to auto address setting.		
	3-3	Check the indoor unit addresses from the remote control's detailed settings mode. Is it Not Set (99), or is the indoor unit's address duplicated?	Yes	3-2
			No	4-1
4 Indoor unit control PC board	4-1	Are the CHK pin and/or TEST pin on the indoor unit control PC board short-circuited?	Yes	Remove the short
			No	4-2
	4-2	Is the wireless remote controller connected to on the indoor unit's control PC board?	Yes	4-3
			No	4-5
	4-3	Disconnect the connector mentioned above on the control PC board of the indoor unit control PC board, and see whether the E04 goes off after several minutes. (When doing so, if two remote controllers are being used and the wireless remote controller is the main remote controller, set the other remote controller as the main.)	Yes	4-4
			No	4-5
	4-4	Replace wireless remote control parts including wiring.		
	4-5	Is the LED on the indoor unit control PC board blinking?	Yes	4-6
			No	4-7
	4-6	The nonvolatile memory (EEPROM) on the indoor unit's control PC board is either not installed, improperly installed or the nonvolatile memory is faulty. Correct this or after replacing the nonvolatile memory, write model data to it in the remote control detailed settings mode.		
	4-7	Are all the remote controllers of the other indoor units connected to that outdoor unit displaying E04?	Yes	Replace the outdoor unit control board
			No	Replace the indoor unit control board

5

- Regarding the remote controller check, refer to the Reference Materials.
- For information on the procedures for replacing the nonvolatile memory (EEPROM) of the indoor unit and/or replacing the indoor unit's control board, refer to the manual that is packaged with the indoor unit service board.

■ Outdoor Unit Control PCB

CR-50PE1E5 : Up side (U-50PE1E5)
(for single-phase outdoor unit PCB)

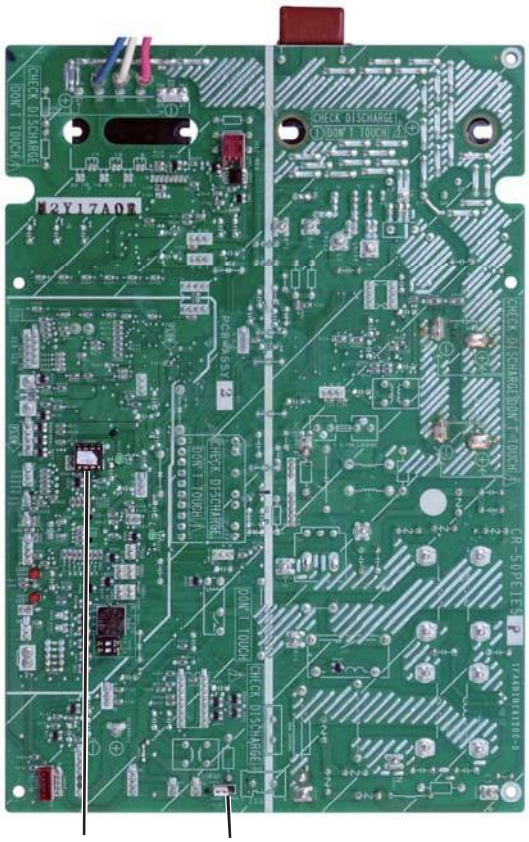

A747898 : (U-60PE1E5A, U-71PE1E5A)
(for single-phase outdoor unit PCB)

A747895 : (U-100PE1E5A)
(for single-phase outdoor unit PCB)

A747896 : (U-125PE1E5A, U-140PE1E5A)
(for single-phase outdoor unit PCB)

CR-60PEY1E5 : Up side (U-60PEY1E5)
(for single-phase outdoor unit PCB)

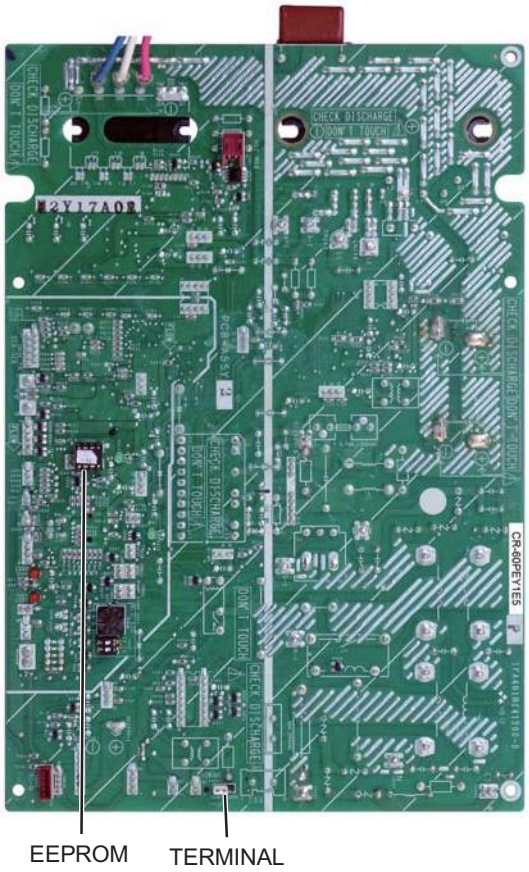

CR-71PEY1E5 : Up side (U-71PEY1E5)
(for single-phase outdoor unit PCB)

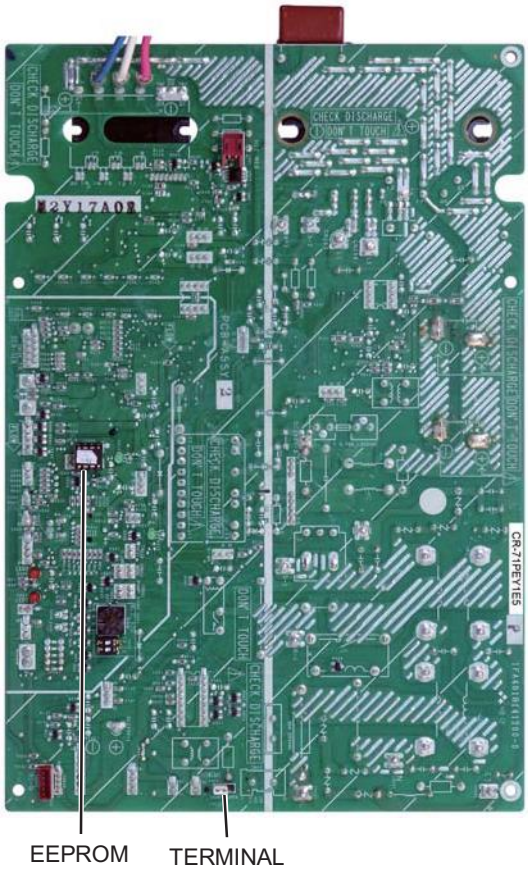

A747179 : (U-100PEY1E5)
(for single-phase outdoor unit PCB)

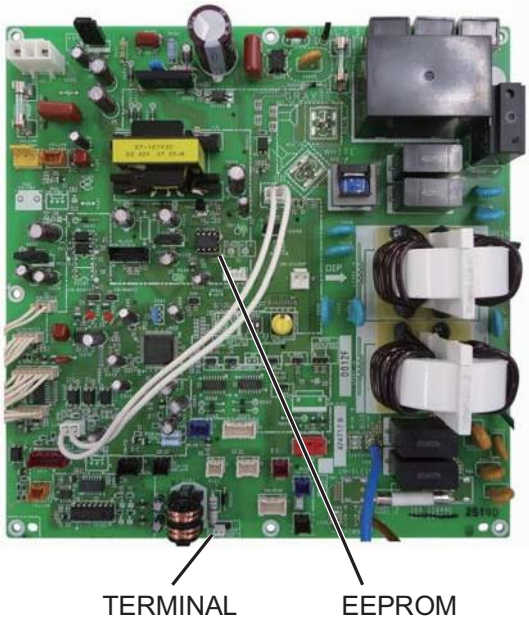

A747180 : (U-125PEY1E5)
(for single-phase outdoor unit PCB)

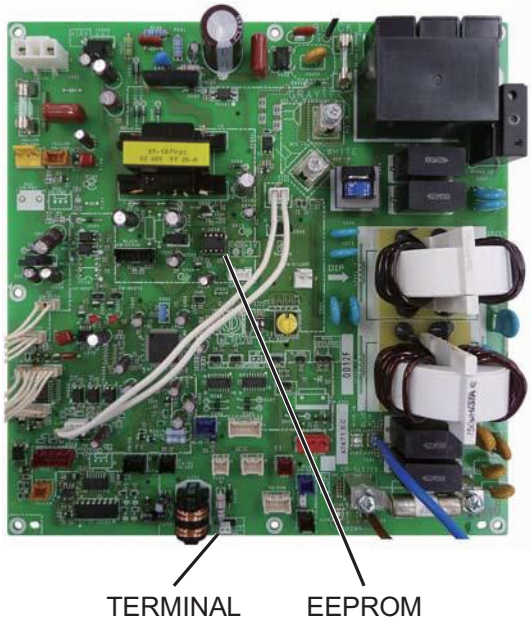

5

A747899 : (U-71PE1E8A)
A747897 : (U-100PE1E8A, U-125PE1E8A, U-140PE1E8A)
A747596 : (U-140PEY1E8)
(for 3-phase outdoor unit PCB)

A747247 : (U-100PEY1E8, U-125PEY1E8)
(for 3-phase outdoor unit PCB)

5

■ Indoor Unit Control PCB

A747931 : 4-way Cassette Type
Ceiling Type (T2 type)

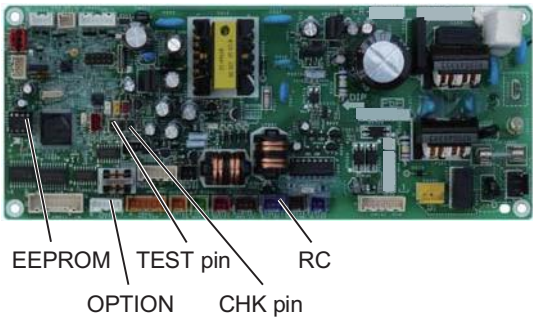

A747938 : Duct Type

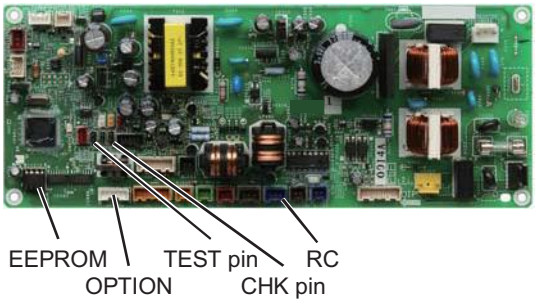

E05 Error in Indoor Unit Transmitting Signal to the Outdoor Unit

1. Error Detection Method

It is judged an error when a unit itself cannot receive a signal that it has sent.

- Indoor unit control PC board error
- The setting of the terminal resistor select switch on the outdoor unit main PC board is set incorrectly.

2. Error Diagnosis

1 Indoor unit control PC board	1-1	Is the indoor/outdoor operation line connected to more than one outdoor unit? (Network wired?)	Yes	1-2
			No	1-3
	1-2	Is the SHORT on the terminal resistor select switch on the outdoor main PC board set to one unit, and the others are OPEN?	Yes	1-4
			No	Set the SHORT to one unit only
	1-3	Is the terminal resistor select switch on the outdoor main PC board set to OPEN?	Yes	Make the SHORT setting
			No	1-4
	1-4	Is the indoor/outdoor operation line opened or shorted?	Yes	Correct the wiring
			No	1-5
	1-5	Replace the indoor unit control PC board.		

- For information on the procedures for replacing the indoor unit's control PC board, refer to the manual that is packaged with the indoor unit service board.

CR-50PE1E5 : Up side (U-50PE1E5)
(for single-phase outdoor unit PCB)

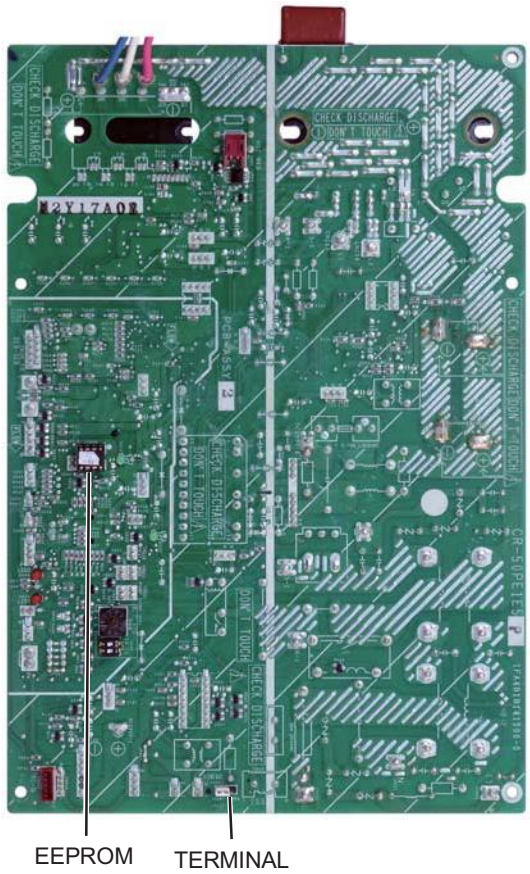

A747898 : (U-60PE1E5A, U-71PE1E5A)
(for single-phase outdoor unit PCB)

5

A747895 : (U-100PE1E5A)
(for single-phase outdoor unit PCB)

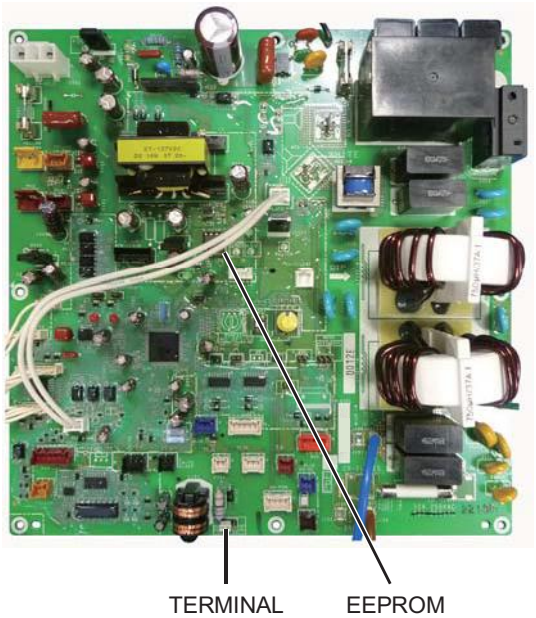

A747896 : (U-125PE1E5A, U-140PE1E5A)
(for single-phase outdoor unit PCB)

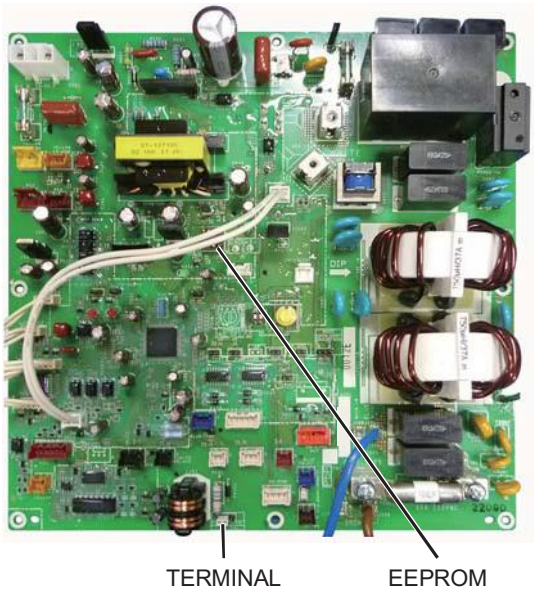

5

CR-60PEY1E5 : Up side (U-60PEY1E5)
(for single-phase outdoor unit PCB)

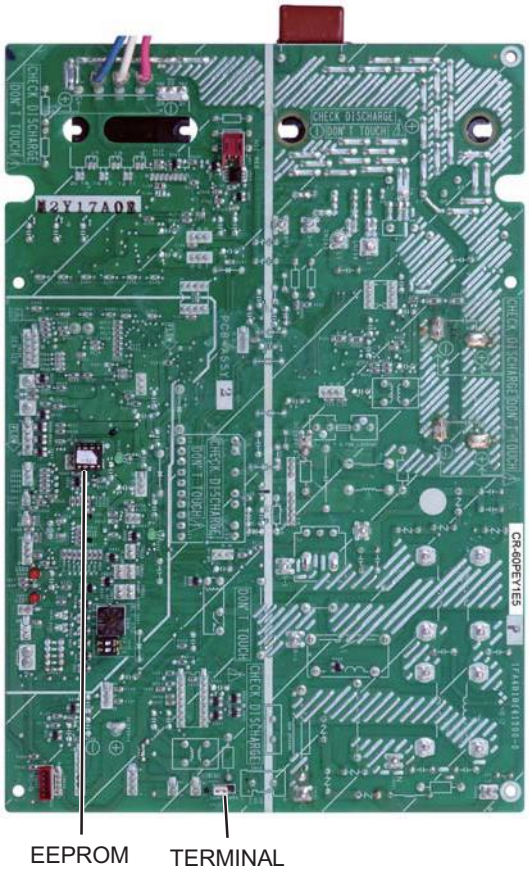

CR-71PEY1E5 : Up side (U-71PEY1E5)
(for single-phase outdoor unit PCB)

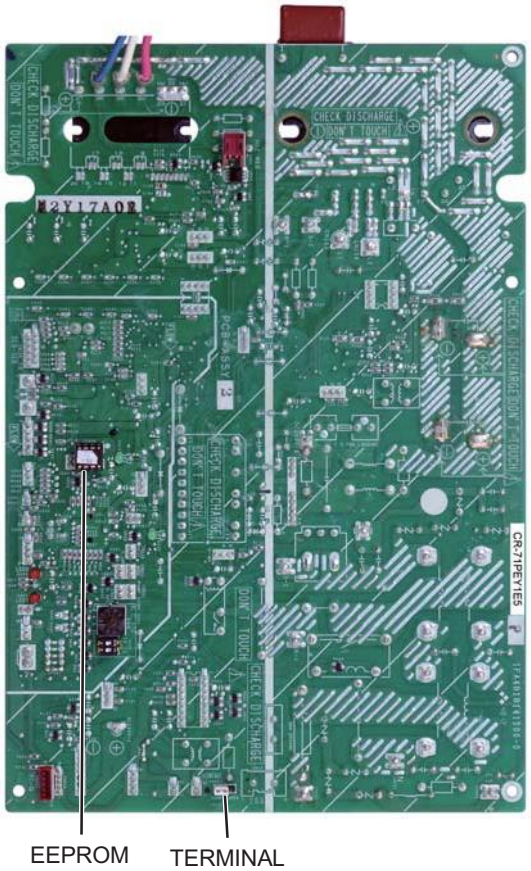

A747179 : (U-100PEY1E5)
(for single-phase outdoor unit PCB)

TERMINAL EEPROM

A747180 : (U-125PEY1E5)
(for single-phase outdoor unit PCB)

TERMINAL EEPROM

A747899 : (U-71PE1E8A)
A747897 : (U-100PE1E8A, U-125PE1E8A, U-140PE1E8A)
A747596 : (U-140PEY1E8)
(for 3-phase outdoor unit PCB)

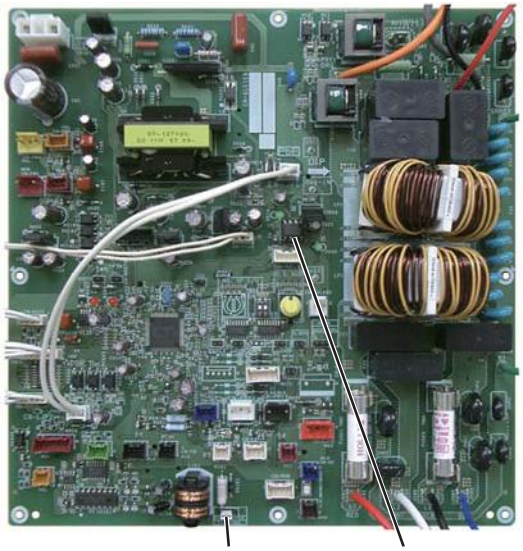

TERMINAL EEPROM

A747247 : (U-100PEY1E8, U-125PEY1E8)
(for 3-phase outdoor unit PCB)

TERMINAL EEPROM

5

E06 Outdoor Unit Failed to Receive Serial Communication Signals from Indoor Unit

(When indoor unit(s) are connected)

1. Error Detection Method

It is judged an error when there is no transmission (reply) from the indoor unit to the outdoor unit for a period of three minutes.

- The indoor unit is not turned on.
- The DISP pin of the indoor unit is shorted.
- There is a short, open, wrong contact or grounding of the indoor/outdoor operation line.
- The signal output control PC board (optional control PC board) inside the indoor unit has failed.
- The thermistor inside the indoor unit is grounded.

2. Error Diagnosis

1 Indoor unit power	1-1	Is the indoor unit powered off?	Yes	Power on
			No	2-1
2 Indoor/ outdoor operation line	2-1	Is the indoor/outdoor operation line shorted, opened, grounded or has a wrong contact?	Yes	Correct the wiring
			No	3-1
3 Indoor units control PC board	3-1	Are the DISP pin and CHK pin on the indoor unit control PC board short-circuited?	Yes	Remove the short
			No	3-2
	3-2	Is the wireless remote controller connected to on the indoor unit's control PC board?	Yes	3-3
			No	3-5
	3-3	Disconnect the connector mentioned above on the control PC board of the indoor unit control PC board, and see whether the E06 goes off after several minutes. (When doing so, if two remote controllers are being used and the wireless remote controller is the main remote controller, set the other remote controller as the main.)	Yes	3-4
			No	3-5
	3-4	Replace wireless remote control parts including wiring.		
	3-5	Indoor unit control PC board failure → Replace board.		

- For information on the procedures for replacing the indoor unit's control board, refer to the manual that is packaged with the indoor unit control PCB.

A747931 : 4-way Cassette Type
Ceiling Type (T2 type)

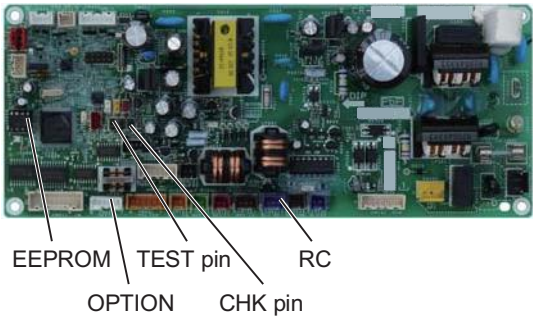

A747938 : Duct Type

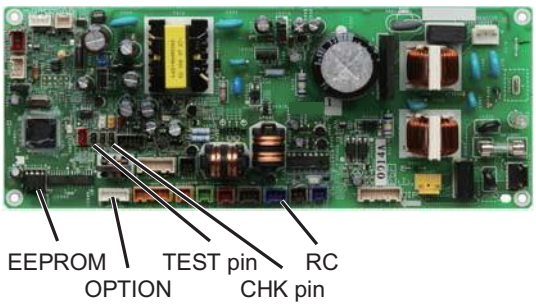

E08 Duplicate Indoor Unit Address Settings Error

1. Error Detection Method

It is judged an error if the addresses of indoor units are duplicated.

- The indoor unit address settings are duplicated in the remote control detailed settings mode.
- The multiple unit DISP pin is shorted across the indoor unit whose address is Not Set.

2. Error Diagnosis

1 Indoor unit control PC board	1-1	Is the DISP pin on the indoor unit control PC board shorted?	Yes	Remove the short
			No	1-2
	1-2	Conduct checks prior to auto address setting. Does E08 fail to go off even after running auto address setting again?	Yes	1-3
			No	1-4
	1-3	The nonvolatile memory (EEPROM) on the indoor unit board has failed. ↓ Replace the EEPROM.		
	1-4	Do not make changes to indoor unit addresses with the detailed settings of the remote controller. Make them in the remote control address change mode.		

- For information on the procedures for replacing the nonvolatile memory (EEPROM) of the indoor unit, refer to the manual that is packaged with the indoor unit service board.

A747931 : 4-way Cassette Type
Ceiling Type (T2 type)

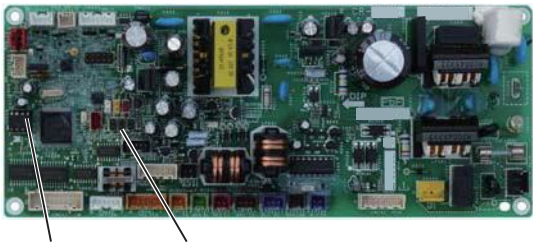

A747938 : Duct Type

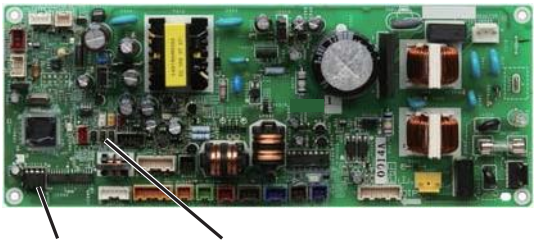

5

E09 More Than One Remote Controller Set to Main Error

1. Error Detection Method

It is judged an error when more than one remote controller in a remote control group is set as the main remote controller.

- Forgot to set one remote controller to sub in a 2-remote control group.
- When using one wireless and one wired remote controller in a control group, forgot to set one of them to sub.

2. Error Diagnosis

1 Remote controller	1-1	Set one of the 2 remote controllers to sub.

- Method for setting a remote controller to sub (CZ-RTC2)

1. Press and hold both [ ] + [SET] buttons for 4 seconds or longer.
2. This will display SETTING , the item “01” and the setting data “0001” or the like on the remote controller’s display.
3. Press Timer [▲] / [▼] buttons to switch the setting data to “0000”. (0000:SUB 0001:Main)
4. Press [SET] button (Once the display changes from flashing to steady, the setting is complete).
5. Once you press [🔧] button, the remote controller returns to its normal display.

Wireless remote controller

CZ-RWSU2

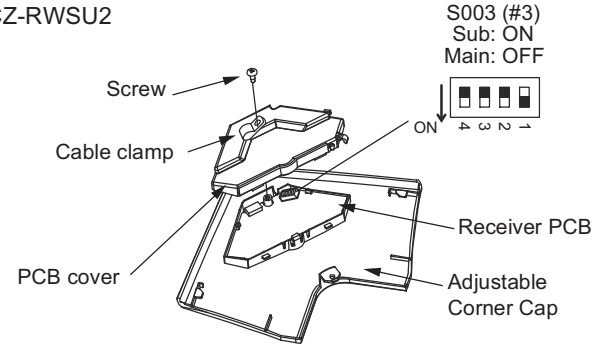

CZ-RWST2 • CZ-RWST3

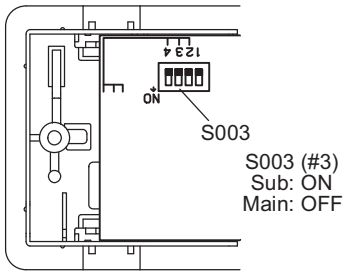

CZ-RWSC2

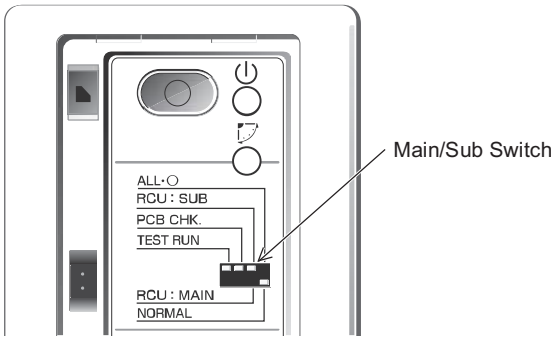

CZ-RWSL2

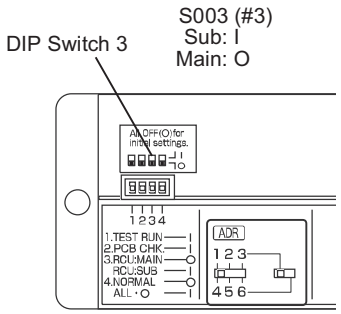

E12Automatic Address Setting Start is Prohibited while Auto-address Setting in Progress.

1. Error Detection Method

It is judged an error if a command to start auto address setting comes from another controller during auto address setting.

- This occurs in a system that has more than one outdoor unit and operating lines among the indoor/outdoor units (networked wiring), when an instruction to start auto address setting is given from another controller during the auto address setting process.

2. Error Diagnosis

1 Auto Address	1-1	When one controller in a networked system is running auto address setting, it is not possible to start auto address setting from another controller. Wait until the auto address setting in progress finishes.

5

E14 Main Unit duplication in Simultaneous-operation Multi Control (detected outdoor unit)

1. Error Detection Method

It is judged an error that the main units are duplicated in the indoor unit group.

- Main unit setting was made in the indoor unit group control setting of the remote control detailed settings mode.

2. Failure Diagnosis

1 Group Control Address	1-1	Are multiple indoor units set up as the main unit?	Yes	2-1
			No	2-2
2 Installation & Setting	2-1	Set up only one indoor unit as the main unit and other indoor units to the sub-unit.		
	2-2	Carry out the auto address setting.		

5

E15 Automatic Address Alarm (The total capacity of indoor units is too low.)

1. Error Detection Method

Connecting indoor unit
It is judged an error the total capacity of indoor units replied by communication is lower than that of outdoor unit.

- The total capacity of indoor units is lower than that of outdoor unit.
- Some indoor unit(s) are connected but power is not turned on.
- The CHK pin (CN062/CN071) and/or TEST pin (CN064) of the indoor unit is shorted when its power is turned on.
- High voltage was applied (over AC200V) in the indoor/outdoor operations line circuit.

2. Error Diagnosis

1 Power Source	1-1	Is the indoor unit powered off?	Yes	Power on
			No	2-1
2 Indoor/ outdoor control line	2-1	Is the indoor/outdoor control line opened or shorted?	Yes	Correct the wiring
			No	2-2
	2-2	Was a high voltage (over AC200V) applied in the indoor/outdoor operations line circuit?	Yes	3-2
			No	3-1
3 No. of Indoor Units	3-1	Was the number of indoor units changed after auto address setting finished?	Yes	3-2
			No	4-1
	3-2	Conduct checks prior to auto address setting.		
4 Indoor unit control PC board	4-1	Are the CHK pin and TEST pin on the indoor unit control board short-circuited?	Yes	Remove the short
			No	4-2
	4-2	Is the wireless remote controller connected to on the indoor unit's control PC board?	Yes	4-3
			No	4-5
	4-3	Disconnect the connector mentioned above on the control PC board of the indoor unit control PC board and see whether the E15 goes off after several minutes. (When doing so, if two remote controllers are being used and the wireless remote controller is the main remote controller, set the other remote controller as the main.)	Yes	4-4
			No	4-5
	4-4	Replace wireless remote control parts including wiring.		
	4-5	Is the LED blinking on the indoor unit's control PC board?	Yes	4-6
			No	5-1
	4-6	The nonvolatile memory (EEPROM) on the indoor unit's control board is either not installed, improperly installed or the nonvolatile memory is faulty. Correct this or after replacing the nonvolatile memory, write model data to it in the remote control detailed settings mode.		
5 Outdoor unit control PC board	5-1	Check all items under the section "Check Prior to Auto Address Setting".		

- For information on the procedures for replacing the nonvolatile memory (EEPROM) of the indoor unit, refer to the manual that is packaged with the indoor unit service board.
- For information on the remote control's detailed settings, refer to the Reference Materials.

A747931 : 4-way Cassette Type
Ceiling Type (T2 type)

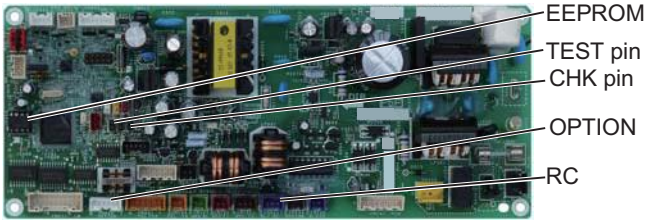

A747938 : Duct Type

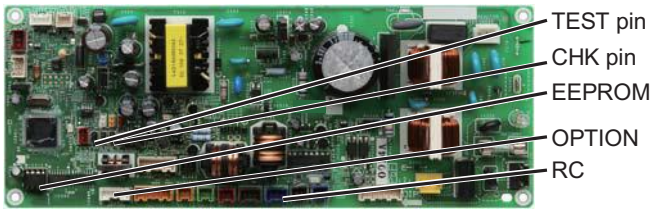

5

E16 Automatic Address Alarm (The total capacity of indoor units is too high.)

1. Error Detection Method

It is judged an error the total capacity of indoor units is too high or the total number of indoor units is too many.

- The total capacity of indoor units is too high.
- The total number of indoor units is too many.

2. Error Diagnosis

1 Auto Address	1-1	Check all items under the section “Check Prior to Auto Address Setting”.

5

E18 Faulty Communication in Group Control Wiring

1. Error Detection Method

When the main remote controller cannot communicate with a sub remote controller in the remote control group.
It is judged an error if a sub remote controller in a remote control group fails to communicate with the main remote controller for a period of three minutes.

- An indoor unit within the control group does not have its power on.
- The CHK pin and TEXT pin on the indoor unit in the control group are shorted.
- The DISP pin of an indoor unit sub remote controller in the control group is shorted.
- Remote control group wiring is opened.
- More than one indoor unit in the control group is set to Main.
- An indoor unit in the control group is set to Separate.

2. Error Diagnosis

1 Indoor Unit	1-1	Is the indoor unit powered off?	Yes	Power on
			No	1-2
	1-2	Are the CHK pin, TEST pin and DISP pin on the indoor unit control PC board short-circuited?	Yes	Remove the short
			No	2-1
2 Substitute Sub Remote Controller	2-1	Is the remote control group's wiring opened?	Yes	Correct the wiring
			No	2-2
	2-2	Check the group settings (Item Code 14) from the remote control's detailed settings mode. Is the main remote controller (1) set to more than one remote controller or to separate (0)?	Yes	2-3
			No	3-1
	2-3	Is the wiring of the remote control group wired according to the wiring diagram?	Yes	2-4
			No	2-5
	2-4	Run the auto address setting again.		
	2-5	Run the auto address setting again after correcting the wiring of the remote control group.		
3 Indoor unit control PCB	3-1	Is the wireless remote controller connected to on the indoor unit's control PC board?	Yes	3-2
			No	3-4
	3-2	Disconnect the connector mentioned above on the control PC board of the indoor unit control PC board, and see whether the E18 goes off after several minutes. (When doing so, if two remote controllers are being used and the wireless remote controller is the main remote controller, set the other remote controller as the main.)	Yes	3-3
			No	3-4
	3-3	Replace wireless remote control parts including wiring.		
	3-4	Replace the indoor unit control PC board.		

- For information on the remote control's detailed settings, refer to the Reference Materials.
- For information on the procedures for replacing the Indoor unit control PCB, refer to the manual that is packaged with the indoor unit service board.

A747931 : 4-way Cassette Type
Ceiling Type (T2 type)

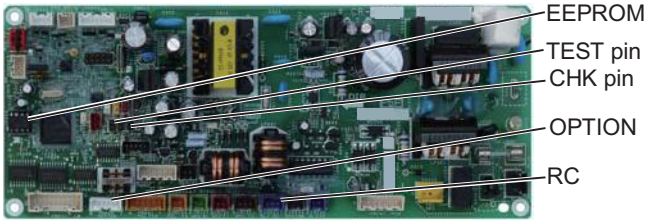

A747938 : Duct Type

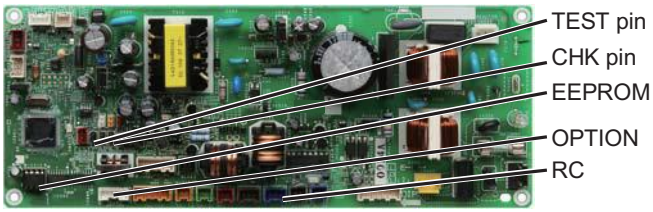

E20 Connection Problem of Indoor/Outdoor Units

1. Error Detection Method

The outdoor unit detects an error at following cases during auto address setting.

- Indoor unit is not turned On.
- Indoor/outdoor control line is disconnected and also detects an error in the following cases when the outdoor unit is turned On.
- Address(es) of indoor unit(s) are not assigned correctly.
- Capacity of indoor/outdoor units is mismatched.
- Total number of indoor units is too many.

2. Error Diagnosis

1 Indoor Unit	1-1	Are the address(es) of indoor unit(s) assigned correctly?	Yes	1-2
			No	Set its address
	1-2	Are the indoor units turned on?	Yes	1-3
			No	Power on
	1-3	Be sure that the indoor and outdoor units are connected with correct combination written in catalog.	Yes	1-4
			No	Correct the connection
	1-4	The indoor/outdoor control line may be disconnected somewhere between the indoor unit(s) and the outdoor unit. Make sure the indoor/outdoor control line is connected.		

F04 Compressor Discharge Temperature Sensor (TD) Trouble

1. Error Detection Method

It is judged an error based on the criteria listed below.

- Open circuit or Short circuit

2. Error Diagnosis

1 Sensor	1-1	Sensor connector is connected to PC board properly.	Yes	1-2
			No	Reconnect and check
	1-2	Sensor is correctly installed at holder side.	Yes	Replace sensor
			No	Correct and see what happens. 1-3
	1-3	Abnormal temperature exists even after replacing sensor.	Yes	2-1
			No	See what happens.
2 PC board	2-1	Resistance between connector pins on PC board is less than 1 k ohm	Yes	Replace PC board
			No	2-2
	2-2	Abnormal temperature exists even after replacing PC board.	Yes	3-1
			No	See what happens.
3 Operating status	3-1	Peripheral temperature of outdoor unit is over 46°C.	Yes	Correct
			No	3-2
	3-2	Tends to have insufficient refrigerant charge in the system.	Yes	Adjust the amount of refrigerant
			No	3-3
	3-3	Check noise.		

5

F06 Inlet Temperature Sensor (C1) in Heat Exchanger Trouble

1. Error Detection Method
   - In case of open or short

2. Error Diagnosis

1 Sensor Trouble	1-1	Is the connector properly connected to PCB?	Yes	1-2
			No	Reconnect & check
	1-2	Is the resistor between the sockets infinity or 0Ω?	Yes	Replace sensor.
			No	2-1
2 Control PCB Failure	2-1	Outdoor unit control PCB failure Replace PCB with a new one.		

5

F07 Intermediate Temperature Sensor (C2) in Heat Exchanger Trouble

1. Error Detection Method

It is judged an error when open circuit or short circuit.

2. Error Diagnosis

1 Sensor	1-1	Sensor connector is connected to PC board properly.	Yes	1-2
			No	Reconnect and check
	1-2	Resistance between sockets is infinity or 0 ohm.	Yes	Replace sensor
			No	2-1
2 PC board	2-1	Replace PC board because of outdoor control PC board failure.		

5

F08 Outdoor Air Temperature Sensor (TO) Trouble

1. Error Detection Method

It is judged an error when open circuit or short circuit.

2. Error Diagnosis

1 Sensor	1-1	Sensor connector is connected to PC board properly.	Yes	1-2
			No	Reconnect and check
	1-2	Resistance between sockets is infinity or 0 ohm.	Yes	Replace sensor
			No	2-1
2 PC board	2-1	Replace PC board because of outdoor control PC board failure.		

5

F12 Compressor inlet Suction Temperature Sensor (TS) Trouble

1. Error Detection Method

It is judged an error when open circuit or short circuit.

2. Error Diagnosis

1 Sensor	1-1	Sensor connector is connected to PC board properly.	Yes	1-2
			No	Reconnect and check
	1-2	Resistance between sockets is infinity or 0 ohm.	Yes	Replace sensor
			No	2-1
2 Outdoor control PC board	2-1	Replace PC board because of outdoor control PC board failure.		

5

F31 Outdoor Unit Nonvolatile Memory (EEPROM) Trouble

1. Error Detection Method

It is judged an error based on the criteria listed below.

- When power initially turned ON for the first time, nonvolatile memory (EEPROM) is not installed.
- Read values after writing onto nonvolatile memory (EEPROM) is inconsistent.

2. Error Diagnosis

1 PC board	1-1	Does EEPROM exist on the control PC board?	Yes	1-2
			No	Install EEPROM
	1-2	Is EEPROM installed properly? (Check: Bent IC pin or incorrect installation, etc.)	Yes	1-3
			No	Correct
	1-3	Incorrect EEPROM Replace with correct EEPROM.		

5

H01 Primary (input) Overcurrent Detected

1. Error Detection Method

- Primary current effective value detected overcurrent (trip current value).

Trip current value — hp = horse power

Single-phase model	2.5 hp	3 hp	4 hp	5 hp	6 hp
Heating	20.0A	20.0A	27.0A	29.0A	30.0A
Cooling	18.5A	18.5A	27.0A	29.0A	30.0A

Trip current value — hp = horse power

3-phase model	4 hp	5 hp	6 hp
Heating	12.5A	13.5A	14.5A
Cooling	12.0A	12.6A	13.0A

2. Error Diagnosis

1 Power supply*	1-1	Not satisfied with ±10□ rated supply voltage	Yes	Check power supply
			No	1-2
	1-2	Extreme voltage fluctuations	Yes	Check power supply
			No	1-3
	1-3	Extreme distortion of voltage waveform	Yes	Check power supply
			No	1-4
	1-4	Instantaneous blackout may sometimes occur.	Yes	Check power supply
			No	2-1
2 PC board wiring	2-1	Has FUSE 1/FUSE 2 blown? Check the electrical conduction with tester.	Yes	2-3
			No	2-2
	2-2	Loose electrical wire connection	Yes	Correct wiring
			No	2-3
	2-3	Replace CR board.		

* Check not only in the outdoor unit stop mode but in the drive mode.

CR-50PE1E5 : bottom (U-50PE1E5)
(for single-phase outdoor unit PCB)

A747898 : (U-60PE1E5A, U-71PE1E5A)
(for single-phase outdoor unit PCB)

5

A747895 : (U-100PE1E5A)
(for single-phase outdoor unit PCB)

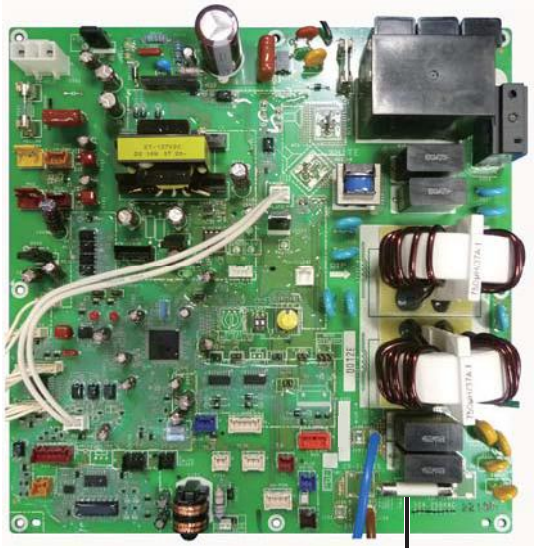

FUSE1

A747896 : (U-125PE1E5A, U-140PE1E5A)
(for single-phase outdoor unit PCB)

FUSE1

CR-60PEY1E5 : bottom (U-60PEY1E5)
(for single-phase outdoor unit PCB)

F001

CR-71PEY1E5 : bottom (U-71PEY1E5)
(for single-phase outdoor unit PCB)

F001

A747179 : (U-100PEY1E5)
(for single-phase outdoor unit PCB)

FUSE1

A747180 : (U-125PEY1E5)
(for single-phase outdoor unit PCB)

FUSE1

A747899 : (U-71PE1E8A)
A747897 : (U-100PE1E8A, U-125PE1E8A,
U-140PE1E8A)
A747596 : (U-140PEY1E8)
(for 3-phase outdoor unit PCB)

FUSE1

A747247 : (U-100PEY1E8, U-125PEY1E8)
(for 3-phase outdoor unit PCB)

FUSE1

5

H02 PAM Trouble (Single-phase only)

1. Error Detection Method

- Error is detected by over-voltage and overcurrent of DC side.

2. Error Diagnosis

1 Power supply*	1-1	Not satisfied with ±10□ rated supply voltage	Yes	Check power supply
			No	1-2
	1-2	Extreme voltage fluctuations	Yes	Check power supply
			No	1-3
	1-3	Extreme distortion of voltage waveform	Yes	Check power supply
			No	2-1
2 PC board wiring	2-1	Loose electrical wire connection	Yes	Correct connection
			No	2-2
	2-2	Is HIC PC board connector (CN-PAM) poorly connected or opened with wire?	Yes	Correct connection or wiring
			No	2-3
	2-3	Replace HIC PC board.		

* Check not only in the outdoor unit stop mode but in the drive mode.

H03 Primary Current CT Sensor (current sensor) Failure

1. Error Detection Method

It is judged an error based on the criteria listed below.

- If 18A or greater is detected when the compressor is stopped (alarm triggered even if the connector is unplugged).
- If no current is detected even though a compressor is running.

2. Error Diagnosis

1 Check the control PC board	1-1	Turn the power on again and run the outdoor unit. Is alarm occurred after operation?	Yes	Replace CR board.
			No	See what happens.

5

H05 Sensor Failure, Compressor Discharge Temperature Sensor (TD) Disconnected

1. Error Detection Method

- (In case of outdoor temperature over 5°C) For 10 minutes since started, variation of discharge temperature is always detected within 2°C comparing with the temperature just before starting.
- (In case of outdoor temperature less than 5°C) For 30 minutes since started, variation of discharge temperature is always detected within 2°C comparing with the temperature just before starting.

1 Sensor Trouble	1-1	Is the sensor properly installed at the holder side?	Yes	1-2
			No	Reinstall correctly.
	1-2	Replace the sensor with a new one.		

H31 HIC Trouble

1. Error Detection Method

It is judged an error if the computer detects an error signal from the HIC.
An error signal is issued by the HIC if abnormal heat occurs inside the HIC or if there is an overcurrent.
However, it is judged an error in the same way if the signal line from the HIC is not connected properly or opened.

- HIC overcurrent due to HIC fault
- HIC abnormal heat caused by defective HIC or HIC radiation error
- Signal line is not connected properly or opened between the HIC and the outdoor CR board.

2. Error Diagnosis

1 Wiring between HIC & outdoor control PC board	1-1	The wiring (power cord and signal line) between the HIC and the outdoor CR board is connected properly.	Yes	1-2
			No	Correct wiring (connector)
	1-2	Everything is normal in the wiring (power cord & signal line) between the HIC and the outdoor CR board. Check the wiring one by one with a tester if there is opened and grounding.	Yes	3-1 : Single-phase model 2-1 : 3-phase model
			No	Replace wiring
2 Check the outdoor unit CR PC board	2-1	The connector CN-PRY1 on the CR PC board is connected properly (locked). (3-phase only)	Yes	3-1
			No	Correct wiring (connector)
3 HIC poor radiation	3-1	The heat dissipating surface on the back of the HIC is in good contact with the heat sink (heat dissipating fins) of the electrical box. Check for looseness in the fastening screws and the condition of the heat-conducting putty.	Yes	3-2
			No	Tighten screw(s), add putty
	3-2	A good flow of cooling air passes through the heat sink (heat dissipating fins) of the electrical box. Check for debris blocking the fins.	Yes	4-1
			No	Remove foreign matter
4 HIC overcurrent	4-1	The results of the pass/fail tests for the following HIC board IPM show it to be outside the range of the resistance of a conforming part.	Yes	Replace the HIC PC board
			No	4-2
	4-2	The inverter compressor was stopped/started more than 10 times and it triggered H31 at a high rate. If alarm code P16 occurs at times, refer to the alarm code P16.	Yes	Replace the HIC PC board
			No	Refer to alarm code P16

● HIC board IPM Pass/Fail Tests

- Measure with an analog tester. (Set to the k ohm range)
- Measure the board by itself. (Remove wires connected from other parts.)
- Measure using IPM terminals.

★ Conforming part resistance value (measure with an analog tester)

Tester terminals								
+	P				NU			
-	U	V	W	NU	U	V	W	P
Resistance value (ohm)	1 k to 5 k	1 k to 5 k	1 k to 5 k	5 k to 10 k	100 k to ∞	100 k to ∞	100 k to ∞	100 k to ∞

Tester terminals								
-	P				NU			
+	U	V	W		U	V	W	
Resistance value (ohm)	100 k to ∞	100 k to ∞	100 k to ∞		1 k to 5 k	1 k to 5 k	1 k to 5 k	

- Excepting the parts of " 100 k to ∞ ", it is acceptable if a small resistance value appears as a reference value unless the value is "0 = short-circuit".

Tester terminals								
+	HIC+				HIC-			
-	U	V	W	HIC-	U	V	W	HIC+
Resistance value (ohm)	1 k to 10 k	1 k to 10 k	1 k to 10 k	5 k to 20 k	20 k to ∞	20 k to ∞	20 k to ∞	20 k to ∞

Tester terminals								
-	HIC+				HIC-			
+	U	V	W		U	V	W	
Resistance value (ohm)	20 k to ∞	20 k to ∞	20 k to ∞		1 k to 10 k	1 k to 10 k	1 k to 10 k	

- Excepting the parts of " 20 k to ∞ ", it is acceptable if a small resistance value appears as a reference value unless the value is "0 = short-circuit".

■ Outdoor Unit Control PCB

CR-50PE1E5 : bottom (U-50PE1E5)
(for single-phase outdoor unit PCB)

■ Outdoor Unit Control HIC PCB

A746895 : (U-60PE1E5A, U-71PE1E5A)
(for single-phase outdoor unit HIC PCB)

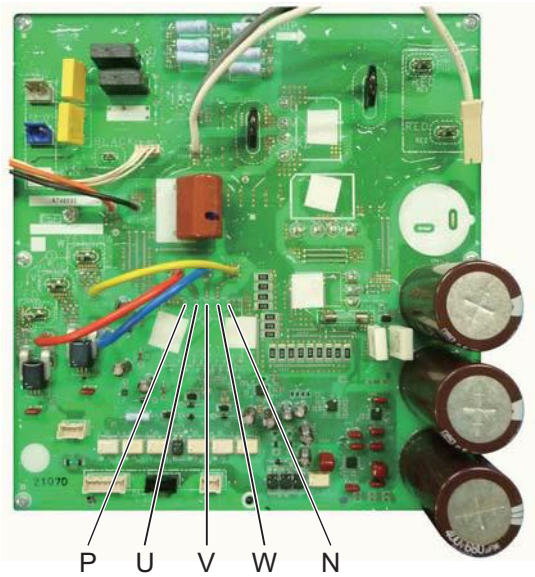

■ Outdoor Unit Control HIC PCB

A746846 : (U-100PE1E5A)
(for single-phase outdoor unit HIC PCB)

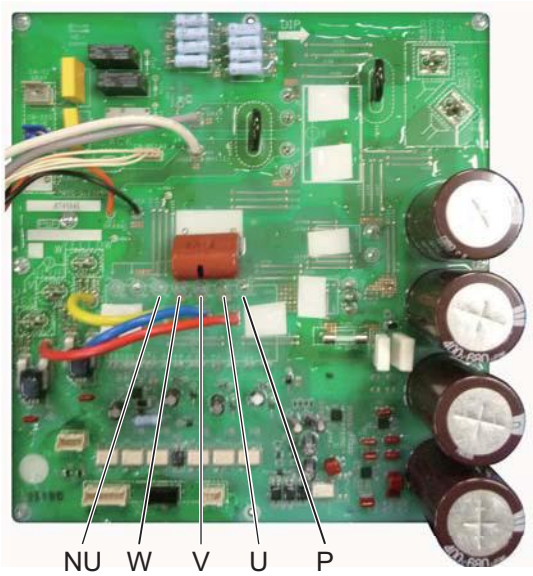

A746847 : (U-125PE1E5A, U-140PE1E5A)
(for single-phase outdoor unit HIC PCB)

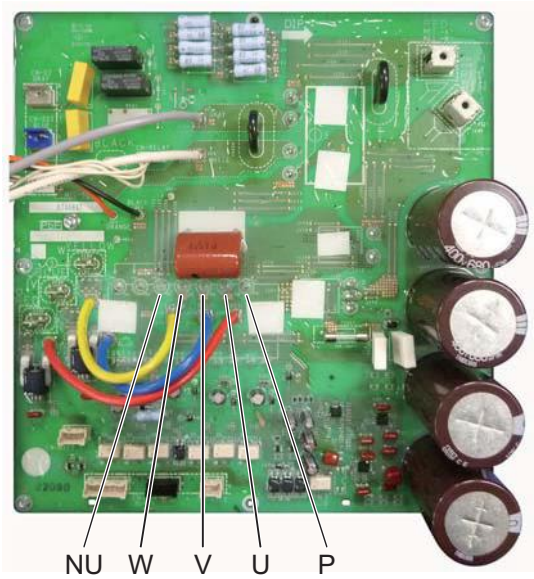

■ Outdoor Unit Control PCB

CR-60PEY1E5 : bottom (U-60PEY1E5)
(for single-phase outdoor unit PCB)

CR-71PEY1E5 : bottom (U-71PEY1E5)
(for single-phase outdoor unit PCB)

5

A746846 : (U-100PEY1E5)
(for single-phase outdoor unit HIC PCB)

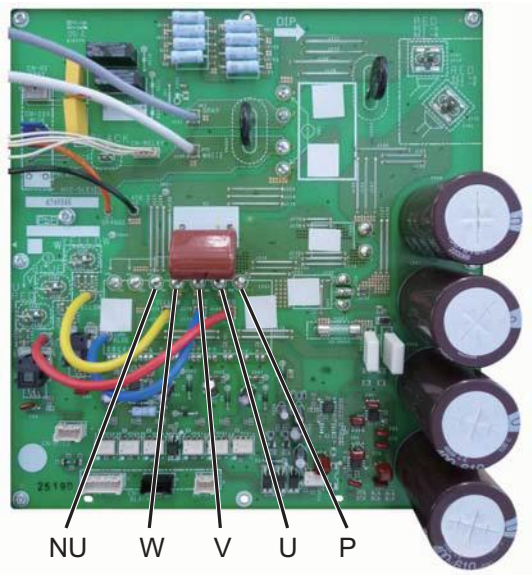

A746847 : (U-125PEY1E5)
(for single-phase outdoor unit HIC PCB)

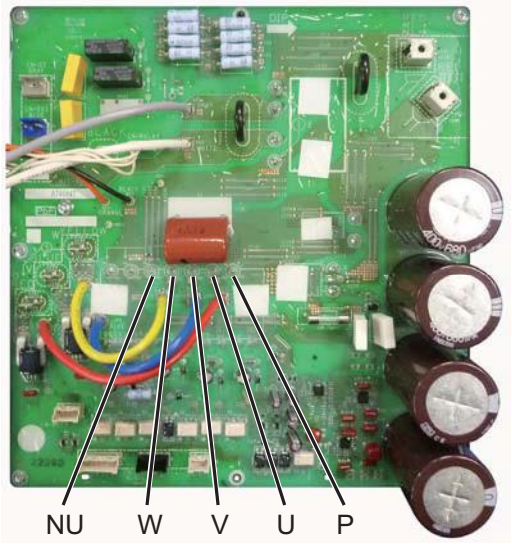

A746970 : (U-71PE1E8A)
A746969 : (U-100PE1E8A, U-125PE1E8A,
U-140PE1E8A, U-140PEY1E8)
(for 3-phase outdoor unit HIC PCB)

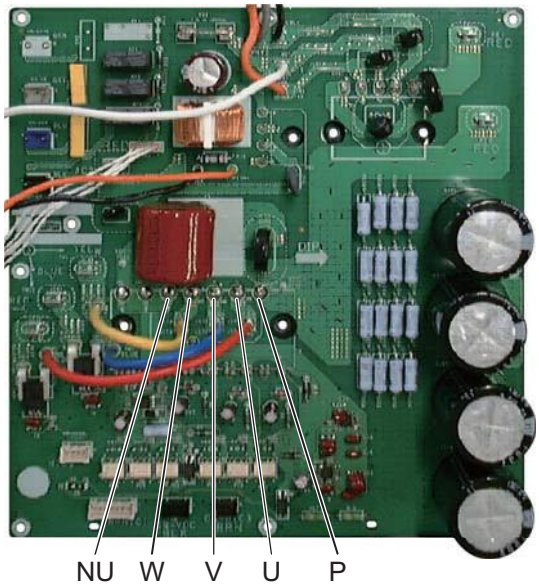

A747248 : (U-100PEY1E8, U-125PEY1E8)
(for 3-phase outdoor unit HIC PCB)

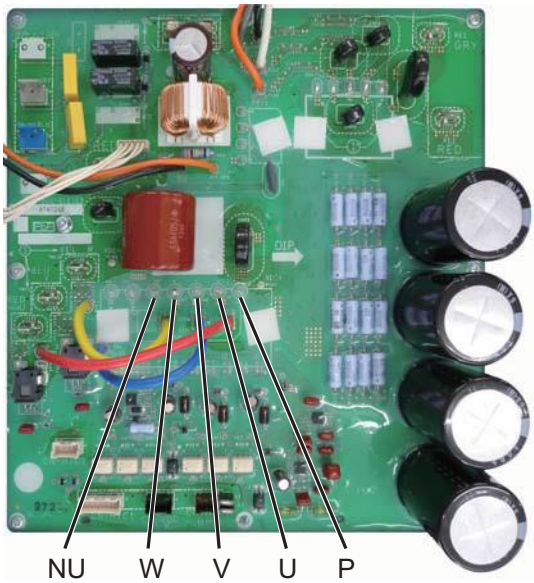

■ Outdoor Unit Control PCB

A747899 : (U-71PE1E8A)
A747897 : (U-100PE1E8A, U-125PE1E8A,
U-140PE1E8A)
A747596 : (U-140PEY1E8)
(for 3-phase outdoor unit PCB)

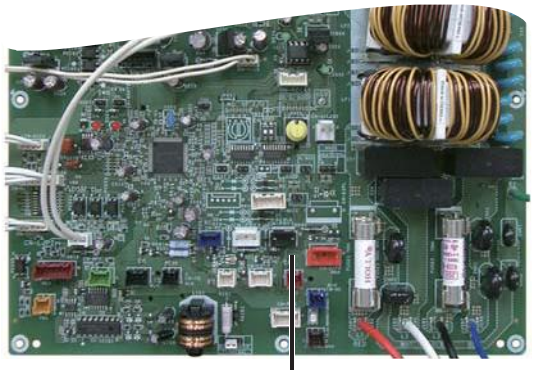

A747247 : (U-100PEY1E8, U-125PEY1E8)
(for 3-phase outdoor unit PCB)

L04 Outdoor Unit Address Duplication

1. Error Detection Method

It is judged an error when the identical self-address communication on the indoor and outdoor wirings is received over 5 times within 3 minutes.

2. Error Diagnosis

1 System address	1-1	Are other outdoor units using a duplicate setting?	Yes	2-1
			No	2-2
2 Installation or setting related	2-1	When units are networked, first set the system address for each outdoor unit in the order 1-2-3 and then run auto address setting.		
	2-2	Run the auto address setting.		

5

L10 Outdoor Unit Capacity not Set or Invalid

1. Error Detection Method

It is judged an error when outdoor unit capacity not yet setup or systematically unauthorized setting.

2. Error Diagnosis

1 Check the control PC board	1-1	Was EEPROM replaced when PC board was replaced?	Yes	2-1
			No	Replace EEPROM
2 Installation or setting related	2-1	Set an applicable capacity value on the item code 81 display of maintenance remote controller.		

- Check : Connect the outdoor maintenance remote controller and check whether item code 81 outdoor capacity value shows “0” or unauthorized capacity is set on the detailed setting mode display of the outdoor EEPROM.
  If the capacity value of the item code 81 with the outdoor maintenance remote controller is incorrect, recorrect and set it again.
  * After setting the capacity value, be sure to reset the power supply switches of both indoor and outdoor units.

L13 Indoor Unit Type Setting Error

1. Error Detection method
   - Discordance model(s) between outdoor and indoor units are detected.

1 Discordance Unit	1-1	Are models for outdoor and indoor units matched respectively? (Ex: Are multiple indoor units connected to commercial outdoor units?)	Yes	2-1
			No	Replace indoor units.
2 Installation Failure	2-1	Check the indoor unit's motor valve with the remote control detailed settings mode (2C code) and commercial indoor unit is set to "2" and multiple indoor unit is "0".	Yes	3-1
			No	Change installation.
3 Operating Wires for Indoor & Outdoor Units	3-1	Check whether or not indoor and outdoor unit operating wires are short circuit, disconnection, loose connection or earth fault.		

5

L18 4-way Valve Operation Failure

1. Error Detection Method

It is judged an error when during heating operation (Comp. ON), the highest detected temperature at an outdoor unit heat exchanger (C1) was 20°C or more above the outdoor air temperature (Air Temp.) continuously for 5 minutes or longer.

2. Error Diagnosis

1 PC board wiring	1-1	Is the connector wired from the 4-WAY valve plugged in the CN-20S connector on the HIC PC board properly?	Yes	1-2
			No	Correct connector
	1-2	Has the 4-way valve wiring become opened?	Yes	Correct wiring
			No	1-3
	1-3	Is the wire from the coil for controlling the 4-way valve firmly connected to the 4-way valve?	Yes	2-1
			No	Correct connector
2 4-way valve	2-1	During heating mode (Comp. ON), insert and remove the connector wired from the 4-WAY valve into or from CN-20S connector on the HIC PC board. At the same time, does the ON & OFF sounds occur from the 4-way valve?	Yes	2-2
			No	Replace HIC PC board
	2-2	During heating mode (Comp. ON), does the alarm code L18 reproduce for 5 minutes or longer after insertion and removal of CN-20S connector wired from the 4-way valve connector on the HIC PC board?	Yes	2-3
			No	See what happens
	2-3	The parts inside the 4-way valve might have fixed at the cooling side. Replace the 4-way valve		

P03 Compressor Discharge Temperature Trouble

1. Error Detection Method

- When the discharge temperature is over 106°C.

2. Error Diagnosis

1 Adjustment to refrigerant charge	1-1	Not additional refrigerant charged	Yes	Additional refrigerant charge
			No	2-2
	1-2	Tends to have insufficient refrigerant charge in the system.	Yes	Adjust the refrigerant amount
			No	Replace CR board
2 Blockage in refrigerant circuit	2-1	Service valve inside the outdoor unit closed	Yes	Open service valve
			No	2-2
	2-2	Are the tubes clogged?	Yes	Avoid clogging
			No	2-3
	2-3	Is the outdoor unit's electronic control valve operating correctly? (Check for debris clogging the electronic control valve, a problem with the electronical coil and/or the control PC board.)	Yes	2-4
			No	Replace the electronic control valve
	2-4	Is it observable difference in status of the dew or frost between the strainer's primary and secondary sides?	Yes	Replace the strainer
			No	Replace CR board

P04 High Pressure Trouble

1. Error Detection Method

It is judged an error if the internal circuit of the high pressure switch is dead.
The electronic circuitry of the high pressure switch is cut off if the pressure at the pressure sensor port of the high pressure switch reaches 3.80 MPa. Once it is cut off, it remains cut off until the pressure drops to 3.15 MPa.

- The high pressure switch is malfunctioning.
- Service valve inside the outdoor unit closed
- There is a short air circuit through the outdoor unit's heat exchanger. (when cooling)
- The outdoor unit's fan is broken. (when cooling)
- The outdoor unit's heat exchanger is clogged. (when cooling)
- There is a short air circuit at the indoor unit. (when heating)
- The filter of the indoor unit is clogged. (when heating)
- The fan of the indoor unit is broken or the fan motor is malfunctioning. (when heating)
- The refrigerant circuit is closed and the high pressure is increasing abnormally high. (solenoid valve or expansion valve not activated, a stuck check valve, etc.)
- Refrigerant overcharged.
- Nitrogen or air contaminated in the refrigerant system

2. Error Diagnosis

1 High pressure switch	1-1	The socket of the high pressure switch is securely inserted in the PC board. The wiring is not opened.	Yes	1-2
			No	Correct connection and/or wiring
	1-2	Even if parts near the high pressure switch are shaken quite a lot, the high pressure cutoff will be activated. Even if the covering is in good condition, in several cases vibration has caused wiring inside to open.	Yes	Replace the high pressure switch (wiring)
			No	2-1
2 Service valve	2-1	Service valve inside the outdoor unit closed	Yes	Open the service valve
			No	2-2
	2-2	There is an extreme difference in temperature in/out of the service valve.	Yes	2-3
			No	3-1
	2-3	Check the flare connection, someone may have forgotten to remove the bonnet. If there is a problem within the service valve, replace the valve.		
3 Problem around the heat exchanger	3-1	While cooling is operating an alarm is occurred.	Yes	3-2
			No	3-5
	3-2	The intake temperature (ambient temperature) of the outdoor unit's heat exchanger is above 46°C.	Yes	Prevent air short circuit
			No	3-3
	3-3	The outdoor unit's heat exchanger is clogged.	Yes	Clean the heat exchanger
			No	3-4
	3-4	Check whether the outdoor unit fan is normal or if the sockets are firmly pressed onto the plugs on the outdoor PC board, as well as if any wiring is opened. Are these checking finished without fail?	Yes	4-1
			No	Replace the outdoor unit fan. Correct connection and/or wiring
	3-5	While heating is operating an alarm is occurred.	Yes	3-6
			No	4-1

3 Problem around the heat exchanger	3-6	The intake temperature (ambient temperature) of the indoor unit is above 36°C.	Yes	Prevent air short circuit
			No	3-7
	3-7	The filter of the indoor unit is clogged.	Yes	Clean the filter
			No	3-8
	3-8	The fan of the indoor unit is broken or the fan motor is faulty.	Yes	Replace the indoor fan (motor)
			No	4-1
4 Blockage in the refrigerant circuit	4-1	Is the outdoor unit's electronic control valve operating correctly? (Check for debris clogging the electronic control valve, a problem with the electronical coil and/or the control PC board.)	Yes	4-3
			No	Repair the electronic control valve of the outdoor unit
	4-2	The indoor unit's expansion valve is operating correctly. (check for debris clogging the valve, a problem with the electronical coil and/or the control PC board)	Yes	4-3
			No	Repair the expansion valve of the indoor unit
	4-3	If an alarm is occurred with the high pressure below 3.80 MPa, with the pressure measured as displayed by the manifold gauge, check the check valve in the compressor discharge line. Are these checking finished without fail?	Yes	4-4
			No	Replace the check valve in the compressor discharge line
	4-4	The electronic control valve is faulty. In systems where the solenoid valve kits and the ice thermal storage tank are connected, check these solenoid valves.	Yes	Replace the electronic control valve and/or solenoid valve.
			No	5-1
5 Overcharging	5-1	Error occurs when the system is operating in cooling mode.	Yes	5-3
			No	5-2
	5-2	Error occurs when the system is operating in heating mode.	Yes	5-4
			No	5-5
	5-3	An alarm is occurred with the high pressure at 3.80 MPa, with the pressure measured either as displayed by the monitoring software or with a manifold gauge, at which time the temperature of liquid in the outdoor unit's heat exchanger is detected to be at the temperature of the outside air.	Yes	5-5
			No	Contact the service representative
	5-4	An alarm is occurred with the high pressure at 3.80 MPa, with the pressure measured either as displayed by the monitoring software or with a manifold gauge, at which time the temperature of liquid in the indoor heat exchanger is detected to be at room temperature (intake temperature).	Yes	5-5
			No	Contact the service representative
	5-5	The system may be overcharged. Check how much refrigerant was added during installation. When a system is inspected for airtightness, it is seldom that enough nitrogen has been expelled, so some remains in the circuit. In this case, it is necessary to collect the refrigerant and then recharge the system.		

5

P05 AC Power Supply Trouble

1. Error Detection Method

- Instantaneous blackout
- Zero-cross (waveform input of power supply) error
- DC voltage charge failure

2. Error Diagnosis

Note : The work involved in diagnosing each of the items is extremely dangerous, so turn the power off at the breaker before performing the tests.

1 Check the power supply & the wiring	1-1	Is the voltage on each of the terminal boards within ±10□ of the rated voltage?	Yes	1-4 : Single-phase model 1-2 : 3-phase model
			No	Check for open circuit and the voltage at the breaker. if a problem is found, fix it and check again.
	1-2	Power wiring N-phase is connected.	Yes	Correct wiring
			No	1-3
	1-3	Power wiring L2 and N are reverse connected. (3-phase only)	Yes	Correct wiring
			No	1-4
	1-4	Turn the power back on and check again. Is the alarm triggered again?	Yes	3-1 : Single-phase model 2-1 : 3-phase model
			No	4-1
2 Check the outdoor unit CR PC board	2-1	The connector CN-PRY2 on the outdoor CR PC board is connected properly (locked). (3-phase only)	Yes	3-1
			No	Correct wiring (connector)
3 Check the outdoor unit HIC PC board	3-1	Are the wires (RE1, RE2) from the reactor firmly installed?	Yes	3-2
			No	Correct wiring
	3-2	Turn the power back on and check again. Is the alarm triggered again?	Yes	Replace the outdoor unit HIC PC board.
			No	4-1
4 Final check	4-1	There may be a instantaneous blackout failure. If there is nothing abnormal, see what happens.		

Single-phase outdoor unit HIC PC board

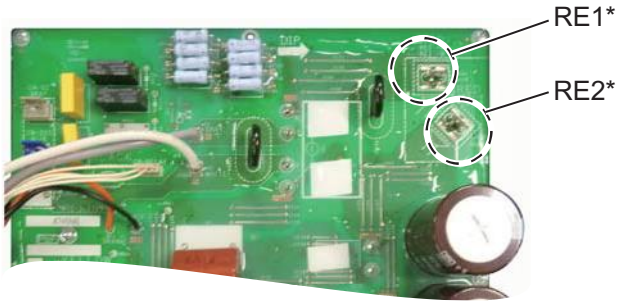

* Common in RE1 and RE2
4hp : Plug-in type
5hp, 6hp : Fastening screw type

3-phase outdoor unit HIC PC board

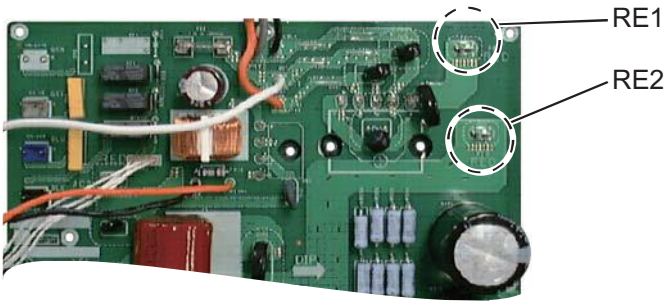

(for 3-phase outdoor unit CR PC board)

P13 Alarm Valve Open

1. Error Detection Method

Detection is performed only in the test run. When once detected or the test run finished without any error, the second detection will not be done.
In case of forgetting to open a valve, P04 (high-pressure switch operational alarm) is occasionally preceded due to the following conditions.

- The status of small temperature change of the operating indoor unit continues for the first 7 minutes since the cooling test run has started.

2. Error Diagnosis

1 Service valve	1-1	Service valve inside the outdoor unit closed	Yes	Open the service valve
			No	2-1
2 Adjustment to refrigerant change	2-1	Not additional refrigerant charged	Yes	Additional refrigerant charge
			No	3-1
3 Blockage in refrigerant circuit	3-1	Are the tubes clogged?	Yes	Avoid clogging
			No	3-2
	3-2	Is the outdoor unit's electronic control valve operating correctly? (Check for debris clogging the electronic control valve, a problem with the electronical coil and/or the control PC board.)	Yes	3-3
			No	Replace the electronic control valve
	3-3	As the second detection is not done, restart and see what happens if there is no error.		

5

P14 O_2 Sensor Detect

1. Error Detection Method

- It is judged an error whenever the outdoor unit receives the signal "O_2 Alarm Occurred" from the indoor unit.
- With the indoor unit's EEPROM setting (item code 0B) set to 0001, the EXCT input was shorted.

2. Error Diagnosis

1 System configuration	1-1	Is an O_2 sensor being used?	Yes	3-1
			No	2-1
2 Indoor unit's EEPROM setting	2-1	Is the indoor EEPROM setting, item code 0B, on the indoor unit's control PC board set to 0001?	Yes	After correcting the setting, 3-1
			No	4-1
3 Indoor EXCT wiring	3-1	Is the indoor EXCT socket (wire) shorted?	Yes	Correct wiring
			No	4-1
4 Indoor unit's control PC board	4-1	Is the alarm triggered if the indoor EXCT socket (wire) is disconnected, and the power is reset?	Yes	4-3
			No	4-2
	4-2	Since there is no error, see what happens.		
	4-3	Indoor unit control PC board error → replace PC board.		

5

P15 Insufficient Gas Level Detected

1. Abnormal Detection Method

Alarm occurs in the following cases:

- Compressor's current value shows lower than a certain value.
- Compressor's discharge temperature exceeds 95°C.
- Electronic expansion valve is fully opened.
- The difference between indoor unit heat exchanger temperature and intake temperature is less than 4K.

2. Error Diagnosis

1 Adjustment of refrigerant amount	1-1	Insufficient gas level (Check whether or not pressure level is normal.)	Yes	Recharge with additional refrigerant.
			No	1-2
	1-2	Check leakage of refrigeration (leak test)	Yes	Replace leaking part with a new one.
			No	See what happens.

5

P16 Compressor Overcurrent Trouble

1. Meaning of Alarm

- Secondary current effective value detected the overcurrent (trip current value).
  Single-phase model (2.5hp □3hp) : Trip current = 23.0 A 3-phase model (4hp □6hp) : Trip current = 17.0 A
  Single-phase model (4hp □6hp) : Trip current = 27.0 A
- Secondary current instantly detected overcurrent (trip current value).
  Single-phase model (2.5hp □3hp) : Trip current = 28.0 A_{peak} 3-phase model (4hp □6hp) : Trip current = 27.0 A_{peak}
  Single-phase model (4hp □6hp) : Trip current = 45.0 A_{peak}

2. Check of content

0 Multiple factors	0-1	Replaced the compressor (added oil, if it was necessary) but it occurred again immediately.	Yes	7-1
			No	-
	0-2	Replaced the board, but it occurred again immediately.	Yes	Replace compressor along with adding oil, then recheck from 1-1
			No	-
1 Power Source	1-1	Power cord connections are loose.	Yes	Correct the wiring
			No	1-2
	1-2	Rated power voltage is not within ±10□.	Yes	Test the power supply
			No	1-3
	1-3	Extreme fluctuations in voltage.	Yes	Test the power supply
			No	1-4
	1-4	An open phase state is observed.	Yes	Test the power supply
			No	2-1
2 Board wiring	2-1	Disconnected parts, miswiring and/or poor connections (loose) are observed in the connections on the CR board and/or in the connections of components that are connected by wiring from the CR board.	Yes	Correct
			No	2-2
	2-2	Disconnected parts, miswiring and/or poor connections (loose) are observed in the connections of outdoor board(s) that are connected by wiring from the CR board.	Yes	Correct
			No	2-3
	2-3	Disconnected parts, miswiring and/or poor connections (loose) are observed in the connections of outdoor board(s) that are connected by wiring from the HIC board.	Yes	Correct
			No	2-4
	2-4	Disconnected parts, miswiring and/or poor connections (loose) are observed in the connections of HIC boards connected by wiring from the CR board.	Yes	Correct
			No	2-5
	2-5	Disconnected parts, miswiring and/or poor connections (loose) are observed in the connections of HIC board(s) that are connected by wiring from the outdoor board.	Yes	Correct
			No	2-6
	2-6	Disconnected parts, miswiring and/or poor connections (loose) are observed in the connections of HIC board(s) that are connected by wiring to a compressor.	Yes	Correct
			No	3-1
3 Compressor wiring	3-1	Disconnections and/or miswiring are observed in the connecting location of the compressor terminals.	Yes	Correct
			No	3-2
	3-2	Conditions such as burned terminal covers and/or discolored terminals are observed in the connecting location of the compressor terminals.	Yes	Eliminate looseness by changing the terminals, or crimping the terminals again.
			No	4-1

4 Check the situation	4-1	Outdoor air intake temperature is high.	Yes	Take measures
			No	4-2
	4-2	May be caused by poor outdoor unit air flow (dirty or clogged heat exchanger, blocked discharge port, etc.)	Yes	Correct
			No	4-3
	4-3	Air short circuit has occurred. This is a phenomenon when discharged air (exhaust heat) from the outdoor unit is drawn back into the suction vent.	Yes	Prevent air short circuit
			No	4-4
	4-4	Indoor air intake temperature is high.	Yes	Take measures
			No	4-5
	4-5	The filter of the indoor unit is clogged.	Yes	Clean the filter
			No	4-6
	4-6	Air short circuit has occurred. This is a phenomenon when discharged air (exhaust heat) from the indoor unit is drawn back into the suction vent.	Yes	Prevent air short circuit
			No	5-1
5 Check operation	5-1	Possible to operate.	Yes	5-2
			No	6-1
	5-2	Operating pressure is affected by pressure overload.	Yes	5-3
			No	5-4
	5-3	Tends to have an overcharge of refrigerant in the system.	Yes	Adjust the amount of refrigerant
			No	5-4
	5-4	Tends to operate for a long time turning gas back into liquid.	Yes	Check the operation of functional parts
			No	5-5
	5-5	Tends to have insufficient refrigerant charge in the system.	Yes	Adjust the amount of refrigerant
			No	5-6
	5-6	Even though the high pressure saturation temperature is 43°C or less, the secondary current of the inverter is high. (The frequency (Hz) ends up dropping due to the current.)	Yes	Replace the compressor
			No	See what happens.
6 Check history	6-1	Dividing the outdoor EEPROM INV operation time by the number of times oil was supplied to the system yields 3 hours or less.	Yes	6-2
			No	6-2
	6-2	There is a history of H31 in the pre-trip counter of the outdoor EEPROM alarm history.	Yes	Replace the compressor and add oil. However if 6-1 was “no,” it is not necessary to add oil.
			No	7-1
7 Check the HIC boards	7-1	The results of HIC board IPM Pass/Fail Tests show the outside the range of the resistance of a conforming part listed in the next page.	Yes	Replace HIC board
			No	8-1
8 Check the compressor	8-1	The compressor is causing a failure in the insulation.	Yes	Replace the compressor
			No	8-2
	8-2	The winding resistance of the compressor is abnormal. Standard winding resistance — hp: horse power Single-phase model (2.5hp □3hp): U-V : 0.720 ohm; U-W : 0.726 ohm; V-W : 0.708 ohm Single-phase model (4hp □6hp): U-V : 0.490 ohm; U-W : 0.495 ohm; V-W : 0.483 ohm 3-phase model: U-V : 1.061 ohm; U-W : 1.079 ohm; V-W : 1.050 ohm	Yes	Replace the compressor
			No	9-1

5

9 Check the HIC PC boards	9-1	Replace the HIC PC board and operate the unit. (Apply putty and screws must not be loose) Does it operate normally?	Yes	See what happens.
			No	10-1
10 Check the outdoor unit main PC board	10-1	Replace the control PC board and operate the unit.	See what happens.	

- (Check content of 7) The test check of the HIC board is only a check on the output level, so the input stage may not be working.
- With the filter board broken, alarm P16 may not be triggered.

● HIC board IPM Pass/Fail Tests

- Measure with an analog tester. (Set to the k ohm range.)
- Measure the board by itself. (Remove wires connected from other parts.)
- Measure using IPM terminals.

★ Conforming part resistance value (measure with an analog tester)

Tester terminals								
+	P				NU			
-	U	V	W	NU	U	V	W	P
Resistance value (ohm)	1 k to 5 k	1 k to 5 k	1 k to 5 k	5 k to 10 k	100 k to ∞	100 k to ∞	100 k to ∞	100 k to ∞

Tester terminals								
-	P				NU			
+	U	V	W		U	V	W	
Resistance value (ohm)	100 k to ∞	100 k to ∞	100 k to ∞		1 k to 5 k	1 k to 5 k	1 k to 5 k	

- Excepting the parts of " 100 k to ∞ ", it is acceptable if a small resistance value appears as a reference value unless the value is "0 = short-circuit".

Tester terminals								
+	HIC+				HIC-			
-	U	V	W	HIC-	U	V	W	HIC+
Resistance value (ohm)	1 k to 10 k	1 k to 10 k	1 k to 10 k	5 k to 20 k	20 k to ∞	20 k to ∞	20 k to ∞	20 k to ∞

Tester terminals								
-	HIC+				HIC-			
+	U	V	W		U	V	W	
Resistance value (ohm)	20 k to ∞	20 k to ∞	20 k to ∞		1 k to 10 k	1 k to 10 k	1 k to 10 k	

- Excepting the parts of "20 k to ∞ ", it is acceptable if a small resistance value appears as a reference value unless the value is "0 = short-circuit".

■ Outdoor Unit Control PCB

CR-50PE1E5 : bottom (U-50PE1E5)
(for single-phase outdoor unit PCB)

■ Outdoor Unit Control HIC PCB

A746895 : (U-60PE1E5A, U-71PE1E5A)
(for single-phase outdoor unit HIC PCB)

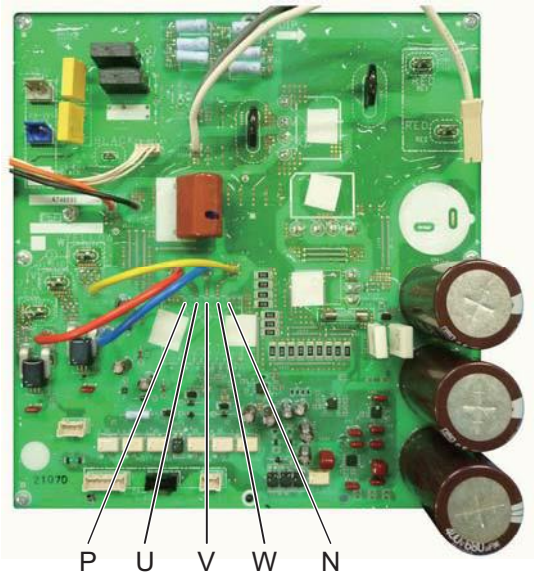

■ Outdoor Unit Control HIC PCB

A746846 : (U-100PE1E5A)
(for single-phase outdoor unit HIC PCB)

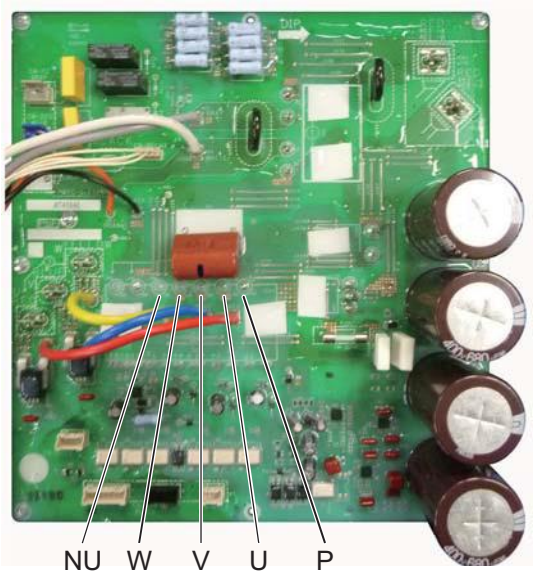

A746847 : (U-125PE1E5A, U-140PE1E5A)
(for single-phase outdoor unit HIC PCB)

5

■ Outdoor Unit Control PCB

CR-60PEY1E5 : bottom (U-60PEY1E5)
(for single-phase outdoor unit PCB)

CR-71PEY1E5 : bottom (U-71PEY1E5)
(for single-phase outdoor unit PCB)

■ Outdoor Unit Control HIC PCB

A746846 : (U-100PEY1E5)
(for single-phase outdoor unit HIC PCB)

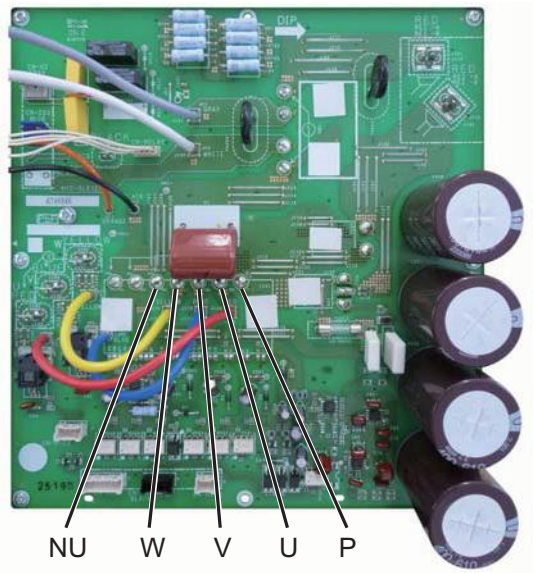

A746847 : (U-125PEY1E5)
(for single-phase outdoor unit HIC PCB)

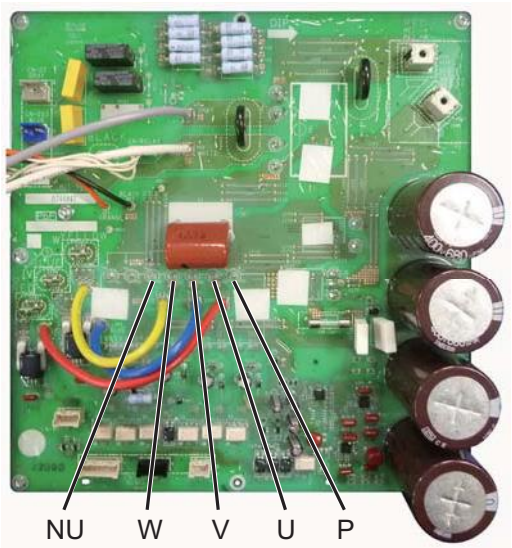

■ Outdoor Unit Control HIC PCB

A746970 : (U-71PE1E8A)
A746969 : (U-100PE1E8A, U-125PE1E8A,
U-140PE1E8A, U-140PEY1E8)
(for 3-phase outdoor unit HIC PCB)

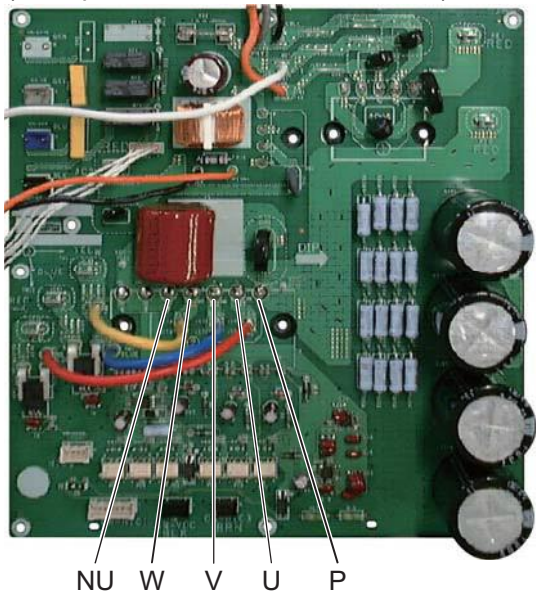

A747248 : (U-100PEY1E8, U-125PEY1E8)
(for 3-phase outdoor unit HIC PCB)

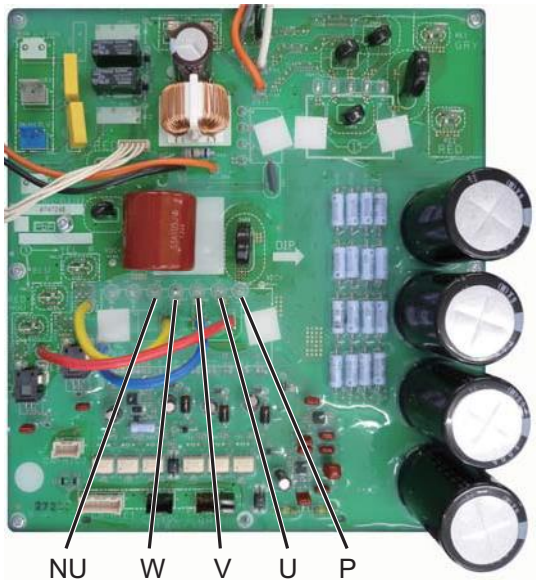

5

P22 Outdoor Unit Fan Motor Trouble

1. Error Detection Method

- It is judged an error when the outdoor fan motor's rotating signal cannot be detected normally.

2. Error Diagnosis

1 Wiring	1-1	Are the connectors "CN-FMA", "CN-FMB", "CN-FM1", and "CN-FM2" firmly connected to the outdoor control PC board (lock engaged)?	Yes	2-1
			No	Correct the connector connections
2 Outdoor fan motor	2-1	Disconnect the connectors "CN-FMA", "CN-FMB", "CN-FM1", and "CN-FM2" from the outdoor control PC board and rotate the outdoor fan by hand; does it rotate freely? (Check the outdoor fan motor lock)	Yes	3-1
			No	Replace the outdoor fan motor
3 Outdoor control PC board	3-1	Turn the power on and run the unit again; is P22 triggered again? Or can you see or hear anything that is obviously wrong in its rotation?	Yes	3-2
			No	3-3
	3-2	Replace the outdoor control PC board. (If it fails to operate normally even after replacing the outdoor control PC board, replace the outdoor fan motor.)		
	3-3	If there is nothing particularly out of the ordinary, see what happens.		

P29 Lack of INV compressor wiring, INV compressor actuation failure (including locked), DCCT failure

1. Error Detection Method

- Abnormal current is detected at DCCT before start-up.
- Start-up failed during overcurrent and/or step-out detected.
- Open-wire of compressor and/or backspin detected.
- Secondary current is not detected during INV compressor is running.

2. Error Diagnosis

1 Wiring	1-1	Disconnected parts, miswiring and/or poor connections (loose) are observed in the connections of HIC PC board(s) that are connected by wiring to a compressor. *1	Yes	Correct wiring connections
			No	1-2
	1-2	Disconnected parts, miswiring and/or poor connections (loose) are observed in the connections of outdoor board(s) that are connected by wiring from the HIC PC board. *1	Yes	Correct wiring connections
			No	2-1
2 Compressor wiring	2-1	Disconnections and/or miswiring is observed in the connections of the compressor terminals. *1	Yes	Correct
			No	2-2
	2-2	Conditions such as burned terminal covers and/or discolored terminals are observed at the connectors of the compressor terminals. *1	Yes	Eliminate looseness by changing the terminals, or crimping the terminals again.
			No	3-1
3 Check the HIC PC boards	3-1	The results of the pass/fail tests for the following HIC PC board IPM show it to be outside the range of the resistance of a conforming part.	Yes	Replace the HIC board
			No	3-2
	3-2	Replace the HIC PC board and operate the unit. (Apply putty and screws must not be loose) Does it operate normally?	Yes	See what happens.
			No	4-1
4 Check the outdoor control PC board	4-1	Replace the control PC board and operate the unit.	See what happens.	

*1 Checking for looseness of compressor terminals by wiggling them has the adverse effect of loosening them, so do not do it. Evaluate them by discoloration of wire insulation near the terminal.

● HIC board IPM Pass/Fail Tests

- Measure with an analog tester. (Set to the k ohm range)
- Measure the board by itself. (Remove wires connected from other parts.)
- Measure using IPM terminals.

★ Conforming part resistance value (measure with an analog tester)

Tester terminals								
+	P				NU			
-	U	V	W	NU	U	V	W	P
Resistance value (ohm)	1 k to 5 k	1 k to 5 k	1 k to 5 k	5 k to 10 k	100 k to ∞	100 k to ∞	100 k to ∞	100 k to ∞

Tester terminals								
-	P				NU			
+	U	V	W		U	V	W	
Resistance value (ohm)	100 k to ∞	100 k to ∞	100 k to ∞		1 k to 5 k	1 k to 5 k	1 k to 5 k	

- Excepting the parts of " 100 k to ∞ ", it is acceptable if a small resistance value appears as a reference value unless the value is "0 = short-circuit".

Tester terminals								
+	HIC+				HIC-			
-	U	V	W	HIC-	U	V	W	HIC+
Resistance value (ohm)	1 k to 10 k	1 k to 10 k	1 k to 10 k	5 k to 20 k	20 k to ∞	20 k to ∞	20 k to ∞	20 k to ∞

Tester terminals								
-	HIC+				HIC-			
+	U	V	W		U	V	W	
Resistance value (ohm)	20 k to ∞	20 k to ∞	20 k to ∞		1 k to 10 k	1 k to 10 k	1 k to 10 k	

- Excepting the parts of " 20 k to ∞ ", it is acceptable if a small resistance value appears as a reference value unless the value is "0 = short-circuit".

P31 Group Control Error

1. Error Detection Method

- Other indoor unit alarms within the group.

1 Other indoor unit	1-1	Survey the indoor unit that alarms other than “P31” in the indoor unit group and specify the causes of failure.

■ Outdoor Unit Control PCB

CR-50PE1E5 : bottom (U-50PE1E5)
(for single-phase outdoor unit PCB)

■ Outdoor Unit Control HIC PCB

A746895 : (U-60PE1E5A, U-71PE1E5A)
(for single-phase outdoor unit HIC PCB)

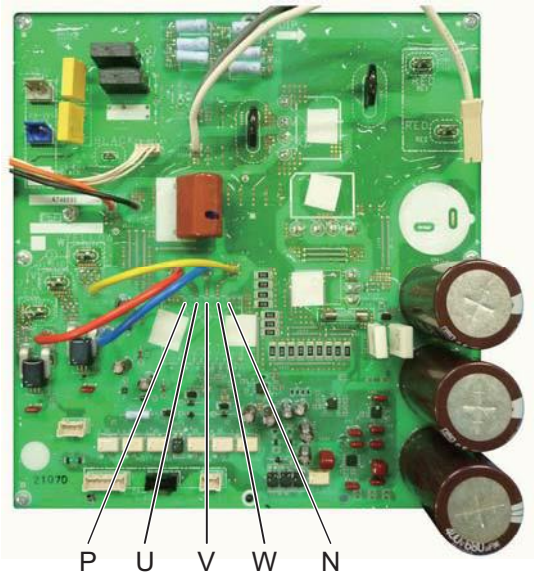

■ Outdoor Unit Control HIC PCB

A746846 : (U-100PE1E5A)
(for single-phase outdoor unit HIC PCB)

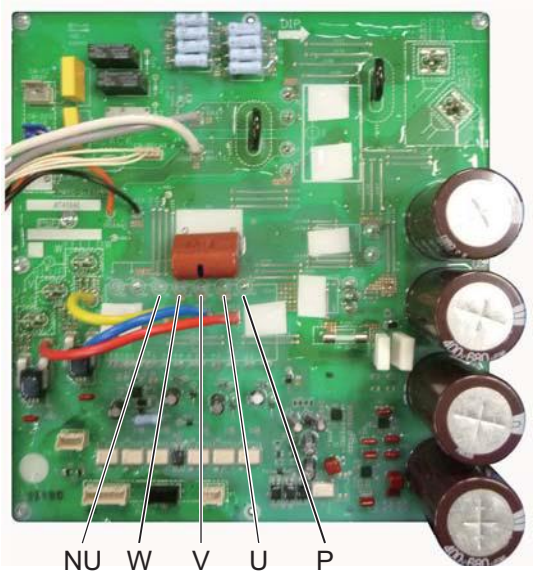

A746847 : (U-125PE1E5A, U-140PE1E5A)
(for single-phase outdoor unit HIC PCB)

5

■ Outdoor Unit Control PCB

CR-60PEY1E5 : bottom (U-60PEY1E5)
(for single-phase outdoor unit PCB)

CR-71PEY1E5 : bottom (U-71PEY1E5)
(for single-phase outdoor unit PCB)

■ Outdoor Unit Control HIC PCB

A746846 : (U-100PEY1E5)
(for single-phase outdoor unit HIC PCB)

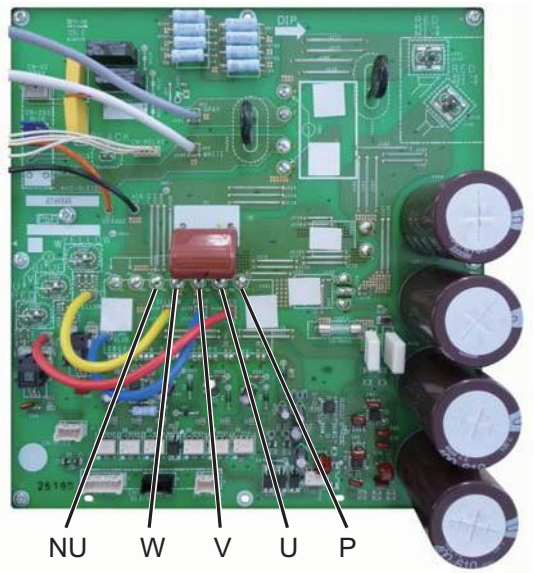

A746847 : (U-125PEY1E5)
(for single-phase outdoor unit HIC PCB)

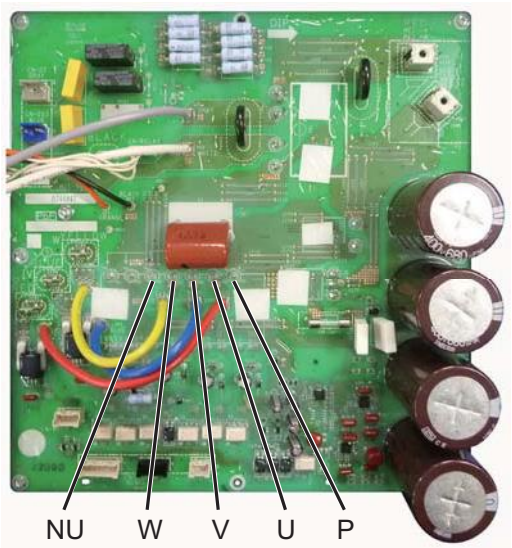

■ Outdoor Unit Control HIC PCB

A746970 : (U-71PE1E8A)
A746969 : (U-100PE1E8A, U-125PE1E8A,
U-140PE1E8A, U-140PEY1E8)
(for 3-phase outdoor unit HIC PCB)

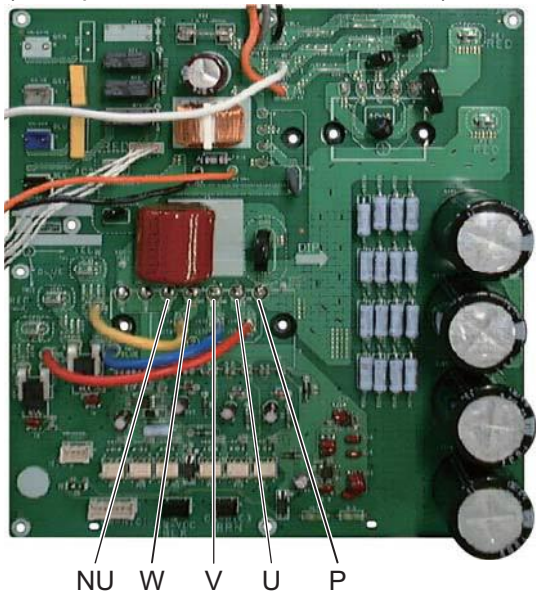

A747248 : (U-100PEY1E8, U-125PEY1E8)
(for 3-phase outdoor unit HIC PCB)

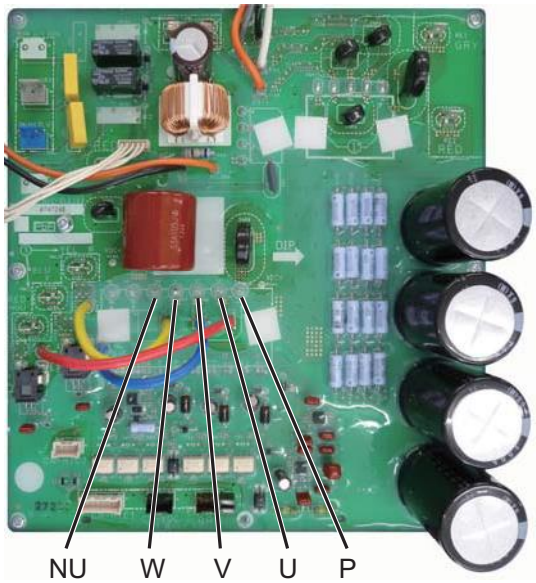

5

5-4. Inspection of Parts (Outdoor Unit)

(1) Electronic control valve (MOV1)

- MOV1: Measure the voltage between plug pin 5 and pins 1 through 4 at the CN-MOV1 connector (5P, white) on the outdoor unit control PCB. (Because of the pulse output, a simplified measurement method is used. Set the tester to the 12 V range; if the value displayed is approximately 4 V, then the voltage is normal.)

  If the voltage is normal, measure the resistance between connector pin 5 and pins 1 through 4.

  Resistance between pin 5 and pins 1 through 4 should be approximately 46 Ω for all. (If the result is 0 Ω or, ∞ then replace the coil.)

5-5. Symptom: Thermostat in OFF continues or cycles OFF & ON too frequently

1. How to detect abnormality
   - Abnormality does not occur. Protective function can be checked when the outdoor maintenance remote controller is connected.

2. Error Diagnosis

1 Indoor control PC board	1-1	Setting temperature reaches the level set ON thermostat. Setting temperature is too low in heating mode and too high in cooling and dry mode.	Yes	Adjust setting temperature
			No	1-2
	1-2	Check if the sensors are connected correctly. Are all connection made properly? Room temp. (TA) in yellow, heat exchanger (E1) in red, heat exchanger (E2) in black, heat exchanger (E3) in brown, air outlet (BL) in green	Yes	Connect correctly
			No	1-3
	1-3	DISP (display mode) is applied.	Yes	Turn OFF(OPEN)
			No	1-4
	1-4	With a thermostat OFF in heating mode, wind speed (item code 05) is out of range 0 - 6. (Use Simple Setting Function on standard timer remote controller.)	Yes	Choose one of 0 to 6
			No	1-5
	1-5	DEMAND is applied.	Yes	Turn OFF(OPEN)
			No	2-1
2 Outdoor control PC board	2-1	Outdoor unit and protective function of a system are operating. (Connect outdoor maintenance remote controller to RC socket on outdoor unit main control PC board and check alarm messages.)	Yes	See operational status
			No	2-2
	2-2	Discharge temperature is over 80°C in stop mode and does not decrease. (Connect outdoor maintenance remote controller to RC socket on outdoor unit main control PC board and check alarm messages.)	Yes	Replace discharge temperature sensor
			No	2-3
	2-3	Demand value always stays low. (The value is lower than 70. Excluding -1 (unlimited))(Connect outdoor maintenance remote controller to RC socket on outdoor unit main control PC board and check alarm messages.)	Yes	Increase values (over 70)
			No	2-4
	2-4	DEMAND is applied.	Yes	Turn OFF(OPEN)
			No	3-1
3 Control equipment	3-1	Demand setting is made by control units (P-AIMS, Seri-Para I/O unit for outdoor unit, Seri-Para I/O each indoor unit.)	Yes	Turn OFF
			No	4-1
4 System	4-1	When operating in cooling (including auto cooling & heating) and dry mode, lowest temp. of indoor E1, E2 and E3 sensor is less than 2°C (under anti-freeze control).	Yes	Wait until more than 2°C reaches
			No	4-2
	4-2	During defrosting operation	Yes	Wait for a few minutes to 10 minutes or so
			No	4-3
	4-3	Outdoor unit PC board failure → Replacement		

- According to a type of model, the indoor sensors will not be supplied in some cases.
- According to a type of model, the outdoor DEMAND will not be supplied in some cases.
- When LINE Checker is used, the temperature sensors can be observed (display, record) simultaneously.
- According to some areas, some of the models are unreleased.

5-6. How to Clean Heat Exchanger

1. Turn off the power supply.

   WARNING

   ELECTRICAL SHOCK CAN CAUSE
   SEVERE PERSONAL IN□URY OR DEATH.

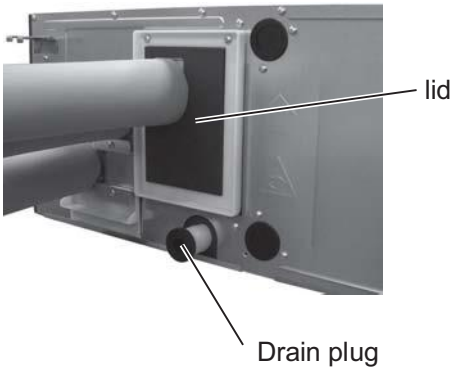

Fig. 1

2. Remove the lid (drain pump). (Fig. 1)

3. Remove the drain plug and drain the water from the drain pan. (Fig. 1)

4. Insert a high pressure cleaner from the opening (Fig. 2a) and clean the heat exchanger. (Fig. 2b)

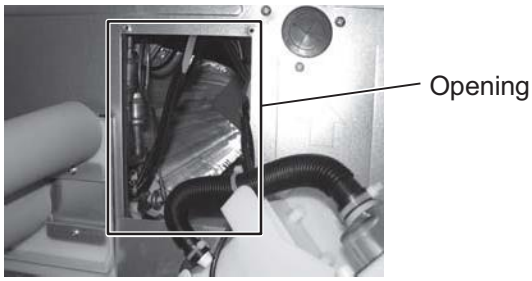

Fig. 2a

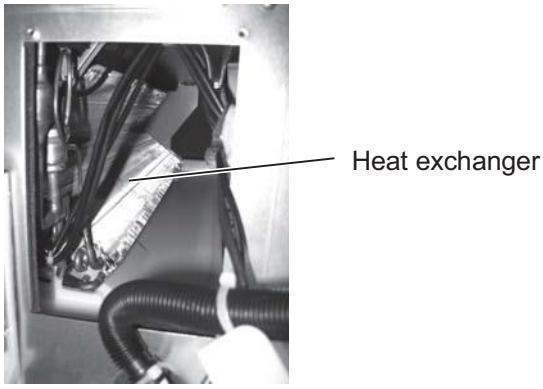

Fig. 2b

5. When finished cleaning, install the drain plug and lid (drain pump).

5-7. How to Replace Fan Motor

Removing Fan Motor

1. Turn off the power supply.

   WARNING

   ELECTRICAL SHOCK CAN CAUSE
   SEVERE PERSONAL IN□URY OR DEATH.

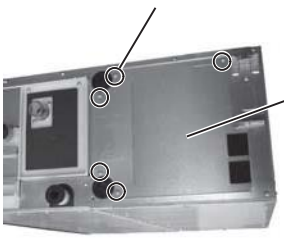

Fig. 1

2. Remove the lid of the electrical component box.
   (Screws x 5 locations: Fig. 1)
   Make sure the PC board should not be electrified.
   Power supply LED should be lit off on PC board.
   (Fig. 2)

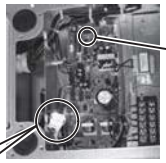

Fig. 2

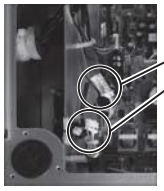

Fig. 3

3. Disconnect the interconnector in the middle of the wiring to the fan motor. (Fig. 3)

4. Remove the bottom plate. (Fig. 4)

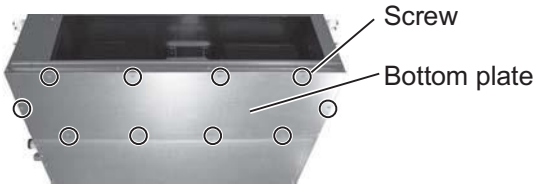

Fig. 4

5. Disconnect two (2) clutches (Fig. 5a) fixing the lower side of the fan casing and pull out the protrusion part (Fig. 5c) placed onto the side of the main unit (Fig. 5b). Then remove the fan casing.

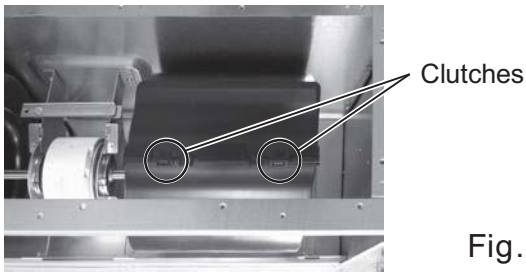

Fig. 5a

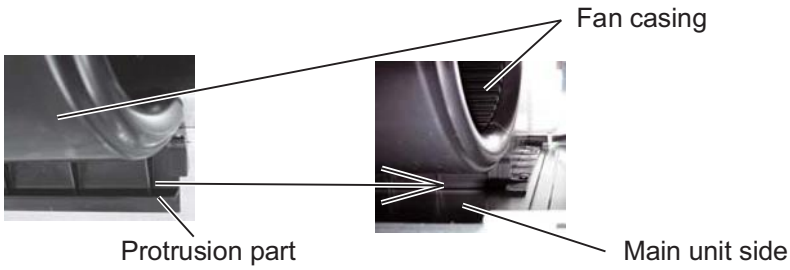

Fig. 5c Fig. 5b

6. Remove the screws (M6 x2 locations: Fig. 6) fixing the fan motor.
   It is recommended that a nutdriver (8mm) be used.

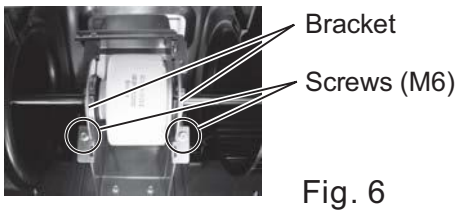

Fig. 6

7. Remove the bracket (Fig. 6) and then remove the fan and fan motor (Fig. 7).

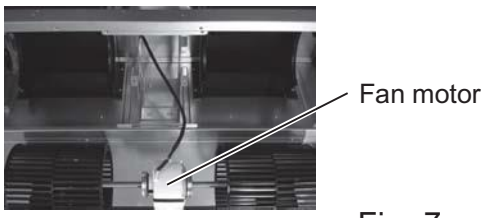

Fig. 7

8. Loosen the fixed screw with a hexagon wrench (3mm, over 100mm in length) and remove the fan.

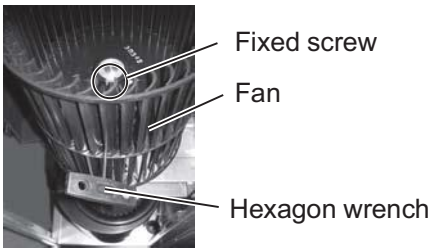

Fig. 8

9. Remove the rubber attached to the wiring of the fan motor (Fig. 9).

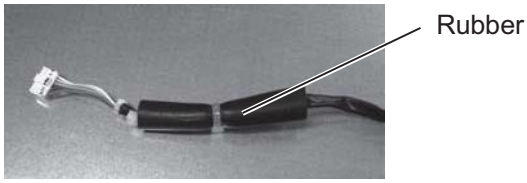

Fig. 9

Installing Fan Motor

1. For installation, reverse the procedure above.
2. Fine tune so that the fan can be positioned in the center of the fan casing.

6. OUTDOOR UNIT MAINTENANCE REMOTE CONTROL

6-1. Overview 6-2
6-2. Functions 6-2
6-3. Normal Display Operations and Functions 6-3
6-4. Monitoring Operations: Display of Indoor Unit and Outdoor Unit Sensor Temperatures 6-6
6-5. Monitoring the Outdoor Unit Alarm History: Display of Outdoor Unit Alarm History 6-7
6-6. Settings Modes: Setting the Outdoor Unit EEPROM 6-7

6-1. Overview

What is the outdoor unit maintenance remote controller?

Beginning with the DC-INV series of outdoor units, nonvolatile memory (EEPROM) is used in the outdoor unit PCB. In this way, the setting switches that were located on earlier PCBs have been converted to EEPROM data. This remote controller is an outdoor unit maintenance tool that is used to make and change the EEPROM settings. This remote controller can be used for checking the outdoor unit EEPROM settings and contents, and also can be used to monitor the outdoor unit alarm history and indoor/outdoor unit temperatures, and to check the status of the indoor unit connections (No. of units, operating status, etc.).

Note: It is used only during test runs and servicing because this tool does not function as a remote controller.

CZ-RTC2

System diagram

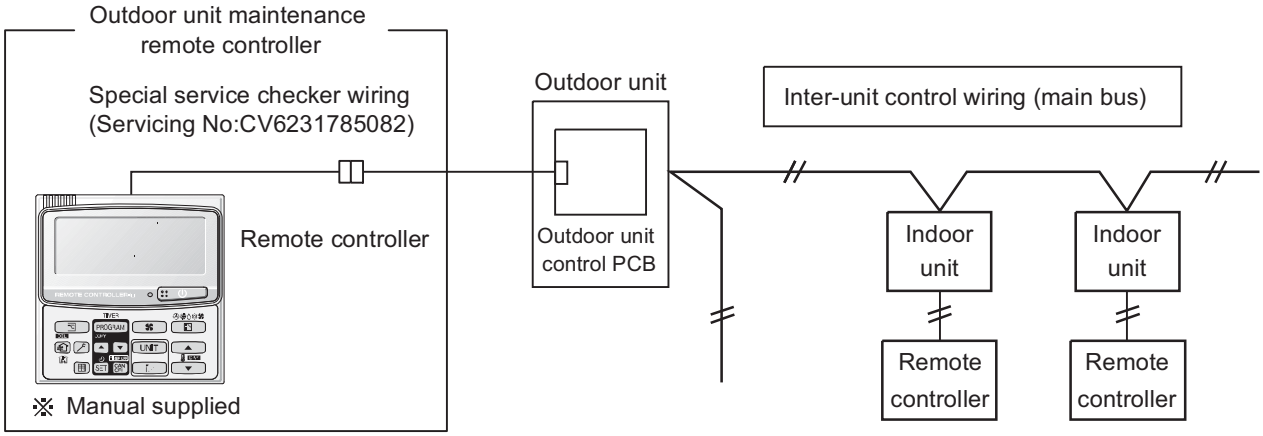

* The special service checker wiring is required in order to connect the outdoor unit maintenance remote controller to the outdoor unit PCB.

* Even when the outdoor unit maintenance remote controller is connected, a separate remote controller or other control device must be connected to the indoor unit.

6

6-2. Functions

■ Normal display functions

(1) Functions: Button operations can be used to perform the following functions.

- Start/stop of all indoor units
- Switching between cooling and heating
- Test run of all indoor units
- High-speed operation of indoor units (Do not use with actual units. This may damage the devices.)

(2) Display: The following can be displayed.

- Alarm details
- No. of indoor/outdoor units
- Unit Nos. of connected indoor/outdoor units
- Indoor/outdoor unit operating status (blinks when an alarm occurs)
- Indoor unit thermostat ON
- Individual display of outdoor unit alarms
- Outdoor unit compressor total operating time
- Outdoor unit oil sensor oil level
- Outdoor unit total power ON time
- Outdoor unit microcomputer version
- Others

■ Temperature monitor
- Displays the indoor/outdoor unit sensor temperatures.

■ Outdoor unit alarm history monitor
- Displays the outdoor unit alarm history.

■ Setting modes
- Setting mode 1 and setting mode 2 are used to make the outdoor EEPROM setting.

6-3. Normal Display Operations and Functions

■ Normal display functions
- Connect the special service checker wiring to the outdoor unit PCB.
  The connection is shown in the figure below.

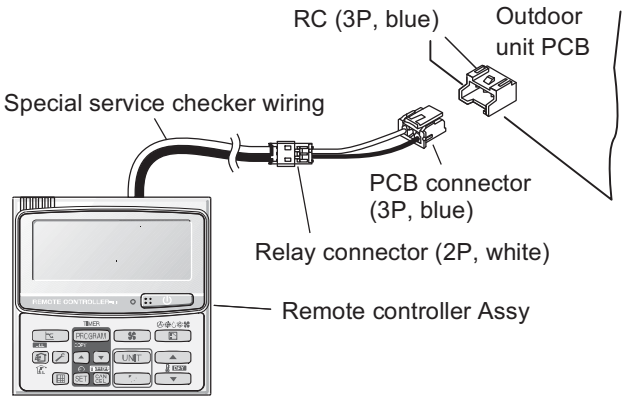

* It is not necessary to disconnect the communications line in the inter-unit control wiring if it has already been connected at this time.
* Setting modes 1 and 2 can be used even when the outdoor unit is independent (when 1 maintenance remote controller is connected to 1 outdoor unit and automatic address setting for the indoor units has not been completed).
* Displays the overall system status for that refrigerant system.

● All units start/stop (Fig. 6-1)

□Operation□

The button can be used to start and stop all the indoor units.
- The LED turns ON when 1 or more indoor units is operating.
- The LED blinks when an alarm has occurred at 1 or more indoor units during operation.

● Switching between cooling/heating (Fig. 6-1)

□Operation□

The button switches between heating and cooling modes.
- The specifications are equivalent to the heating/cooling input that was present on earlier outdoor unit PCBs.
- The display shows the operating mode of the indoor unit with the lowest number.

● All units test run (Fig. 6-2)

□Operation□

The button switches test run ON/OFF for all indoor units.
- Press and hold for 4 seconds to turn ON.
  "Test run" is displayed while the test run is in progress.
- Conditions of test runs that are started from the unit remote controller are not displayed on the outdoor unit maintenance remote controller.

Fig. 6-1

Fig. 6-2

6

■ Display (functions)

- Use the temperature setting ▲ and ▼ buttons to change the item code.

Item code	Display contents	Remarks
00(1)	Outdoor unit contents (code) : OFF when normal Blinking 8 - alarm code display at pre-trip,LED (2)	At initial status
01	No. of indoor units connected in that refrigerant system	
02	Unit Nos. of connected indoor units in that refrigerant system *2	
03	Operating status of indoor units in that refrigerant system (blinks when alarms occur)*2	
04	Unit Nos. of indoor units in that refrigerant system where the thermostats are ON *2	
05	No. of outdoor units connected in that refrigerant system	No. of connected units :1
06	Unit Nos. of connected outdoor units in that refrigerant system *2	
07	Operating status of outdoor units in that refrigerant system (blinks when alarms occur) *2	
08		
09		
0A		
0b		
0C		
0d		
0E		
0F		
10	Total compressor operating time (in 1-h. units)*3	
11		
12		
13		
14		
15		
16	Total power ON time of outdoor unit (in 1-h. units)	
17	Compressor start count	
18		
19		
FE	Outdoor unit microcomputer firmware version	
FF	Outdoor unit microcomputer software version	

* See following page for *2 and *3.

- XX-YY R.C.
  Displays the outdoor unit address of the selected outdoor sub-bus.
  XX = Main bus line outdoor system address (1 – 30)
  YY = Outdoor unit address in outdoor sub-bus (1 – 8). This is “1” when there is only 1 outdoor unit.

□Sample displays□

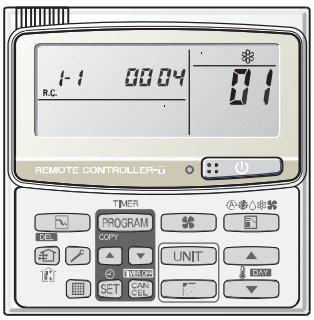

01: □No. of connected indoor units□
4 units connected

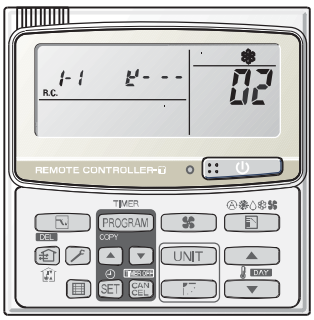

02: □Unit Nos. 1, 2, 3, and 4 are connected□

Locations where (1), (2), and (3) are displayed as shown below.

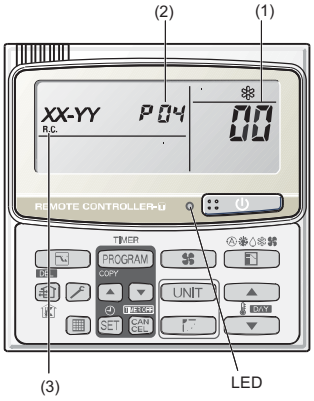

*2: 7-segment, 4-digit display for remote controller timer display

The connected unit Nos. are displayed as shown below, using the 7-segment 4-digit (88:88) display and the colon.

● Display for unit Nos. 1 – 20

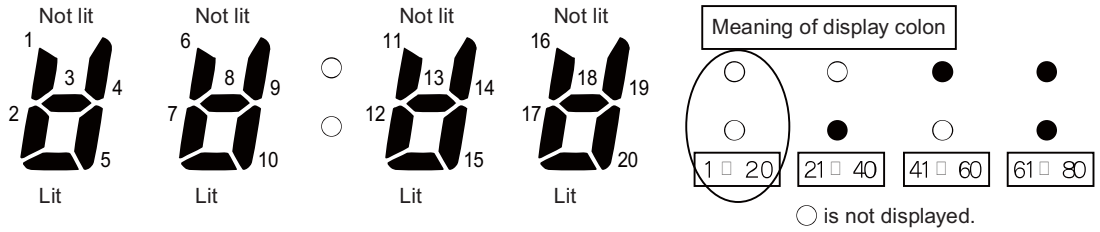

● Display for unit Nos. 21 - 40

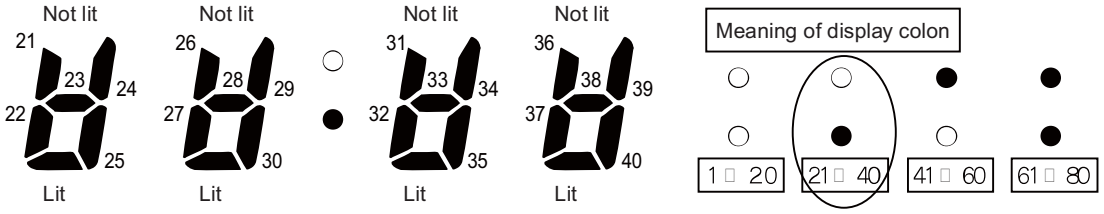

● The meaning of the colon display changes in the same way, allowing unit Nos. up to 80 to be displayed.

● Sample displays of the unit Nos. of connected indoor units

• Display of unit No. 1

• Display of unit Nos. 1 and 2

• Display of unit Nos. 1, 2, and 3

• Display of unit Nos. 1, 2, 3, and 4

NOTE

The colon display (Unit Nos. 1 – 20, 21 – 40) changes automatically every 10 seconds.

(The display does not change if higher unit numbers do not exist.)
Pressing the button switches the display immediately to the next higher level, even if 10 seconds have not passed.

*3: The total compressor operating time is displayed (in 1-hour units) using 8 digits.
- When the first 4 digits are displayed, the top point of the colon is lit.
- When the last 4 digits are displayed, the colon points are not lit.
- The display of the first 4 and last 4 digits changes automatically every 10 seconds. It can also be changed by pressing the button.

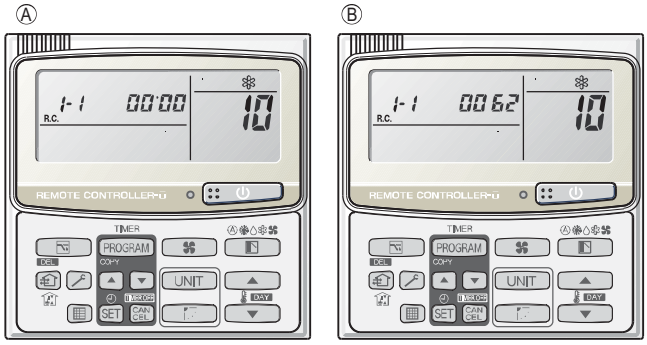

10: □Total compressor operatin time□ (A) and (B) are displayed alternately.

NOTE

With the outdoor unit maintenance remote controller (when connected to the outdoor unit), the unit remote controller check functions will not operate.

6-4. Monitoring Operations: Display of Indoor Unit and Outdoor Unit Sensor Temperatures

□Operating procedure□

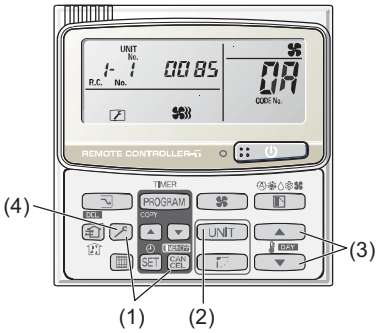

(1) Press and hold the button and CAN CEL button simultaneously for 4 seconds or longer to switch to temperature monitor mode.
During temperature monitoring, “Service Monitor” is lit.
(The display and operations are the same as when monitor mode is started from the unit remote controller.)

(2) Press UNIT the button and select the indoor unit to monitor.

(3) Use the temperature setting ▲ and ▼ buttons to select the item code of the temperature to monitor.
The selected indoor unit No. and the temperature data are displayed.

(4) To end monitoring, press the button. The display returns to the normal display.

* The display does not blink.

	Item code	Meaning of Code
Indoor unit data	02	Indoor unit intake temp.
	03	Indoor unit heat exchanger temp. (E1)
	04	Indoor unit heat exchanger temp. (E2)
	05	–
	06	–
	07	–
	08	–
	09	
Outdoor unit data	0A	Discharge temp. (TD)
	0b	–
	0C	–
	0d	Intake temp. (TS)
	0E	Outdoor unit heat exchanger temp. (C1)
	0F	Outdoor unit heat exchanger temp. (C2)
	10	–
	11	Outdoor air temp. (TO)
	12	–
	13	Inverter primary current
	14	–
	15	Outdoor MV value (1)
	16	Outdoor MV value (2)
	19	Frequency

* Depending on the model, some items may not be displayed.

6-5. Monitoring the Outdoor Unit Alarm History: Display of Outdoor Unit Alarm History

* Displays outdoor unit alarms only. Does not display indoor unit alarms.
* Check the indoor unit alarm histories separately using the indoor unit remote controllers or other control device.

□Operating procedure□

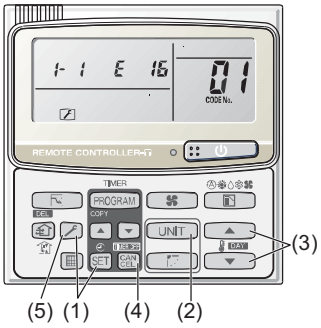

(1) Press and hold the button and SET button simultaneously for 4 seconds or longer to change to outdoor unit alarm history mode.
During the alarm history display, “Service Check” is lit.
The display and operations are the same as the monitoring of the alarm device history that is performed using the unit remote controller. However, the outdoor unit address appears instead of the unit No.

↓

(2) Press the UNIT button and select the outdoor unit for alarm history monitoring.

↓

(3) Use the temperature setting ▲ and ▼ buttons to select the item code for the alarm history.
The display shows the address of the selected outdoor unit, the item code, and the alarm history (alarm data).
The outdoor unit address is displayed as system XX-YY.
System XX = Outdoor unit system address

↓

YY = Outdoor unit sub-bus address
The item code is displayed as 01 – 08. 01 indicates the most recent alarm.
The alarm history is indicated by the alarm code. (If there have been no alarm codes, “----” is displayed.)

(4) To clear the alarm history, press the CAN CEL button. (The outdoor unit alarm history will be cleared.)

↓

(5) To end, press the button. The display returns to the normal remote controller display.

6-6. Settings Modes: Setting the Outdoor Unit EEPROM

■ Setting mode 1

□Operating procedure□

(1) Press and hold the button and button simultaneously for 4 seconds or longer.

(2) Use the temperature setting ▲ and ▼ buttons to change the item code. The item codes and setting data are shown in the table of “List of Item Codes” on the next page.

(3) Use the timer time ▲ and ▼ buttons to change the setting data.
To confirm the changed setting data, press the SET button.
(At this time, “Setting” stops blinking and remains lit.)

(4) During this mode, “Setting” is displayed, blinking. The outdoor unit address display section displays “ALL,” the item code and number (DN value in the table), and the setting data (6 digits).
(The setting data is displayed in 6 digits. The display changes between the first 3 digits (Fig.Ⓐ) and the last 3 digits (Fig.Ⓑ).
When the first 3 digits are displayed, the top point of the colon is lit.)

(5) To end the setting mode, press the button.

Ⓐ Display of first 3 digits

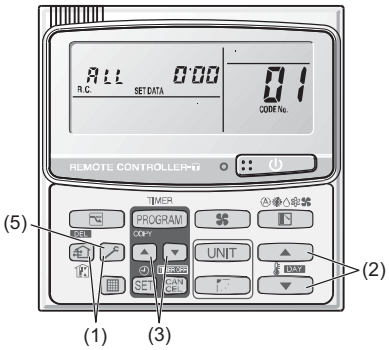

Ⓑ Display of last 3 digits

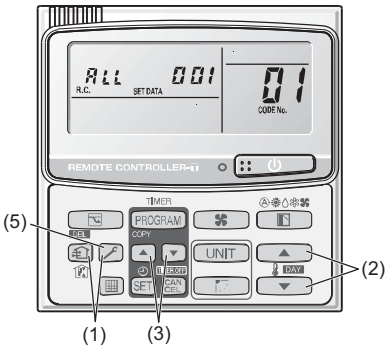

Ⓐ and Ⓑ are displayed alternately.
(Example shows display of 000 001.)

6

List of Item Codes (Some item codes cannot be set due to the type of models.)

Item code	Parameter	
05	Silent level	1=Silent level1 2=Silent level2 3=Silent level3
07	Ignore capacity	0 = Disabled 1 = Ignores capacity ratio
0C	Forced operation of indoor unit drain pump	0 = Disable 1 = 2 hours stopped + 20 minutes operating (regardless of whether the unit is running or stopped) 2 = 20 minutes stopped + 20 minutes operating (regardless of whether the unit is running or stopped) 3 = Always operating (regardless of whether the unit is running or stopped) 4 = XX minutes (Setting of Item code "2B") operating when the unit change to thermo off or stop from thermo on. 5 = XX minutes (Setting of Item code "2B") operating when the unit change to stop (regardless of whether the unit was thermo on or thermo off). 6 = Doing the action 4 and 5. 7 = During cooling only, Doing the action 6.
0E	Cooling only	0=Heat pump 1=Cooling only
12	Silent mode	0=Disable(at shipment) 1=At any times 2=Capacity priority 3=Timer setting 4=2+3
13	Silent mode starting time (hour)	22 = 22 o□clock (at shipment)
14	Silent mode starting time (minutes)	00 = 00 minute (at shipment)
15	Silent mode finishinging time (hour)	28 = 28 o□clock (at shipment)
16	Silent mode finishinging time (minutes)	00 = 00 minute (at shipment)
1A	Demand 1 Current	40% ～ 130% , -1(no control)
1B	Demand 1 Current	40% ～ 130% , -1(no control)
1D	Current control level	40% ～ 130% , -1(no control)
2B	Operating time of indoor unit drain pump	0=20minutes 1=30minutes 2=40minutes 3=50minutes 4=60minutes

* Figures in parentheses indicate the data at the time of shipment from the factory.

6

7. REMOTE CONTROLLER FUNCTIONS SECTION

7-1. Simple Settings Function 7-2
7-2. List of Simple Setting Items 7-4
7-3. Detailed Settings Function 7-5
7-4. List of Detailed Setting Items 7-7
7-5. Simple Setting Items 7-11
7-6. Detaild Setting Items 7-13
7-7. Remote Controller Servicing Functions 7-17
7-8. Test Run Function 7-19

7-1. Simple Settings Function

- This allows the filter lifetime, operating mode priority change, central control address, and other settings to be made for an individual or group-control indoor unit to which the remote controller used for simple settings is connected.

  When simple settings mode is engaged, operation stops at the individual or group-control indoor unit to which the remote controller for simple settings is connected.

□Procedure of CZ-RTC2□

① Press and hold the [🔧] and [⌂] buttons simultaneously for 4 seconds or longer.

② "SETTING", unit No. "1- 1" (or "ALL" in the case of group control), item code "01," and settings data "00XX" are displayed blinking on the remote controller LCD display (Fig. 7-1). At this time, the indoor unit fan (or all indoor unit fans in the case of group control) begins operating.

③ If group control is in effect, press the [UNIT] button and select the address (unit No.) of the indoor unit to set. At this time, the fan at the indoor unit begins operating.

*If unit No. "ALL" is displayed, the same setting will be made for all indoor units.

④ Press the temperature setting [▲]/[▼] buttons to select the item code to change.

⑤ Press the timer time [▲]/[▼] buttons to select the desired setting data.

*For item codes and setting data, refer to the following page.

⑥ Press the [SET] button. (The display stops blinking and remains lit, and setting is completed.)

⑦ Press the [🔧] button to return to normal remote controller display.

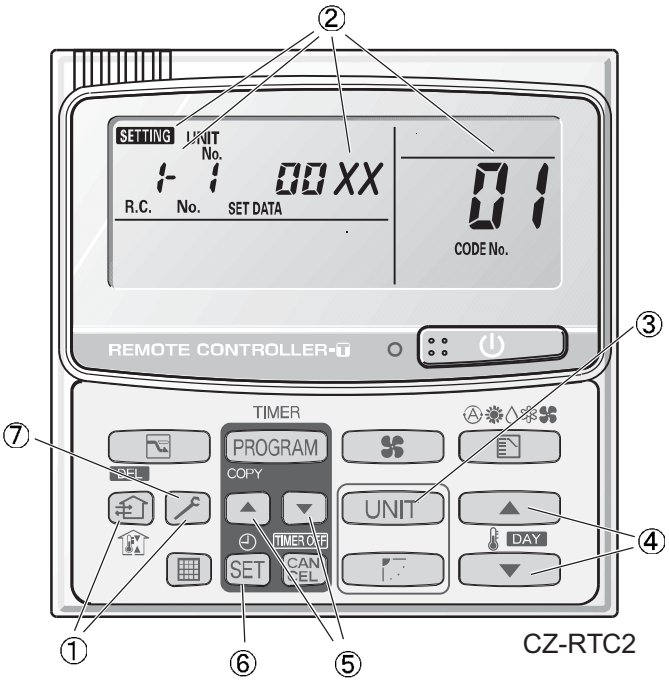

Fig. 7-1

7

□Procedure of CZ-RTC3□

CZ-RTC3

Fig. 7-2

① Keep pressing the [↩], [↵] and [▶] buttons simultaneously for 4 or more seconds. The “Maintenance func” screen appears on the LCD display.

Maintenance func 20:30 (THU)
1. Outdoor unit error data
2. Service contact
3. RC setting mode
4.Test run
Sel. ▸ Page [↵] Confirm

② Press the [▼] or [▲] button to see each menu.
If you wish to see the next screen instantly, press the [◀] or [▶] button.
Select “7. Simple settings” on the LCD display and press the [↵] button.

Maintenance func 20:30 (THU)
5. Sensor info.
6. Servicing check
7. Simple settings
8. Detailed settings
Sel. ◂ ▸ Page [↵] Confirm

The “Simple settings” screen appears on the LCD display.
Select the “Unit no.” by pressing the [▼] or [▲] button for changes.

Simple settings		20:30 (THU)
Unit no.	Code no.	Set data
3-1	01	0001
Sel. ▸ Next		

③ Select the “Code no.” by pressing the [◀] or [▶] button.
Change the “Code no.” by pressing the [▼] or [▲] button.

Simple settings		20:30 (THU)
Unit no.	Code no.	Set data
3-1	01	0001
Sel. ▸ Next		

④ Select the “Set data” by pressing the [◀] or [▶] button.
Select one of the “Set data” by pressing the [▼] or [▲] button.
Then press the [↵] button.

Simple settings		20:30 (THU)
Unit no.	Code no.	Set data
3-1	01	0002
Sel. [↵] Confirm		

⑤ Select the “Unit no.” by pressing the [◀] or [▶] button and press the [↩] button.
The “Exit simple settings and restart?” (Simple setting-end) screen appears on the LCD display.
Select “YES” and press the [↵] button.

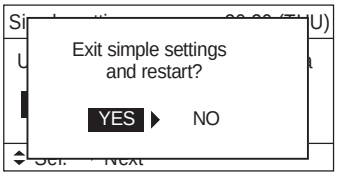

7

7-2. List of Simple Setting Items

Item code	Item	Setting data		
		No.	Description	
01	Filter sign ON time (filter life time)	0000	Not displayed	
		0001	150 hours	
		0002	2,500 hours	
		0003	5,000 hours	
		0004	10,000 hours	
		0005	Use the filter clogging sensor.	
02	Degree of filter fouling	0000	Standard (setting at time of shipping)	
		0001	Highly fouled (Filter sign ON time is reduced to one-half the set time.)	
03	Central control address	0001	Central control address 1	
		0002	Central control address 2	
		0003	Central control address 3	
		~	~	
		0064	Central control address 64	
		0099	No central control address set (setting at time of shipping)	
04	Operating mode priority change	0000	Normal (setting at time of shipping)	
		0001	Priority	
05	Fan speed when heating thermostat is OFF		Compressor ON	Compressor OFF
		0000	Lo 1 min., LL 3 min.	LL
		0001	Lo	LL
		0002	LL	LL
		0004	Lo 1 min., LL 3 min.	Lo
		0005	Lo	Lo
		0006	LL	Lo
06	Heating intake temperature shift	0000	No shift	
		0001	Shifts intake temperature 1 °C down.	
		0002	Shifts intake temperature 2 °C down.	
		0003	Shifts intake temperature 3 °C down.	
		0004	Shifts intake temperature 4 °C down.	
		0005	Shifts intake temperature 5 °C down.	
		0006	Shifts intake temperature 6 °C down.	
07	Electric heater installation	0000	No heater	
		0001	Heater installed	
08	Humidifying when heater thermostat is OFF	0000	No (setting at time of shipping)	
		0001	Yes	
0d	Permit/prohibit automatic heating/cooling	0000	Permit	
		0001	Prohibit	
0F	Cool-only	0000	Normal	
		0001	Cool only (Set “1” for item code OD.)	

NOTE

- In order to avoid water leakage and damage to the fan, do not set for humidifying when the thermostat is OFF unless a vaporizing humidifier is used.
- Consider the device purpose and type when changing the settings. Incorrect settings may result in malfunction.
- Do not change any setting data that does not appear in this list.

7-3. Detailed Settings Function

- This allows the system address, indoor unit address, and other settings to be made for the individual or group-control indoor unit to which the remote controller used for detailed settings is connected.

  When detailed settings mode is engaged, operation stops at the individual or group-control indoor unit where the remote controller used for detailed settings is connected. Simple settings items can also be set at this time.

□Procedure of CZ-RTC2□

① Press and hold the [🔧], [SET] and [CANCEL] buttons simultaneously for 4 seconds or longer.

② "SETTING", unit No. "1- 1" (or "ALL" in the case of group control), item code "10," and settings data "00XX" are displayed blinking on the remote controller LCD display (Fig. 7-3).

At this time, the indoor unit fan (or all indoor unit fans in the case of group control) begins operating.

③ If group control is in effect, press the [UNIT] button and select the address (unit No.) of the indoor unit to set. At this time, the fan at the indoor unit begins operating.

④ Press the temperature setting [▲]/[▼] buttons to select the item code to change.

⑤ Press the timer time [▲]/[▼] buttons to select the desired setting data.

*For item codes and setting data, refer to the following page.

⑥ Press the [SET] button. (The display stops blinking and remains lit, and setting is completed.)

⑦ Press the [🔧] button to return to normal remote controller display.

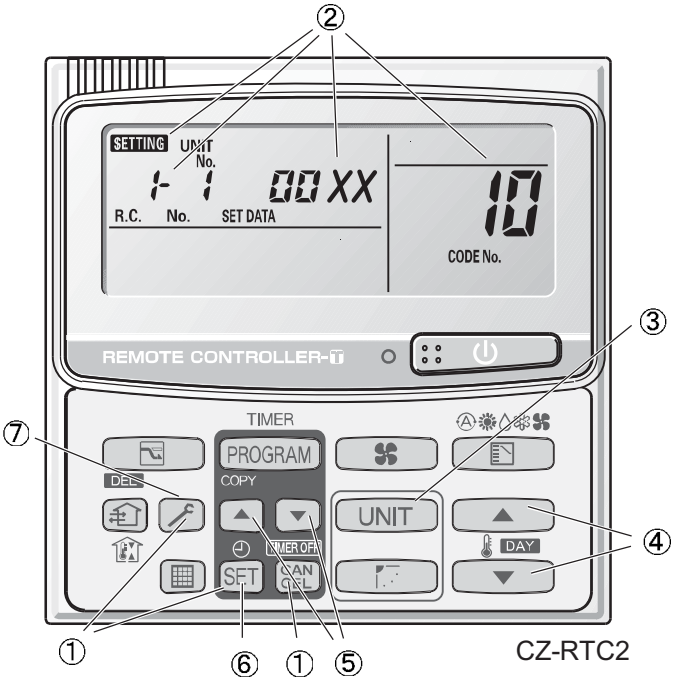

Fig. 7-3

7

□Procedure of CZ-RTC3□

CZ-RTC3

Fig. 7-4

① Keep pressing the [↩], [↵] and [▶] buttons simultaneously for 4 or more seconds. The "Maintenance func" screen appears on the LCD display.

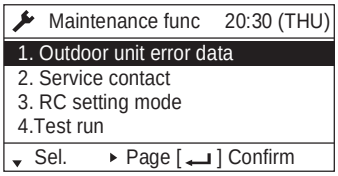

② Press the [▼] or [▲] button to see each menu.
If you wish to see the next screen instantly, press the [◀] or [▶] button.
Select "8. Detailed settings" on the LCD display and press the [↵] button.

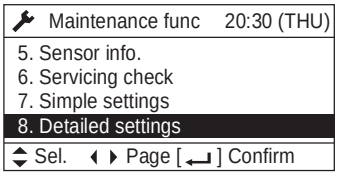

The "Detailed settings" screen appears on the LCD display.
Select the "Unit no." by pressing the [▼] or [▲] button for changes.

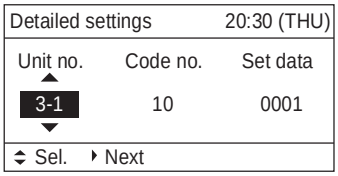

③ Select the "Code no." by pressing the [◀] or [▶] button.
Change the "Code no." by pressing the [▼] or [▲] button (or keeping it pressed).

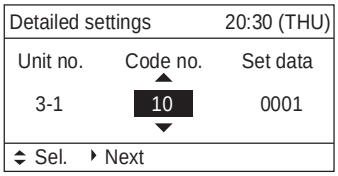

④ Select the "Set data" by pressing the [◀] or [▶] button.
Select one of the "Set data" by pressing the [▼] or [▲] button.
Then press the [↵] button.

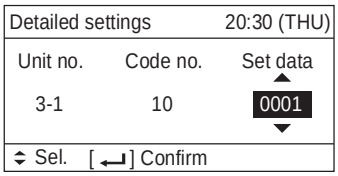

⑤ Select the "Unit no." by pressing the [◀] or [▶] button and press the [↩] button.
The "Exit detailed settings and restart?" (Detailed setting-end) screen appears on the LCD display.
Select "YES" and press the [↵] button.

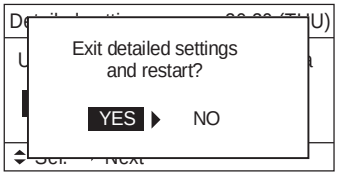

7

7-4. List of Detailed Setting Items

Item code	Item	Setting data			
		No.	Description	No.	Description
10	Type	0001	4-Way Cassette (U1) 4-Way Cassette 60 x 60 (Y1)	0005	Low Silhouette Ducted (F1) Ducted (N1)
		0006	High Static Pressure Ducted (E1)	0007	Ceiling (T1) (T2)
		0008	Wall mounted (K1)		
11	Indoor unit capacity	0005	36 (Type 36)	0007	45 (Type 45)
		0009	56 (Type 50)	0011	71 (Type 60)
		0012	80 (Type 71)	0015	112 (Type 100)
		0017	140 (Type 125)	0018	160 (Type 140)
		0021	224 (Type 200)	0023	280 (Type 250)
12	System address	0001	Unit No. 1		
		0002	Unit No. 2		
		0003	Unit No. 3		
		~	~		
		0030	Unit No. 30		
		0099	Not set		
13	Indoor unit address	0001	Unit No. 1		
		0002	Unit No. 2		
		0003	Unit No. 3		
		~	~		
		0064	Unit No. 64		
		0099	Not set		
14	Group control address	0000	Individual (1:1 = Indoor unit with no group wiring)		
		0001	Main unit (One of the group-control indoor units)		
		0002	Sub unit (All group-control indoor units except for main unit)		
		0099	Not set		
17	Cooling intake temperature shift	–010	Shifts intake temperature by –10°C.		
		–009	Shifts intake temperature by –9°C.		
		~	~		
		–001	Shifts intake temperature by –1°C.		
		0000	No intake temperature shift		
		0001	Shifts intake temperature by +1°C.		
		~	~		
		0009	Shifts intake temperature by +9°C.		
		0010	Shifts intake temperature by +10°C.		
18	Automatic stop time after operation start * Can be set in 5-minute units.	0000	Function disabled		
		0001	Stops automatically 5 minutes after operation starts.		
		0002	Stops automatically 10 minutes after operation starts.		
		~	~		
		0123	Stops automatically 615 minutes after operation starts.		
		0124	Stops automatically 620 minutes after operation starts.		
		0125	Stops automatically 625 minutes after operation starts.		

Item code	Item		Setting data	
			No.	Description
1b (1B)	Forced thermostat ON time		0000	5 minutes
			0001	4 minutes
1E	Temperature shift for cooling/heating change in auto heat/cool mode		0001	± 1°C
			0002	± 2°C
			0003	± 3°C
			~	~
			0007	± 7°C
1F (Upper limit) 20 (Lower limit)	Change to remote control temperature setting range	Cooling	0018	18°C (Lower limit at shipment)
			0019	19°C
			~	~
			0029	29°C
			0030	30°C (Upper limit at shipment)
21 (Upper limit) 22 (Lower limit)		Heating	0016	16°C (Lower limit at shipment)
			0017	17°C
			~	~
			0029	29°C
			0030	30°C (Upper limit at shipment)
23 (Upper limit) 24 (Lower limit)		Drying	0018	18°C (Lower limit at shipment)
			0019	19°C
			~	~
			0029	29°C
			0030	30°C (Upper limit at shipment)
25 (Upper limit) 26 (Lower limit)		Auto heat/cool	0017	17°C (Lower limit at shipment)
			0018	18°C
			~	~
			0026	26°C
			0027	27°C (Upper limit at shipment)
29	Humidifier operation		0000	Normal
			0001	Ignore heat exchanger temperature conditions.
2A	Filter (CN70) input switching		0000	Filter input (differential pressure switch input)
			0001	Alarm input (for trouble input about air cleaner or similar device)
			0002	Humidifier input (Operates linked with drain pump when humidifier is ON.)
2C	Indoor unit electronic control valve		0000	Present (Setting at shipment)
			0002	None
2E	T10 terminal switching		0000	Normal (Used as optional relay PCB or EMA standard HA terminal.)
			0001	Used for OFF reminder
			0002	Fire prevention input

7

Item code	Item	Setting data	
		No.	Description
2F	Automatic drain pump operation	0000	No forced operation
		0001	Forced operation for 1 minute
		~	~
		0060	Continuous operation
31	Ventilation fan operation	0000	None
		0001	Ventilation fan operated by remote controller.
32	Wired remote controller sensor	0000	Not used. (Body sensor is used.)
		0001	Remote control sensor is used.
34	“Operation change control in progress” display	0000	Normal (displayed)
		0001	Not displayed
35	OFF reminder function for when weekly timer is used	0000	None
		0001	Only stop time setting is enabled.
3C	Heat exchanger temperature for cold air discharge (Heat exchanger control point for control to prevent cold air)	0008	Control temperature 8°C
		0009	Control temperature 9°C
		~	~
		0025	Control temperature 25°C
		0026	Control temperature 26°C
3d	Fan output switching	0000	Output linked with fan. (ON when indoor unit fan is operating.)
		0001	Fan mode operation output
3E	Drain pump delayed start time	0000	No delayed start
		0001	1 minute delayed start
		0002	2 minutes delayed start
		~	~
		0058	58 minutes delayed start
		0059	59 minutes delayed start
		0060	60 minutes delayed start
40	Humidifier setting	0000	Humidifier output OFF. Drain pump stopped.
		0001	Humidifier output ON. Drain pump operates.
		0002	Humidifier output ON. Drain pump operates for 1 minute when total humidifier operating time reaches 60 minutes.
		0003	Humidifier output ON. Drain pump stopped.
45	Flap operation mode	0000	Standard setting
		0001	Draft reduction mode (Flap lower-limit position is shifted upwards.)
46	Flap swing mode	0000	Smudging reduction mode (Flap swing upper-limit position is shifted downwards.)
		0001	Normal mode
		0002	Draft reduction mode (Flap swing lower-limit position is shifted upwards.)

Item code	Item	Setting data		
		No.	Description	
			DC fan tap operating mode	Purpose
5d	Fan tap setting (Fan tap change in order to prevent drop in air discharge caused by filter installation)	0000	Standard	Standard (setting at shipment)
		0001	High ceiling use	High ceiling setting 1 (with standard panel)
			For low static-pressure filter	Ultra long-life filter, oil guard panel, ammonia deodorizing filter, optical regenerative deodorizing filter
		0003	High ceiling use	High ceiling setting 2 (with standard panel)
			For low static-pressure filter	(Antibacterial) high-performance filter (90□) (Antibacterial) high-performance filter (65□) Air-cleaning unit, air-cleaning unit + optical regenerative deodorizing filter, deodorant (activated charcoal) filter
			For air-blocking material	For 3-Way discharge, when discharge duct is connected
		0006	For air-blocking material	For 2-Way discharge
5E	Humidifier ON time (ON time per 60 seconds)	0000	No humidifier output	
		0001	1 second.	
		0002	2 seconds.	
		~	~	
		0058	58 seconds.	
		0059	59 seconds.	
		0060	Continuously ON	
60	Timer function change prohibit	0000	Function disabled	
		0001	Function enabled	
62	Smudging control	0000	No smudging control	

7

7-5. Simple Setting Items

Item code	Item	Description
01	Filter sign ON time setting (filter lifetime)	Changes the indoor unit filter lifetime when a high-performance filter or other optional product is installed.
02	Degree of filter fouling	Reduces the filter sign ON time to 1/2 of the standard time (setting at the time of shipping) for cases when filter fouling is more severe than normal.

Filter sign ON times for each model

Model data	Model	Filter sign ON time			
		Standard		Long-life	
		Standard	High fouling	Standard	High fouling
0001	4-Way Cassette (U1)	x	x	2500	1250
0005	Low Silhouette Ducted (F1)	x	x	x	x
0007	Ceiling (T2)	x	x	1500	750
0008	Wall Mounted (K1)	150	75	x	x
0036	Ducted (N1)	x	x	x	x

NOTE

- x indicates that there is no corresponding filter.
- 150 indicates the filter sign ON time that is set at shipment.
- High fouling: Set when 0001 is selected for the degree of filter fouling (item code 02).

Item code	Item	Description
03	Central control address	Set when using a central control device. Used when setting the central control address manually from the remote controller.
04	Operating mode priority change	Note (1)

NOTE

There are other methods to avoid control in which the mode selected first takes priority.

Methods of remotely controlling the operating mode

(1) Use the central functions of a central control device.

(2) Use a remote control relay PCB at the outdoor unit.

When the operating mode at the priority remote controller is changed, the operating modes of other remote controllers change as shown below.

Mode change at priority remote controller		Operating modes at other remote controllers	
Current mode	New mode	Current mode	New mode
Cooling or dry	Heating	Cooling or dry	Heating
		Fan	Fan (not changed)
Heating	Cooling	Heating	Cooling
		Fan	Fan (not changed)
Cooling	Dry	Cooling	Cooling (not changed)
		Dry	Dry (not changed)
Heating	Dry	Heating	Cooling
		Fan	Fan (not changed)
Cooling or dry	Fan	Cooling	Cooling (not changed)
		Dry	Dry (not changed)
		Fan	Fan (not changed)
Heating	Fan	Heating	Heating (not changed)
		Fan	Fan (not changed)

Item code	Item	Description
05	Fan speed setting when heating thermostat is OFF	Changes the fan speed setting when the heating thermostat is OFF.
06	Heating intake temperature shift	Shifts the intake temperature during heating. Can be set when the body thermostat is used.
07	Electric heater installation	Set when cost distribution is performed using an AMY central control system or similar system, and when an optional electric heater is installed. (This is unrelated to control of the electric heater.)
08	Humidifying when heater thermostat is OFF	Normally humidifying does not occur when the thermostat is OFF during heating operation. However, this setting can be changed in order to increase the amount of humidifying. Caution: In order to avoid water leakage and damage to the fan, do not use this setting unless a vaporizing humidifier is used.
0D	Permit/prohibit automatic heating/cooling	This setting can be used to prevent the automatic heating/cooling display on the remote control if the unit configuration permits automatic heating/cooling operation.
0F	Cooling-only	This setting allows a heat pump indoor unit to be operated as a cooling-only unit.

7-6. Detaild Setting Items

Item code	Item	Description
10	Unit type	Set when the indoor unit EEPROM memory is replaced during servicing.
11	Indoor unit capacity	
12	System (outdoor unit) address	These are not set at the time of shipping from the factory. These must be set after installation if automatic address setting is not performed.
13	Indoor unit address	
14	Group address	
17	Cooling intake temperature shift	Shifts the intake temperature during cooling and dry operation. (Enabled only when the body thermostat is used.) Increase this value when it is difficult to turn the thermostat ON.
18	Automatic stop time after operation start	The time at which an indoor unit is automatically stopped after operation starts can be set in increments of 5 minutes
1b	Forced thermostat ON time	Use this setting to change the time for forced operation at installation or servicing from 5 minutes to 4 minutes. (Enabled only with PAC models.)
1E	Temperature shift for cooling/heating change in “auto heat/cool” mode	“Auto heat/cool” selects the operating mode automatically based on the difference between the room temperature and the temperature set on the remote controller. This setting establishes a shift temperature for the heating/cooling temperature setting relative to the remote controller temperature setting.

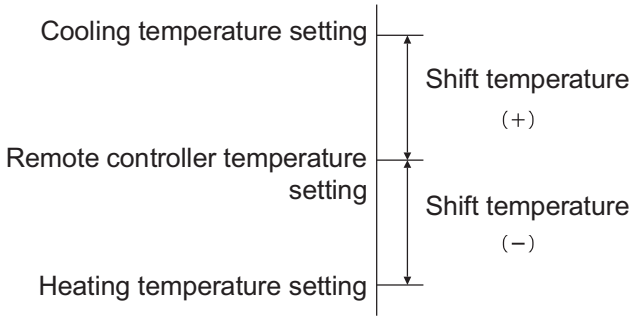

7

Item code	Item		Description
1F (Upper limit) 20 (Lower limit)	Change to the remote control temperature setting range	Cooling	This setting changes the temperature range (upper limit and lower limit) which is set from the remote controller or central control device. The set upper limit must be greater than or equal to the lower limit. If the temperature setting is to be a single point, set the upper limit and lower limit to the same temperature.
21 (Upper limit) 22 (Lower limit)		Heating	
23 (Upper limit) 24 (Lower limit)		Drying	
25 (Upper limit) 26 (Lower limit)		Auto heat/cool	
29	Humidifier operation which ignores the heat exchanger temperature		During heating operation, the humidifier operates when the heat exchanger temperature is suitable for humidifying. This setting is used to ignore this condition for humidifier operation and operate the humidifier more.
2A	Filter input switching		This setting switches the filter input according to the purpose of use.
2C	Indoor unit electronic control valve		This setting indicates whether or not an indoor unit electronic control valve is present. At the time of shipping, this setting is set according to the conditions of the indoor unit.
2E	T10 terminal input switching		Ordinarily, the T10 terminal is used as the HA terminal at the time of shipping. However, this setting is used when the T10 terminal is used for OFF reminder or for fire prevention input.
31	Ventilation fan operation from remote controller		It is possible to install a total heat exchanger and ventilation fan in the system, which can be started and stopped by the wired remote controller. The ventilation fan can operate linked with the start and stop of the indoor unit, or can be operated even when the indoor unit is stopped. Use a ventilation fan that can accept the no-voltage A contact as the external input signal. In the case of group control, the fans are operated together. They cannot be operated individually.
32	Switching to remote controller sensor		This setting is used to switch from the body sensor to the remote controller sensor. Check that “remote controller sensor” is displayed. Do not use this setting with models that do not include a remote controller sensor. Do not use this setting if both the body sensor and remote sensor are used.
34	ON/OFF of “Operation change control in progress” display		In a MULTI system with multiple remote controllers, switching between heating and cooling is restricted, and “Operation change control in progress” is displayed. This setting is used to prevent this display from appearing. Refer to the item concerned with operating mode priorities.
35	OFF reminder function for weekly timer		This setting switches the operation when the weekly timer is connected to the remote controller. This can be used to prevent cases in which the unit is accidentally left ON. There is no change when this setting is ON, however it is necessary to set the weekly timer ON time.

(Continued)

(Continued from previous page)

Item code	Item	Description
3C	Heat exchanger temperature for cold air discharge	The heat exchanger temperature control point for prevention of cold air discharge during heating operation can be changed.
3d	Fan output switching	The indoor unit PCB optional output for the fan can be switched according to the purpose of use.
3E	Drain pump delayed start time	The drain pump starts after the set time delay after cooling operation stops.
40	Humidifier drain pump setting	This specifies the humidifier and drain pump setting.
45	DC flap operation mode	Changes flap operation to draft reduction mode.
46	DC flap swing mode	Selects the swing operation mode for the flap.
5d	DC fan tap setting	Sets the DC fan tap according to the purpose of use. Change the settings data at the same time.
5E	Humidifier ON time	Sets the humidifier output ON time for when the humidifier is operating. ON/OFF control is performed during humidifier operation. This setting therefore sets the ON time per 60-second interval.
5F	Stop at time set for OFF timer after operation starts	This setting enables a function that stops operation when the amount of time set for the OFF timer has passed after remote controller operation was started.
60	Timer function change prohibit	This function prohibits changes from being made to the remote controller time setting.
62	Smudging control	Smudging control is disabled when 0000 is set.

■ DC Fan Tap Change Procedure

□Procedure□

Be sure to turn the main power OFF before performing the steps below.

(1) Check the optional product that will be used from the table below.

Setting No.	Optional part name	Optional part No.
[3]	Air-blocking material (for 3-direction discharge)	CZ-CFU2
	Air-blocking material (when a discharge duct is connected)	CZ-CFU2
[6]	Air-blocking material (for 2-direction discharge)	CZ-CFU2

(2) Setting No. [3]

Open the cover of the electrical component box, and connect the supplied short-circuit connector (2P, yellow) to short-circuit pin TP3 (2P, yellow) on the indoor unit control PCB.

(3) Setting No. [6]

Open the cover of the electrical component box, and connect the supplied short-circuit connector (2P, yellow) to short-circuit pin TP6 (2P, white) on the indoor unit control PCB.

7-7. Remote Controller Servicing Functions

- The remote controller includes a number of servicing functions. Use these as needed for test runs and inspections.

■ Timer Remote Controller CZ-RTC2

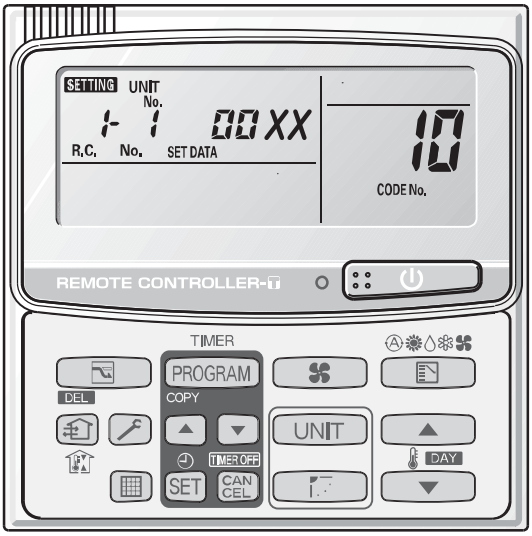

CZ-RTC2

Fig. 7-5

List of Servicing Functions

Functions	Description	Button operation	Reset operation	Unit status
Test run	Operation with forced thermostat ON	Press and hold the button for 4 seconds or longer.	Press the button.	Current operation is maintained.
Sensor temperature display	Temperature display from each sensor	Press and hold the and CAN CEL buttons for 4 seconds or longer.		
Servicing check display	Alarm history display	Press and hold the and SET buttons for 4 seconds or longer.		
Simple settings	Filter lifetime, operating mode priority, central control address, and other settings	Press and hold the and buttons for 4 seconds or longer.		When settings are made from a remote controller, the indoor unit where that remote controller is connected stops.
Detailed settings	System address, indoor unit address, central control address, and other settings	Press and hold the , CAN CEL and SET buttons for 4 seconds or longer.		
Automatic address	Automatic address setting based on command from the wired remote controller	Press and hold the and the timer operation buttons for 4 seconds or longer.	Automatic reset	Entire system stops.
Address change	Change of indoor unit address	Press and hold the and the timer operation buttons for 4 seconds or longer.	Press the button.	

7

■ High-spec Wired Remote Controller CZ-RTC3

Display of "maintenance function" screen

① Keep pressing the ⮌ , ↵ and ▶ buttons simultaneously for 4 or more seconds. The “Maintenance func” screen appears on the LCD display.

② Press the ▼ or ▲ button to see each menu.
If you wish to see the next screen instantly, press the ◀ or ▶ button.

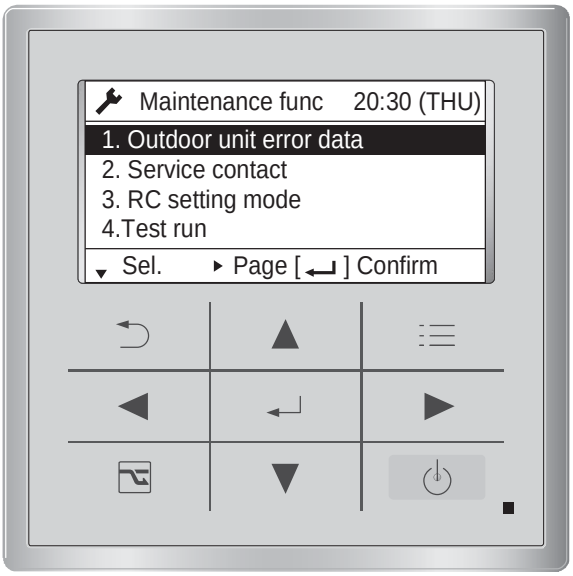

Fig. 7-6

List of Servicing Functions

Functions	Description	Menu selection	Reset operation	Unit status
Test run	Operation with forced thermostat ON	4. Test run	Press the ⮌ button.	
Sensor temperature display	Temperature display from each sensor	5. Sensor info		
Servicing check display	Alarm history display	6. Service check		
Simple settings	Filter lifetime, operating mode priority, central control address, and other settings	7. Simple settings	Press the ⮌ button. (Restart)	When settings are made from a remote controller, the indoor unit where that remote controller is connected stops.
Detailed settings	System address, indoor unit address, central control address, and other settings	8. Detailed settings		
Automatic address	Automatic address setting based on command from the wired remote controller	9. Auo address	Automatic reset	Entire system stops.

7

7-8. Test Run Function

Operates the unit with the thermostat forced ON.

□Procedure of CZ-RTC2□

① Press and hold the button for 4 seconds or longer.

② "TEST" appears on the remote controller LCD display (Fig. 7-7).

③ Start operation.

④ Press the button to return to normal remote controller display.

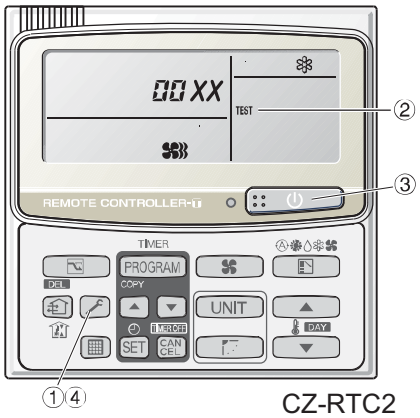

CZ-RTC2

Fig. 7-7

□Procedure of CZ-RTC3□

① Keep pressing the , and buttons simultaneously for 4 or more seconds. The "Maintenance func" screen appears on the LCD display.

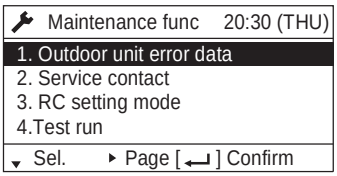

② Press the ▼ or ▲ button to see each menu.
If you wish to see the next screen instantly, press the ◀ or ▶ button.
Select "4. Test run" on the LCD display and press the button.

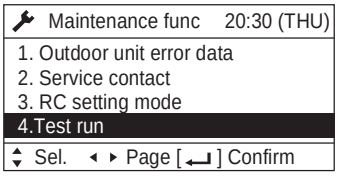

Change the display from OFF to ON by pressing the ▼ or ▲ button. Then press the button.

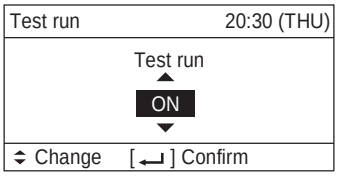

CZ-RTC3

Fig. 7-8

③ Press the button. "TEST" will be displayed on the LCD display.

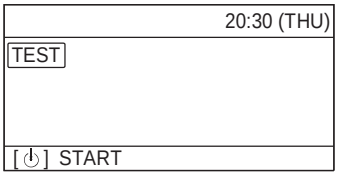

④ Press the button. Test run will be started. Test run setting mode screen appears on the LCD display.

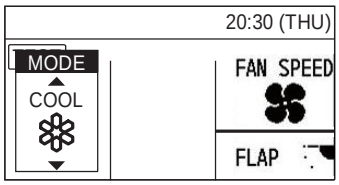

7

■ Sensor Temperature Display Function (displayed regardless of whether unit is operating or stopped)

The procedure below displays the sensor temperatures from the remote controller, indoor unit, and outdoor unit on the remote controller.

□Procedure to CZ-RTC2□

① Press and hold the [🔧] and [CAN CEL] buttons simultaneously for 4 seconds or longer.

② The unit No. "X-X" (main unit No.), item code "XX" (sensor address), and servicing monitor "00 XX" (sensor temperature) are displayed on the remote controller LCD display. (See Fig. 7-9 at right.)

③ Press the temperature setting [▲]/[▼] buttons and select the item code to the address of the sensor to monitor.
(For the relationships between the sensor addresses and sensor types, refer to the table of temperature sensors and addresses at below.)

④ If group control is in effect, press the [UNIT] button to select the unit to monitor.
Press the temperature setting buttons to select the item code to change.

⑤ Press the [🔧] button to return to normal remote controller display.

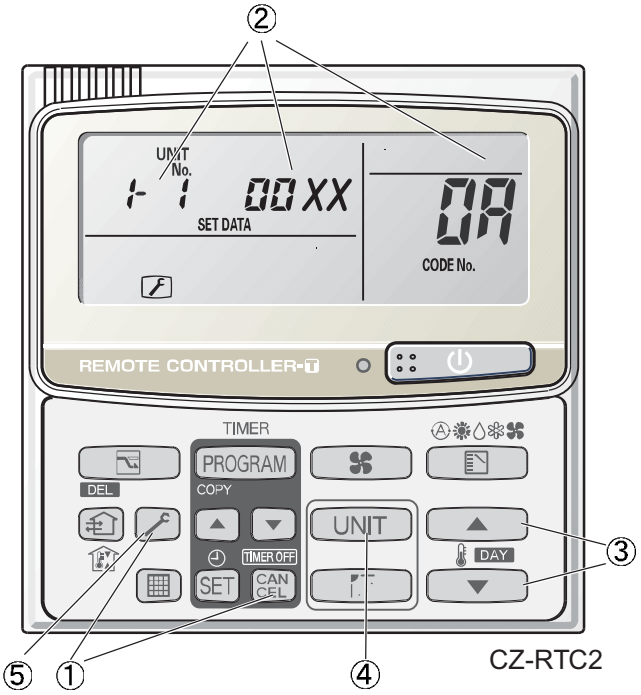

Fig. 7-9

Note:

The temperature display appears as "- - - -" for units that are not connected.

* If monitor mode is engaged while normal operation is in progress, only the parts of the LCD display shown in the figure will change. Other parts continue to display the same information as during normal operation.

Indoor unit sensors	
02	Intake temp.
03	E1
04	E2
05	E3
06	Discharge temp.
07	Discharge temp. setting
08	Position of indoor unit electronic control valve

Outdoor unit sensors				
Unit No.1	Unit No.2	Unit No.3	Unit No.4	
0A	2A	4A	6A	Discharge temp. 1
0B	2B	4B	6B	Discharge temp. 2
0C	2C	4C	6C	High-pressure sensor temp.
0D	2D	4D	6D	Heat exchanger gas 1
0E	2E	4E	6E	Heat exchanger liquid 1
0F	2F	4F	6F	Heat exchanger gas 2
10	30	50	70	Heat exchanger liquid 2
11	31	51	71	Outdoor air temp.
12	32	52	72	–
13	33	53	73	For inspection
14	34	54	74	CT2
15	35	55	75	For inspection
16	36	56	76	For inspection
17	37	57	77	Discharge temp. 3
18	38	58	78	CT3
19	39	59	79	For inspection
1A	3A	5A	7A	For inspection
1B	3B	5B	7B	Heat exchanger gas 3
1C	3C	5C	7C	Heat exchanger liquid 3
1D	3D	5D	7D	Low-pressure sensor temp.
1E	3E	5E	7E	Receiver temp.
1F	3F	5F	7F	Oil 1
20	40	60	80	Oil 2
21	41	61	81	Oil 3
22	42	62	82	For inspection

□Procedure of CZ-RTC3□

① Keep pressing the ↩ , ↵ and ▶ buttons simultaneously for 4 or more seconds.
The “Maintenance func” screen appears on the LCD display.

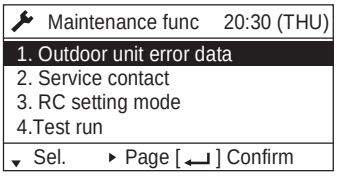

② Press the ▼ or ▲ button to see each menu.
If you wish to see the next screen instantly, press the ◀ or ▶ button.
Select "5. Sensor info." on the LCD display and press the ↵ button.

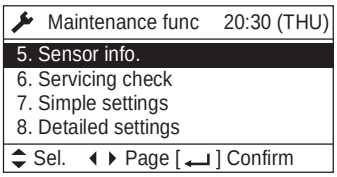

Select the “Unit no.” by pressing the ▼ or ▲ button for changes.

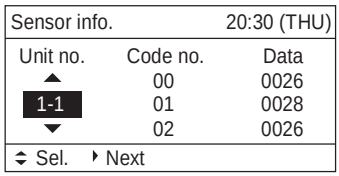

Then press the ▶ button.
Display sensor information of the unit.

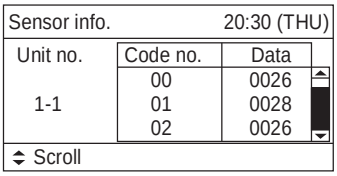

Refer the information by pressing the ▼ or ▲ button.

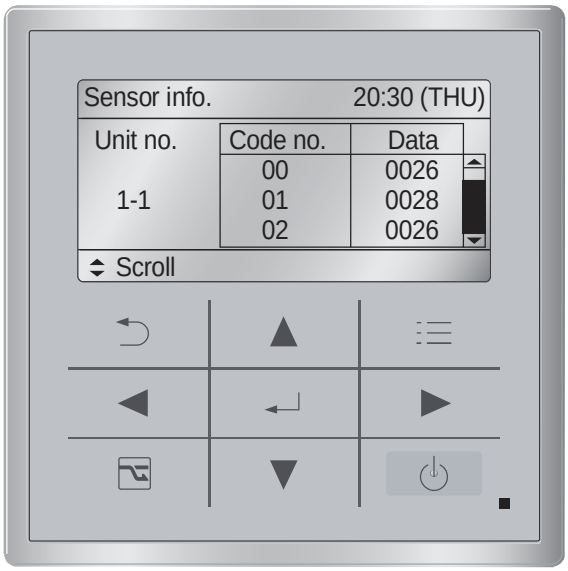

CZ-RTC3

Fig. 7-10

7

■ Automatic address setting

□Procedure of CZ-RTC3□

① Keep pressing the [↩], [↵] and [▶] buttons simultaneously for 4 or more seconds.
The "Maintenance func" screen appears on the LCD display.

② Press the [▼] or [▲] button to see each menu.
If you wish to see the next screen instantly, press the [◀] or [▶] button.
Select "9. Auto address" on the LCD display and press the [↵] button.

Maintenance func 20:30 (THU)
9. Auto address
10. Set elec. consumption
11. Set touch key
12. Check touch key
⇕ Sel. ◀ Page [↵] Confirm

③ The "Auto address" screen appears on the LCD display.
Change the "Code no." to "A1" by pressing the [▼] or [▲] button.

Auto address	20:30 (THU)
Code no.	O/D unit no.
A1	1
⇕ Sel. ▸ Next	

④ Select the "O/D unit no." by pressing the [◀] or [▶] button.
Select one of the "O/D unit no." for automatic address by pressing the [▼] or [▲] button.
Then press the [↵] button.
Approximately about 10 minutes are required.
When automatic address setting is completed, the units return to normal stopped status.

CZ-RTC3

Fig. 7-11

■ Checking indoor unit addresses

① Keep pressing the [↩], [↵] and [▶] buttons simultaneously for 4 or more seconds.
The "Maintenance func" screen appears on the LCD display.

Maintenance func 20:30 (THU)
1. Outdoor unit error data
2. Service contact
3. RC setting mode
4.Test run
▾ Sel. ▸ Page [↵] Confirm

② Press the [▼] or [▲] button to see each menu.
If you wish to see the next screen instantly, press the [◀] or [▶] button.
Select "7. Simple settings" on the LCD display and press the [↵] button.

Maintenance func 20:30 (THU)
5. Sensor info.
6. Servicing check
7. Simple settings
8. Detailed settings
⇕ Sel. ◀ ▸ Page [↵] Confirm

The "Simple settings" screen appears on the LCD display.
Select the "Unit no." by pressing the [▼] or [▲] button for changes.

Simple settings		20:30 (THU)
Unit no.	Code no.	Set data
3-1	01	0001
⇕ Sel. ▸ Next		

The indoor unit fan operates only at the selected indoor unit.

8. HOW TO INSTALL THE WIRELESS REMOTE CONTROLLER RECEIVER

■ Important Safety Instructions 8-2
■ Optional Controller (Remote Controller) 8-3
8-1. Names and Functions 8-3
8-2. Installing Batteries 8-5
8-3. Setting the Current Time 8-5
8-4. Operation 8-6
8-5. Timer Operation 8-7
8-6. Adjusting the Wind Direction 8-8
8-7. Operating Multiple In/Outdoor Units Simultaneously (Group Control) 8-8
8-8. Using the Remote Control 8-9
8-9. For Best Results 8-9
8-10. Addresses 8-9
8-11. Emergency Operation 8-11
8-12. Miscellaneous Settings 8-12
8-13. Before Requesting Service 8-13
■ How to Install the Wireless Remote Controller Receiver 8-14
8-14. Common to All Models 8-14
8-15. CZ-RWSU2 8-16
8-16. CZ-RWST2 8-18
8-17. CZ-RWSL2 8-21
8-18. CZ-RWSC2 8-24
8-19. CZ-RWSY2 8-28
8-20. CZ-RWST3 8-30
8-21. Common to All Models 8-32

■ Important Safety Instructions

⚠ Warning

Installation Precautions

- Do not install yourself
  Installation should always be performed by your dealer or a professional service provider.
  Electric shock or fire may result if an inexperienced person performs any installation or wiring procedures incorrectly.
- Use only specified air conditioners
  Always use only air conditions specified by the dealer.

Precautions for Use

- Do not touch switches with wet hands
  Electric shock and damage to the system can result.
- Protect the remote controller from water Damage to the system can result.
- Stop the system and turn the power off if you sense unusual smells or other irregularities
  Continuing operation when the system is out of order can result in electric shock, fire, and damage to the system.
  Contact your dealer.
- Do not swallow the battery.

Moving and Repair Precautions

- Do not repair
  Never repair the system by yourself.
- Contact your dealer before moving the system
  Contact your dealer or a professional service provider about moving and reinstalling the system.
  Electric shock or fire may result if an inexperienced person performs any installation procedures incorrectly.

■ Optional Controller (Remote Controller)

Wireless Remote Controller CZ-RWSU2 / CZ-RWST2 / CZ-RWSL2
/ CZ-RWSC2 / CZ-RWSY2 / CZ-RWSK2 / CZ-RWST3

One remote control can control a group of up to eight indoor units.

8-1. Names and Functions

REMOTE CONTROL

1. Operation Display	Displays the operation status. (The figure shows all the statuses.) ● The auto-flap display may be different, depending on the installed unit.
2. Start/Stop button	Pressing this button once starts and pressing again stops the operation.
3. Fan speed button	
4. Swing/Wind Direction button	
5. Timer setting button	Use for operating with a timer.
6. Reset button	Use this button after changing the batteries.
7. Cover	Press at the top center and then slide down.
8. Transmitter	
9. Remote control sensor	Detects the temperature at the remote controller when detection has been switched to the remote control by the sensor button.
10. Temperature setting buttons	raises the temperature setting 1 ℃ at a time. lowers the temperature setting 1 ℃ at a time.
11. Filter button	CZ-RWSC2 Press to turn off the filter lamp on the receiver.
12. Mode Select button	Press to switch the operation mode.
13. Ventilation button	Use this when connected to an aftermarket fan. Pressing this button starts and stops the fan. When the air conditioner is started or stopped, the fan starts or stops at the same time. (appears on the display of the remote control when the fan is operating.)
14. Address button	
15. Sensor button	Use this when switching to detect the temperature at the remote control. At shipping the default setting is set to detect the temperature at the unit. At this time is shown on the display.
16. Clock button	Use this when setting the clock.

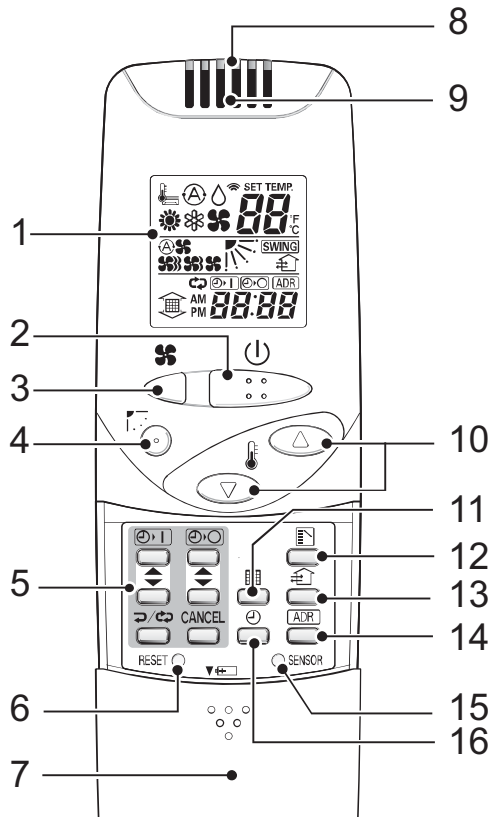

From this page on the names of remote control buttons will be abbreviated as the illustration of the “button”.
E.g.: Start/Stop button → ⏻

8

RECEIVER

1. Receiver	Receives the signal sent from the remote control.
2. Emergency operation button	Display lamps When an error occurs, one of the lamps flashes. When a display lamp is blinking, refer to " Before Requesting Service ".
3. Operating lamp	This lamp is lit when the unit is operating.
4. Timer lamp	This lamp is lit when the timer is set.
5. Standby lamp	• When the heater is working, the lamp lights at the following times. When the thermostat has operated during defrosting at the time of the startup. • The lamp flashes when an error occurs.
6. Filter lamp	This lamp is for notifying you when the filter needs to be cleaned.
7. Swing button	
8. Normal/Stop All switch	Use in the Normal position. It does not operate in the Stop All position. Remote control, main / remote control, secondary, switch In normal use this should be on remote control, main. It is also possible to use both in conjunction with a wired remote control (sold separately). (Consult with the dealer where the product was purchased about making the settings.) Test/On switch This is used during service. It is not for normal use. Test Run/On switch This is used during service. It is not for normal use.
9. Address switch	Differentiate between incoming and outgoing signals.

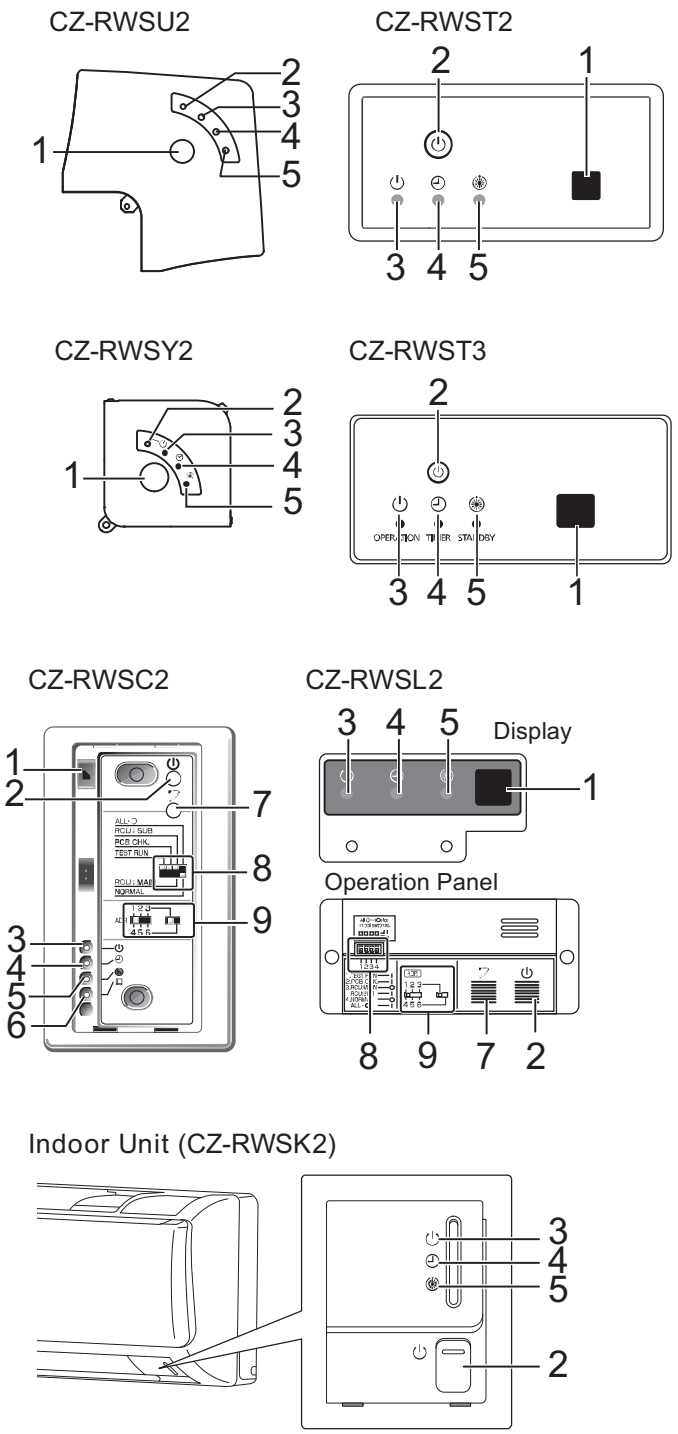

NOTE

- If a heat pump model is being used, it will beep twice and the operating lamp will light up on the display; if the timer and standby lamps blink alternately, a conflict between the heating and cooling exists, so the unit cannot operate in the desired mode. (On models that do not have an Auto function, even if Auto is selected, it works in the same way.)
- When the local operation is disabled by such as the centralized control, and if the Start, Stop, Mode or Temperature setting buttons are pressed, the unit will beep five times and the change will not be made.

8-2. Installing Batteries

1. Remove the cover.
2. Insert two AAA alkaline batteries.
   Put the batteries in with the polarity [+/–] as shown in the figure.
3. Gently insert one end of an unfolded paper clip (or a similar object that can fit) into the Reset hole and press the Reset button inside the hole and then put the cover back on.

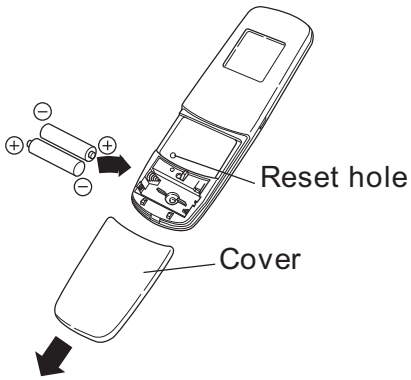

NOTE

- Change the batteries when the display of the remote control gets weak or if it will not work unless close to the receiver.
  (Alkaline batteries generally last about one year.)
- When changing batteries, always use two fresh batteries of the same make.
- If the remote control will not be used for a long period of time, remove the batteries.
- Please dispose of batteries appropriately.
- After changing the batteries, follow the procedures described below to reset the current time.

■ How to remove batteries

1. Remove the cover.
2. Press the battery toward the negative end and lift it out by its positive end.
   (As shown at right)
3. Remove the other battery in the same way.

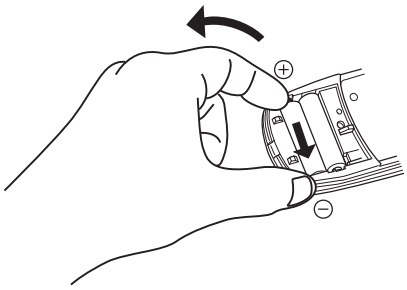

NOTE

- Dispose of the used batteries at the designated location in compliance with the applicable local ordinances.

⚠ Warning

- Do not swallow the battery.
- After removing the battery from remote control unit, keep it away from the reach of children.
  The battery can cause death by suffocation if swallowed.
- When inserting the battery, make sure the polarities (+ and -) are correct.

8-3. Setting the Current Time

After changing the batteries and pressing reset, be sure to reset the current time.
(When reset is pressed, the current time reverts to [0:00])

1. Press ◷ for two seconds or more.
   Once the clock displays starts blinking, the clock can be set.
2. Set the hour with ▲/▼ of the ◷I.
   If you press and hold the button, the time changes quickly.
3. Set the minutes with ▲/▼ of the ◷O.
   If you press and hold the button, the time changes quickly.
4. Pressing ◷ completes the time setting.

- While you are setting the current time, the time display flashes but the colon does not.
- If the buttons are not pressed for three minutes while setting the current time, it is set to the displayed time.

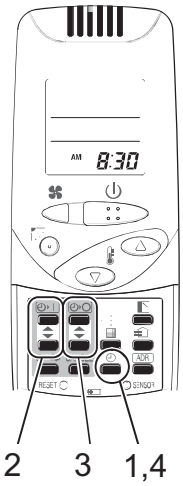

NOTE

When reset is pressed, the timer settings are deleted.

8

8-4. Operation

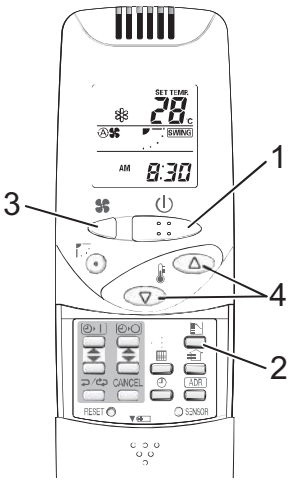

Auto Ⓐ, Heat ☀, Dry ♢, Cool ❄, Fan ✣

Models that only provide the cooling function cannot operate in the auto or heating modes.

Power: Turn on the power of the indoor unit at least 14 hours before operation.

1. Press ⏻.
2. Press ▭ and select from among Auto Ⓐ, Heat ☀, Dry ♢,Cool ❄ and Fan ✣.
3. Press ✣ and select the desired speed.
   If set to Auto Ⓐ✣, the fan speed switches automatically.
   (Auto does not work when in the Fan mode.)
4. Press one of the ▽ △ buttons and set the desired temperature.
   Temperature settings cannot be made when in the Fan mode.

	Auto Ⓐ	Heat ☀	Dry ♢ / Cool ❄
MAX	27	26	30
MIN	17	16	18

Stop: Press ⏻.

When the unit is stopped with the remote control, even though the compressor of the outdoor unit stops, the fan on the outdoor unit may continue to run for a while.

If the unit is not heating very effectively with a Low fan speed ✣, switch the fan speed to High ✣ or ✣ Medium.

Depending on the indoor unit being used, it may indicate a function that it does not have. (The fan speed is set.)

If you cannot turn the air conditioner off in the normal way.

Disconnect the power to the indoor unit and contact the dealer where the product was purchased.

□Auto Operation□

If all the indoor units are identical in a cooling system and are under control as one group, it heats or cools automatically via the differences between the set temperature and the room temperature.

□Dry Operation□

- Depending on the indoor unit used, the remote control may have a [Dry] ♢ indicator on its display even though the unit does not have the Dry function. (Same as cooler operation)
- When the room temperature approaches the temperature setting, the unit continues to start up or stop automatically.
- When the drying mode stops operating, the indoor unit's fan blows a gentle breeze in order to keep the moisture from returning to the room at a minimum.
- Depending on the indoor unit used, and/or the temperature in the room, the fan speed may not be adjustable.
- Depending on the unit used, when the outside air temperature is 15 °C or less, the dry function will not operate.

8-5. Timer Operation

- When setting the timer, make sure the current time on the remote control is accurate.
- The timer's clock can only be set when the display of the remote control is ON.
- After setting the timer, put the remote control in a place where its signal will reach the receiver of the indoor unit. (When the time set for the timer is reached, a signal is sent from the remote control to Start/Stop the unit.)

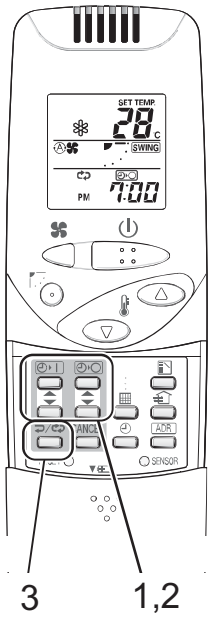

Using the Timer

1. Press either ▲ / ▼ of the ⏲I or ⏲O, and while the time is being displayed, if you press ▲ / ▼ again, a scheduled time can be set.
   The time last set on the timer is displayed.
   "--:--" indicates time to change the batteries.
2. Press either ▲ / ▼ of the ⏲I or ⏲O and set the timer to the desired time.
   Every time you press ▲/▼, the time changes in 10 minute increments.
   If you press and hold the button, the time changes quickly.
3. After setting the timer, if you press ⇄/⟲, the time you set changes to a steady display, indicating settings are complete.
   After the timer setting is displayed for three seconds, the display reverts to the current time.

Combining ON and OFF Timers

- Setting the ON and OFF timers, respectively.

Checking the timer setting

- If you press either ▲/▼ for the ⏲I or the ⏲O, the scheduled time is displayed for four seconds.
- When no timer setting has been made, it displays --:--. (Initial Setting)

Changing a timer setting

- Press ▲/▼ for the ⏲I or the ⏲O, and then when the timer setting is displayed, press ▲ / ▼ for the timer again.

Canceling a timer setting

- If you press [CANCEL], the timer setting is canceled.
- If you wish to cancel the setting for either the ⏲I or the ⏲O timer, press ▲ / ▼ or the desired timer and when the scheduled time is displayed, press [CANCEL].

Using the same timer setting every day

- If you press ⇄/⟲ for 2 or more seconds, " ⟲ " is displayed and the ON timer or the OFF timer will operate the unit at the same time every day.
- If you press ⇄/⟲ again for two seconds or more, " ⟲ " goes off and the timer operates just once.

8

8-6. Adjusting the Wind Direction

- Never try to manually move the flap (up-down wind direction plate) that is operated by the remote control.
- When the unit stops, the flap (up-down wind direction plate) automatically faces downwards.
- When the unit is in heating standby, the flap (up-down wind direction plate) faces upward.
  Also, bear in mind that the flap starts swinging after the heating standby mode is released, but the display on the remote control indicates Auto Flap during standby heating as well.

CZ-RWSU2 / CZ-RWST2 /
CZ-RWSL2 / CZ-RWSY2 / Indoor Unit (CZ-RWSK2) / CZ-RWST3

Setting the Wind Direction
While the unit is operating, every time you press , the direction the flap faces changes.

Setting Flap to Swing
If you press to set the flap (up-down wind direction plate) in its most downward facing position, and then press again, SWING is displayed and the flap swings automatically up and down.

Stopping Flap Swing
If you press again while the flap is swinging, you can stop the flap from swinging and set it in place as desired. Thereafter, if you press , you can set the wind direction starting from the most upward position.

- When the unit is in the Cool or Dry modes, the flap cannot stop facing downwards. If you try to stop the flap from swinging while it is facing downwards, it will continue moving until it is in the third position from the top.

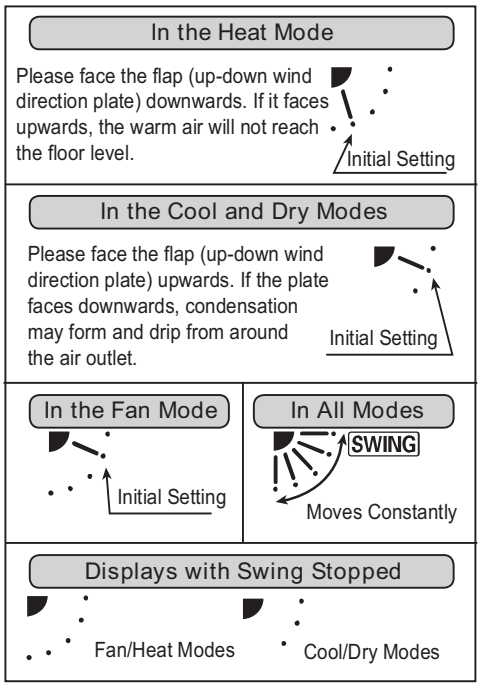

CZ-RWSC2
The available functions differ depending on the indoor unit being used.
The wind direction cannot be set via remote control for any models other than those noted below.
For more information, please refer to the users' manual that came with your indoor unit.
Four-direction Ceiling Cassette Models, Bi-directional Ceiling Cassette Models,
Unidirectional Cassette Models for High Ceilings, Ceiling Suspended Models, Wall-Mounted Models
Please refer to Setting the Wind Direction and Stopping Flap Swing.

8-7. Operating Multiple In/Outdoor Units Simultaneously (Group Control)

Group control works well for providing air conditioning to one, large room with more than one air conditioning units.

- One remote control can operate up to eight indoor units.
- All the indoor units have identical settings.
- Set temperature sensing to the indoor unit (Main Sensor).

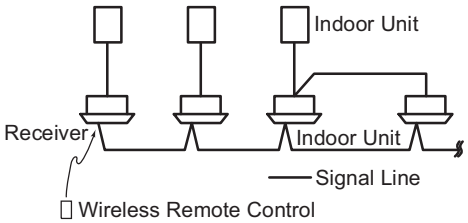

8

8-8. Using the Remote Control

- Point the transmitter of the remote control at the receiver. When the signal is received correctly it will beep once. (It beeps twice only when the unit starts operating.)
- The signal can be received at a distance of about 6 meters. This distance should be used only as a guide. It depends on battery strength.
- Make sure nothing is between the remote control and the receiver that could block the signal.
- Do not leave the remote in direct sunlight, where the wind from the air conditioner can blow directly on it, or near any other heat source.
- Take care not to drop, throw or wash the remote control with water.
- The signal from the remote control may not be received in rooms with rapid start fluorescent lighting, inverter lights, plasma displays, LCD televisions (monitor), etc. For more information, please contact the dealer where the product was purchased.

Wall Mount Use

- Press ⏻ from the location you wish to mount the remote and make sure the signal is received correctly.
- Pull the remote control forward to remove it.

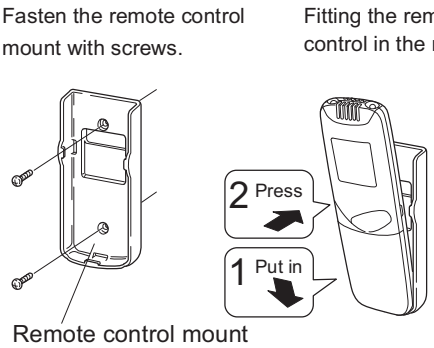

8-9. For Best Results

Don't get the remote control too far away from the receiver.
This may cause a malfunction. Be sure to keep the remote control in the same room as the receiver.

Point the remote control at the receiver.
When the signal is received correctly it will beep one time.

Avoid locating the remote control where it is covered, such as behind a curtain.
Keep it out in the open.

8-10. Addresses

In both multi and single unit installations, when more than one indoor unit is installed in the same room with a compatible remote control, addresses can be set up to avoid crosstalk. By setting the address switches on the receivers and matching them with the number of addresses on the remote control, up to six indoor units can be controlled separately with the remote control. (When using units in a flexible combination or operating multiple units simultaneously, as they are operated at the same time, they cannot be controlled individually.) There are separate address settings, receiver addresses for the receivers*1 and transmitter addresses for the remote control.
For more information, please contact the dealer where the product was purchased.

- The setting procedure is different for CZ-RWSY2 and Indoor Unit (CZ-RWSK2). (See Setting Addresses in the next page.)
- These settings are saved in nonvolatile memory in the remote control, so even when its batteries are changed, the settings do not have to be made again.

*1 CZ-RWST2 / CZ-RWST3 is of receivers (Inside the indoor unit); CZ-RWSL2 is of an operation panel. (Inside the indoor unit)

8

Checking Addresses

When you press ADR on the remote control, its current address is shown in the display. If this address corresponds to the address of a receiver*2, the buzzer sounds. (If it is on ALL, the buzzer will always sound.)
If it is on ALL, it can be operated regardless of receiver addresses. Point the remote control at the receiver you wish to operate and transmit.

*2 CZ-RWSL2 is a receiver. (Indoor unit)

Matching up Addresses

Setting Remote Control Addresses

1. If you press [ADR] and ⊃/⊂⊃ at the same time, "SET" will blink.
2. While holding [ADR] down, every time you press ⊃/⊂⊃, it cycles from ALL → 1 → 2 → 3 6 → ALL.
   Set it to the receiver address switch of the indoor unit you wish to operate.
3. When you release [ADR], the address that was displayed is set.
   When you do this, if it corresponds to the receiver's address setting, the buzzer sounds.

Address Display on the Remote Control	ALL	1	2	●●●●●	6
CZ-RWSU2					
Position of receiver's (inside indoor unit) address switch	The position of the receiver's address switch does not matter.	4-6 1-3 S001; 3 2 1 / 6 54 S002	4-6 1-3 S001; 3 2 1 / 6 54 S002	●●●●●	For 1, 2 and 3, set the switch on the right and for 4, 5 and 6, to the left. 4-6 1-3 S001; 3 2 1 / 6 54 S002
CZ-RWST2 / CZ-RWST3					
Position of receiver's (inside indoor unit) address switch	The position of the receiver's address switch does not matter.	1 2 3 / 4 5 6 S001 S002	1 2 3 / 4 5 6 S001 S002	●●●●●	For 1, 2 and 3, set the switch on the left and for 4, 5 and 6, to the right. 1 2 3 / 4 5 6 S001 S002
CZ-RWSL2					
Position of the operation panel's (inside indoor unit) address switch	The position of the receiver's address switch does not matter.	ADR 1 2 3 / 4 5 6	ADR 1 2 3 / 4 5 6	●●●●●	For 1, 2 and 3, set the switch on the left and for 4, 5 and 6, to the right. ADR 1 2 3 / 4 5 6
CZ-RWSC2					
Position of the Receiver's Address Switch	The position of the receiver's address switch does not matter.	1 2 3 ADR 4 5 6	1 2 3 ADR 4 5 6	●●●●●	For 1, 2 and 3, set the switch on the left and for 4, 5 and 6, to the right. 1 2 3 ADR 4 5 6

Setting Addresses (CZ-RWSY2 / CZ-RWSK2)

(Setting the address of the indoor unit)

1. First of all, set the address for the remote control with Setting Remote Control Address (See the previous page).
2. Press [Emergency Operation] ⏻ of the indoor unit for four seconds or more.
   When you do this, the lamps of the display will blink one after another.
3. Press [ADR] on the remote control.
4. The buzzer will sound and the address of the indoor unit will change to the address displayed on the remote control.
5. If you press [Emergency Operation] ⏻ of the indoor unit once, the lamps on the indoor unit's display will turn off.

NOTE

- Please do not hold the [Emergency Operation] ⏻ button of the indoor unit down while the indoor unit's display lamps are blinking one after another.
- Make sure to operate while the indoor unit is stopped.
- The address of indoor unit is set to "ALL" at the time of the shipment.

8-11. Emergency Operation

Use [Emergency Operation] ⏻ in the following situations when there is an urgent need.

- When the remote control's batteries have failed.
- When the remote control is broken.
- When the remote control is lost.

*1 Figures: CZ-RWSU2, CZ-WRSY2, CZ-RWST2 and CZ-RWST3 are of receivers (inside indoor unit), CZ-RWSL2 is of the operation panel (inside indoor unit) and Indoor Unit (CZ-RWSK2) is of its front panel.

CZ-RWSU2 / CZ-RWST2 / CZ-RWSY2 / Indoor Unit (CZ-RWSK2) / CZ-RWST3

Start : press [Emergency Operation] ⏻ of the receiver.

If the indoor temperature is 24 °C or greater when the unit starts running, it will act as a cooling mode.

If the indoor temperature is less than 24 °C when the unit starts running, it will act as a heating mode.

Stop : press [Emergency Operation] ⏻ of the receiver again.

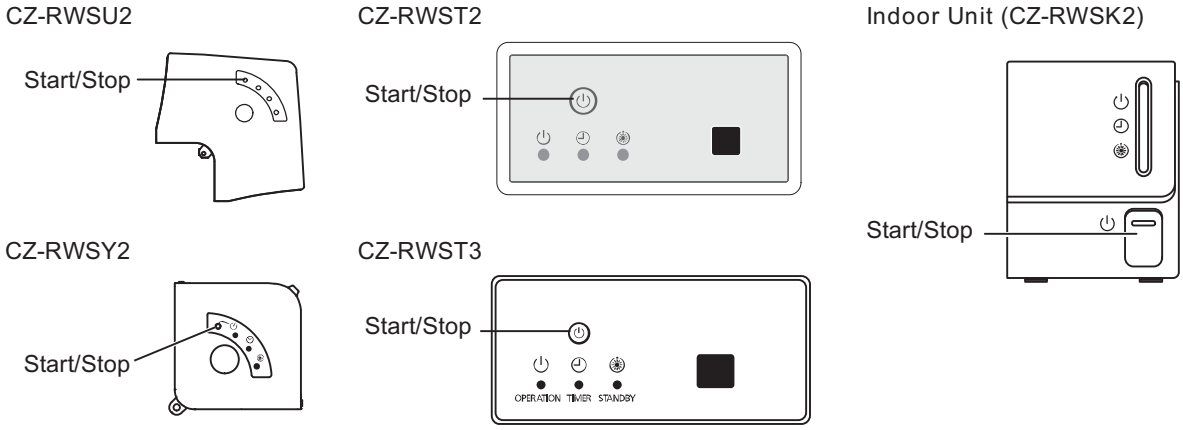

NOTE

- The Test Run/On and Test/On switches are for use when the unit is installed and test run. It is not for normal use.
- If the [Normal/Stop ALL] switch is on Stop ALL, the unit cannot receive signals from the remote control.

CZ-RWSC2 / CZ-RWSL2

1. Press [Emergency Operation] ⏻ of the receiver.
   If the indoor temperature is 24 °C or greater when the unit starts running, it will act as a cooling mode.
   If the indoor temperature is less than 24 °C when the unit starts running, it will act as a heating mode.
2. If you press , the wind direction automatically oscillates up and down.

Stop : press [Emergency Operation] ⏻ of the receiver again.

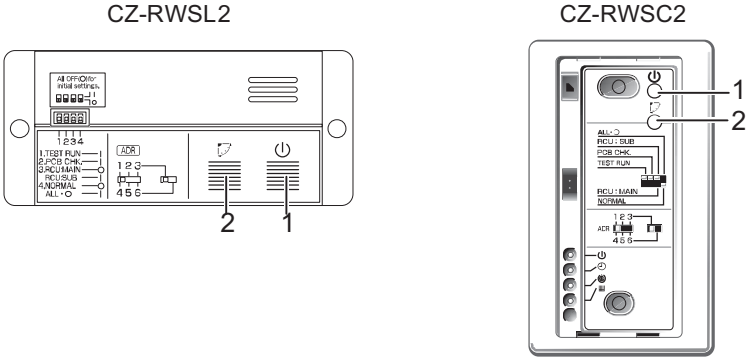

NOTE

- The Test Run/On and Test/On switches are for use when the unit is installed and test run. It is not for normal use.
- If the [Normal/Stop ALL] switch is on Stop ALL, the unit cannot receive signals from the remote control.

8-12. Miscellaneous Settings

A variety of changes can be made to settings, depending on the indoor unit being used.

Operation mode indicator, time display (24 hour, AM/PM), Heat Max Temp

- (These settings are saved in nonvolatile memory in the remote control, so even when its batteries are changed, the settings do not have to be made again.)
- First check the display of the remote control when the unit is stopped and then make any desired settings.

How to Operate

- While holding down the buttons below, every time is pressed the remote control's display changes.
- Whatever is being displayed when you release is set.

Setting Item	Operation Button	Setting Content	Remote Control Display
Remote control operation mode display setting when is pressed	Press while pressing	Heat Pump (with Auto)	
		Heat Pump (without Auto)	
		Dedicated air conditioner	
Clock display setting	Press while pressing	24-hour	23:59
		AM/PM	PM 11:59
Max possible temperature setting in the Heat mode	Press while pressing	Maximum heating temperature range is 26 °C – 30 °C	26→27→28 30←29

8

8-13. Before Requesting Service

Before requesting service, please check the followings.

Problem	Cause	Solution
The unit doesn't work even when ⏻ is pressed on the remote control.	The power to the indoor unit is not ON.	Make sure the power to the indoor unit is ON.
	Is the Normal/Stop All switch in the Stop All position?	Switch it to the Normal position and cancel operation.
	Are the remote control's batteries dead?	Change the batteries.
	Is there a mismatch between the display lamp and cooling/heating or is it set to something other than Auto? (The operating lamp stays lit, while the timer lamp and the standby lamp blink alternately.)	Change the operating mode.
	Do the addresses match one another?	Check the addresses of the receiver*1 and the remote control.
The air conditioner starts and stops on its own.	Has the timer been set to repeat?	Check the timer settings.
"EP" is displayed on the remote control when the unit is stopped.	An error has occurred in the non-volatile memory.	Please contact your sales outlet.
Although the unit is for air conditioning only, either Auto or Heat is indicated in the display.		Make settings to the remote control's operation mode display.
After putting the batteries in the remote control, even when it is operated, the display does not change.		Press the Reset button on the remote control.
The timer cannot be set.		Make the settings when the remote control is in Operation Display.

If the problem persists even after you check the foregoing items, stop the unit, disconnect the power to the indoor unit and contact the dealer where the product was purchased with the model number and problem you are having.
As it is dangerous, under no circumstances should you undertake repairs yourself.
Further, when the receiver's*2 lamps are blinking; please contact your retailer with that information.

* 1 CZ-RWSL2 is an operation panel

* 2 CZ-RWSL2 is a display

■ Specifications

CZ-RWSU2/CZ-RWST2/CZ-RWSC2/CZ-RWSY2 /CZ-RWSL2/CZ-RWSK2/CZ-RWST3

Wireless Remote Control

Dimensions	182 mm (H) X 61 mm (W) X 18.5 mm (D)
Power source	Two AAA alkaline batteries
Clock Accuracy	±30 seconds per month (at 25 °C)

CZ-RWSU2/CZ-RWST2/CZ-RWSC2 /CZ-RWSY2/CZ-RWST3

Receiver

Dimensions	CZ-RWSU2	200 mm (H) X 200 mm (W) X 25 mm (D)
	CZ-RWST2	65 mm (H) X 130 mm (W) X 22 mm (D)
	CZ-RWSC2	120 mm (H) X 70 mm (W) X 13 mm (D)
	CZ-RWSY2	108 mm (H) X 108 mm (W) X 20 mm (D)
	CZ-RWST3	65 mm (H) X 141 mm (W) X 22.5 mm (D)
Power source		16 V DC (Supplied from the terminal strip of the indoor unit's remote control)

CZ-RWSL2

Display	Dimensions	37 mm (H) X 70 mm (W) X 22 mm (D)
	Power source	5 V DC (supplied from the operation panel)
Operation Panel	Dimensions	55 mm (H) X 120 mm (W) X 16 mm (D)
	Power source	16 V DC (Supplied from the terminal strip of the indoor unit's remote control)

■ How to Install the Wireless Remote Controller Receiver

8-14. Common to All Models

1. Warnings about Installation of Receivers

The wireless remote uses a very weak infrared light for its signal, which can result in the signal not being received because of the following influences, so take care in where the unit is installed.

- Inverter or rapid-start type fluorescent lights. (Models without glow lamps)
- Plasma display or LCD televisions.
- Direct sunlight or other sources of bright light.

2. Warnings about Installing Remote Controls

(1) If a remote control is to be operated from a remote control holder that is hung on a wall, turn on the lights in the room as well as any electrical appliances and then check to make sure the air conditioner works with the remote control in the location where it will be installed. If it works, continue with installation.

(2) If the air conditioner is to be switched from the main sensor to a remote control sensor, pay attention to the following when installing.

- Locate where no warm or cold drafts will affect it.
- Locate in a place free from direct sunlight.
- Locate where it will not be affected by any other heat/cold source.

3. Things to remember when wired and wireless remotes are installed at the same time

Two remote controls can be used to control the unit if the wireless remote control kit is installed at the same time as the wired remote control.

(Up to 2 remotes [a wireless remote kit and the wired remote control] can be installed.)

When using 2 remotes, one or more units can be operated by the remotes.

NOTE

1. When wiring remote controls, be sure to double-check the terminal numbers of the indoor unit before connecting them so there are no mistakes in the wiring. (Damage will occur if high voltage [e.g. supply voltage] is applied)
2. It is not possible to use more than one wireless remote control kit with one indoor unit.
   (A receiver located separately can be used at the same time)
3. If both a wireless and a wired remote control are to be installed and used at the same time, one of them must be set up as the sub remote control.

- If the wired remote control is to be the sub remote, change the wired remote control to the sub remote.
- If the wireless remote control is to be the secondary, turn the #3 switch on the wireless receiver (operation panel) from OFF to ON.

When 1 indoor unit is operated by 2 remote controls:

※ Either of the remotes can be set to main/sub.

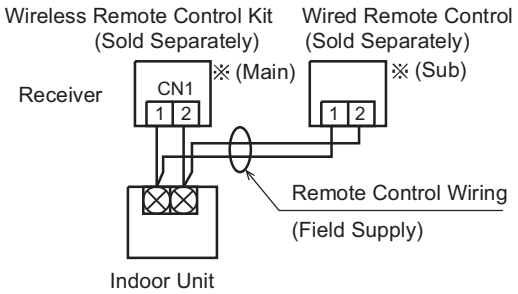

- Use wiring of 0.5 mm^2 to 2 mm^2 for field supply.
- Use a total wire length of no more than 400 m.

If a group of units are to be controlled by 2 remote controls;

※ Main/sub remote controls will work regardless of which indoor unit they are installed to.

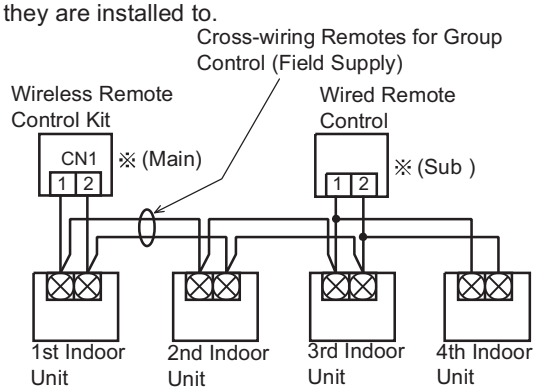

- Use wiring of 0.5 mm^2 to 2 mm^2 for field supply.
- Make the total wire length when cross-wiring a group no more than 200 m.

CZ-RWSU2

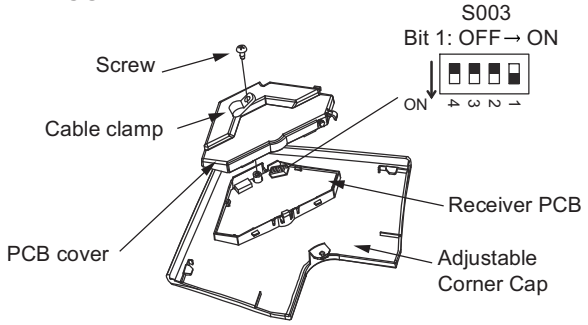

CZ-RWST2 • CZ-RWST3

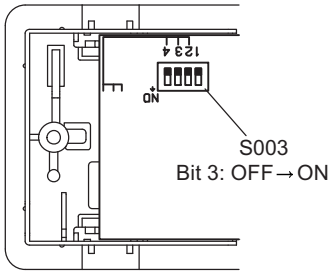

CZ-RWSL2

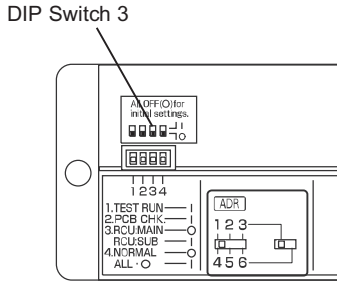

CZ-RWSC2

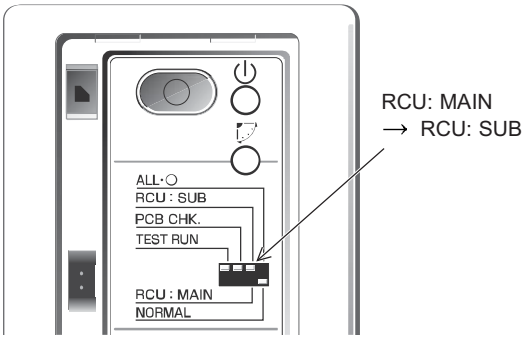

8

8-15. CZ-RWSU2

1. Accessories

No.	Accessories	Quantity
1	Receiver	1
2	Remote Control	1
3	Remote Control Holder	1

No.	Accessories	Quantity
4	Dry-cell Batteries	2
5	Users Manual	1
6	Truss Self-Tapping Screws 4 X 16	2
7	Cable clamp	1

2. Installing the Receiver

The receiver can only be installed on the corner indicated in Fig. 8-1, so consider how the panel will face when it is installed on the indoor unit.

(1) Remove the air inlet grill.

(2) Remove the screw holding the adjustable corner cap, slide the cap to the side and remove it. (Fig. 8-2)

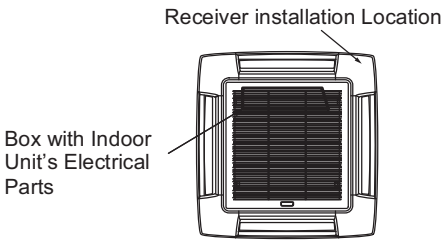

Fig. 8-1

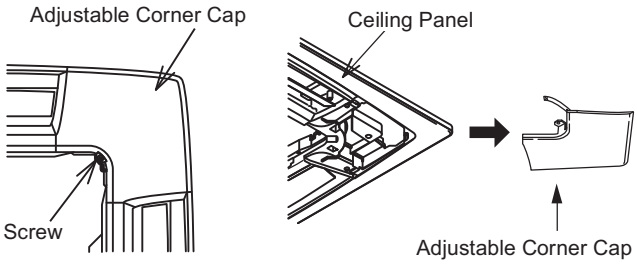

Fig. 8-2

(3) To pass the wire through the panel, bend back the clip on the hexagonal hole (diagonal line) and then pass wire protruding from the wireless receiver through the grill. (Fig. 8-3)

(4) After wiring according to the directions in Wiring the Receiver Unit below, leave enough wiring so the receiver's adjustable corner cap can be removed and fasten the cable clamp with its screw. (Fig. 8-3)

(5) Hang the string on the corner cover onto the pin on the ceiling panel as shown in the diagram. Then slide the corner cover onto the ceiling panel until the three clips are correctly located, and then fix it in place with the screws. (Fig. 8-4)

- Make sure the wire is not caught.
- Refer to the installation instructions supplied with the panel.

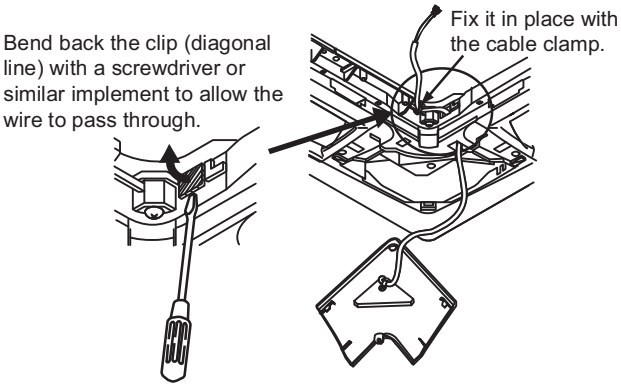

Fig. 8-3

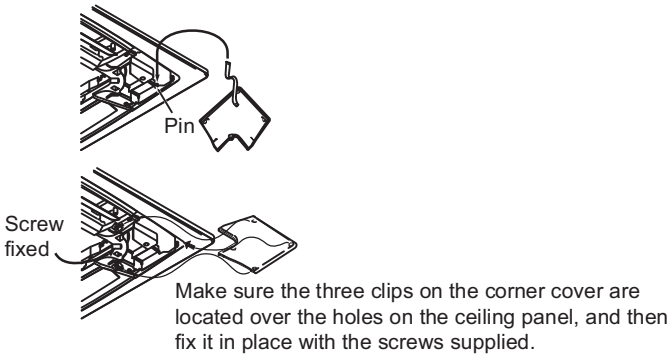

Fig. 8-4

NOTE

(1) If the wiring for the receiver is bundled with other wires, such as the incoming line, it may cause a malfunction, so avoid putting them together.

(2) If something causes the unit's power source to make noise it will be necessary to resolve the problem, such as by installing a noise filter.

- For more information about wiring or test operation, refer to Wiring the Receiver and Test Run.

3. Wiring the Receiver

- Wiring Diagram

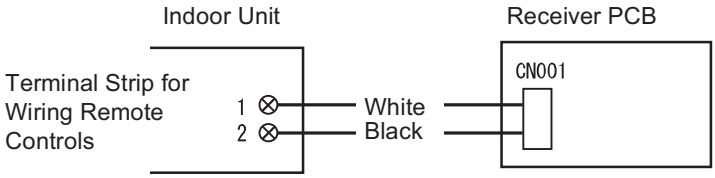

- Connections

Connect the wires from the receiver to the remote control terminal strip on the indoor unit. (Polarity does not matter)

4. Test Operation

Implementing a Test Run

1. Turn the #1 DIP switch [S003] on the receiver's PCB from OFF to ON and operate the wireless remote control with its Start/Stop button.
2. During a test run, all display lamps on the display will light up.
3. During a test run, it is not possible to adjust the temperature.
4. After completing a test run, be absolutely sure to turn the #1 DIP switch from ON to OFF and make sure none of the display lamps are blinking. Also, replace the PCB cover back as it was and fasten it; while holding the wiring with the cable clamp, tighten its screw.

NOTE

(1) This is hard on the device, so only use this for the test run.

(2) After turning on the power, the unit will not receive any commands from the remote control for about 1 minute. This is not an error. (In fact it does receive signals, but they are cancelled.)

CZ-RWSU2

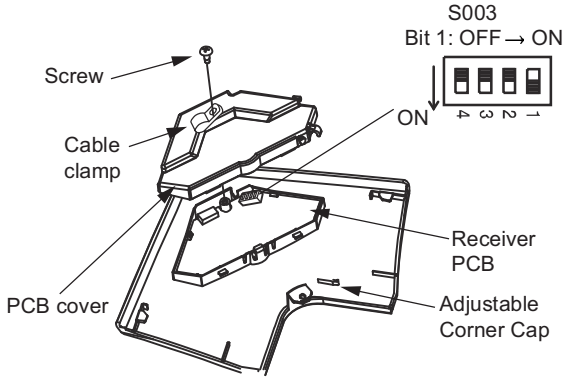

Fig. 8-5

5. Setting Address Switches

- When more than one receiver and remote control are installed in the same room, setting up addresses allows them to avoid interfering with each other.
- Refer to the Users Manual for information on how to change the addresses of the remote controls.
- Changing the address of a receiver can be done after removing the screw to the receiver's PCB cover. Once the change is complete, put the cover back in place; while holding the wiring with the cable clamp, tighten its screw.

Address Display on the Remote Control	ALL	1	2	·····	6
Position of the Receiver's Address Switch	It doesn't matter where the receiver's address switch is.	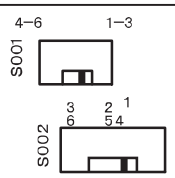	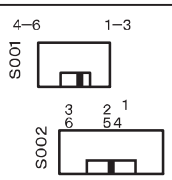	·····	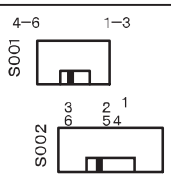

8

8-16. CZ-RWST2

1. Accessories

No.	Accessories	Quantity
1	Receiver	1
2	Remote Control	1
3	Remote Control Holder	1

No.	Accessories	Quantity
4	Dry-cell Batteries	2
5	Users Manual	1
6	Truss Self-Tapping Screws 4 X 16	2
7	Cable tie	1

2. Installing the Receiver

● Ceiling Suspended Model

(1) Open the air inlet grill on the side panel, remove the 1 screw and then move it toward the front (direction of the arrow) and remove it. (Fig. 8-6)

(2) Wrap the tip of a slotted screwdriver with plastic tape and then slip it in to the side of and under where O is printed on the cover, wiggling the cover free. (Fig. 8-7) (Be careful not to scratch the panel.)

(3) After passing the lead wire through the panel, install the receiver in the hole in the panel. (The projecting parts of the receiver is held in the hole in the panel)

(4) Fasten the receiver's lead wire to the cable clip that is holding the wire from the louver motor. (Fig. 8-8)

(5) Attach the side panel.

(6) Put the receiver's lead wire together with other wires, such as the louver motor wire and fasten them with the wire saddle. (Fig. 8-9)

• Use the hole in the upper part of the wiring box to lead it in.

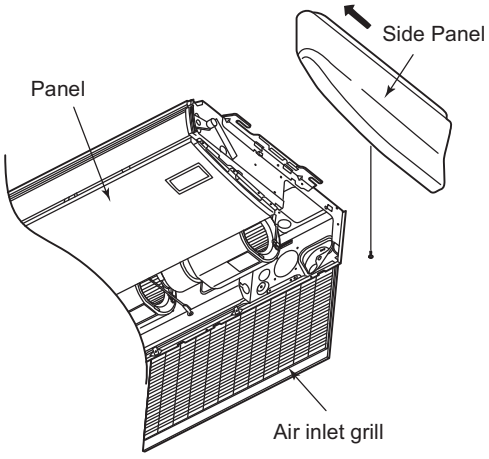

Fig. 8-6

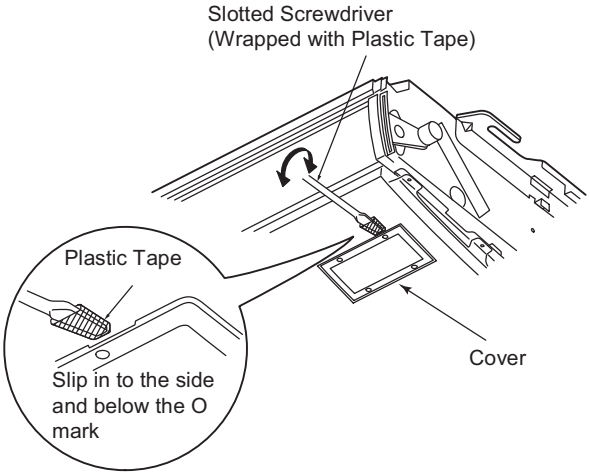

Fig. 8-7

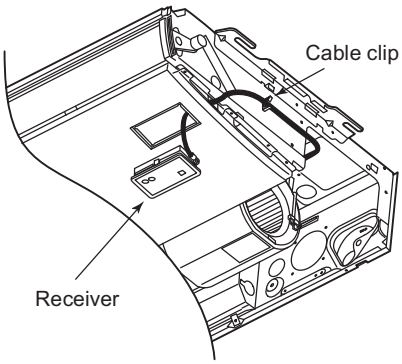

Fig. 8-8

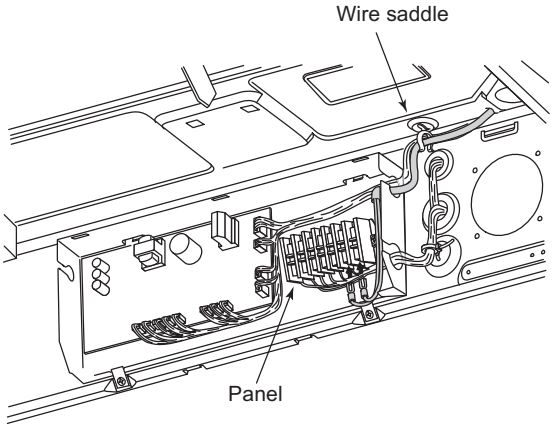

Fig. 8-9

8

● Unidirectional cassette model for high ceilings/Unidirectional ceiling cassette model

(1) While spreading the tabs of the cover, pull it out from the panel to the front. (Fig. 8-10)

(2) Pass the lead wire through the panel and install the receiver in the hole in the panel.
(The projecting parts of the receiver hold it in the hole in the panel)

(3) Press the lead wire from the receiver in along the rib on the back of the panel.
If installing to a unidirectional high ceiling cassette, pass it through the cutout. (Fig. 8-11)

(4) Install the panel on the indoor unit.

(5) Fasten the lead wire sticking out from the panel with the cable clips on the inside of the indoor unit. (Fig. 8-12)

(6) Draw the lead wire into the electrical box through the hole on the bottom and connect it to the remote control terminal strip.
If installing to a high ceiling unidirectional cassette, fasten the wire at the latch of the fan casing with the enclosed cable tie. (Fig. 8-13)

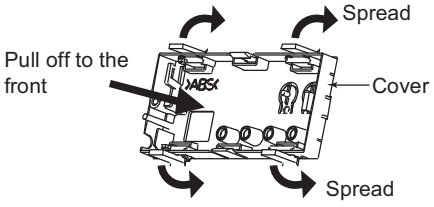

Fig. 8-10

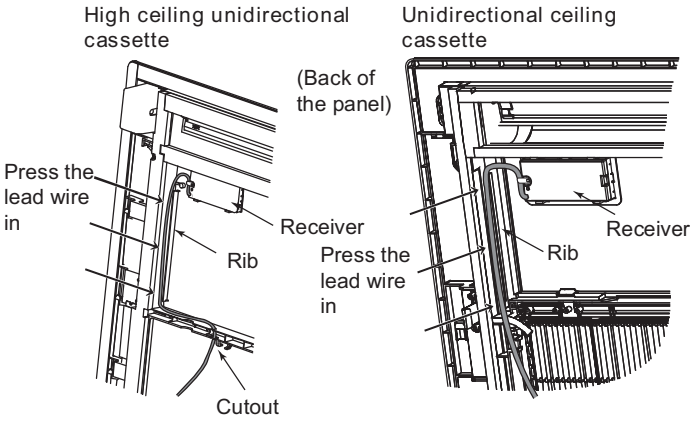

Fig. 8-11

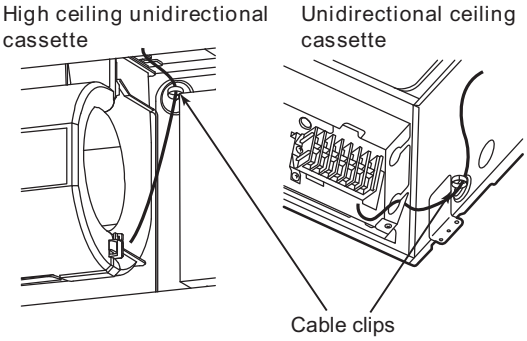

Fig. 8-12

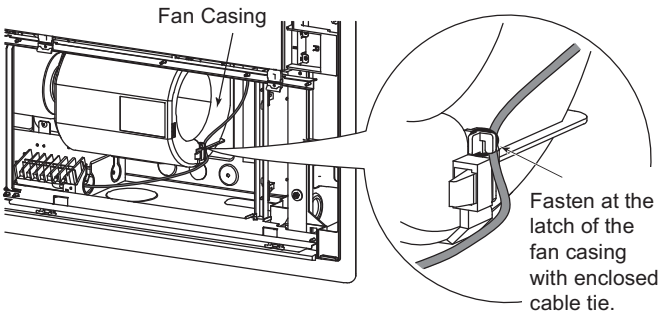

Fig. 8-13

NOTE

(1) If the wiring for the receiver is bundled with other wires, such as the incoming line, it may cause a malfunction, so avoid putting them together.

(2) Fasten the lead wire securely so it does not get wrapped up in the fan.

(3) If something causes the unit's power source to make noise it will be necessary to resolve the problem, such as by installing a noise filter.

- For more information about wiring or test operation, refer to Wiring the Receiver and Test Run.

3. Wiring the Receiver

Wiring Diagram

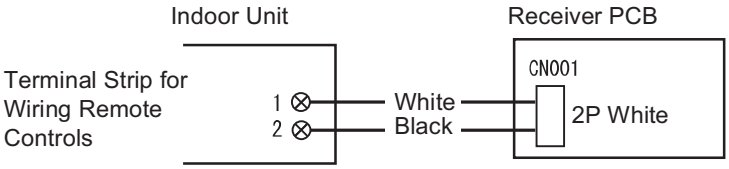

Connections

Connect the wires from the receiver to the remote control terminal strip on the indoor unit. (Polarity does not matter)

4. Test Operation

Implementing a Test Run

1. Turn the #1 DIP switch [S003] on the receiver's PCB from OFF to ON and operate the wireless remote control with its Start/Stop button.
2. During a test run, all display lamps on the display will light up.
3. During a test run, it is not possible to adjust the temperature.
4. After completing a test run, be absolutely sure to turn the #1 DIP switch from ON to OFF and make sure none of the display lamps are blinking. Also, replace the PCB cover back as it was and fasten it; while holding the wiring with the cable clamp, tighten its screw.

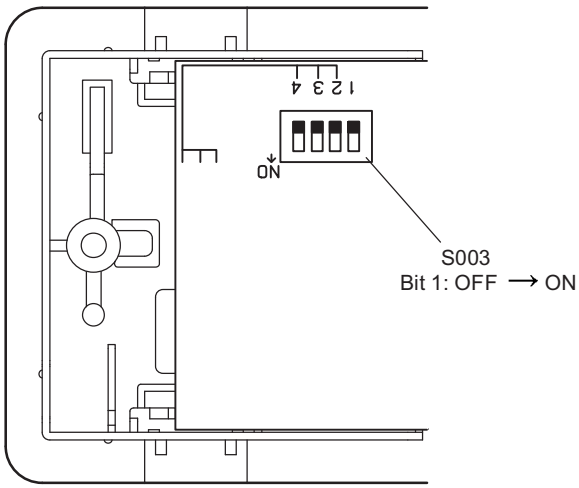

Fig. 8-14

NOTE

(1) This is hard on the device, so only use this for the test run.

(2) After turning on the power, the unit will not receive any commands from the remote control for about 1 minute. This is not an error. (In fact it does receive signals, but they are cancelled.)

5. Setting Address Switches

- When more than one receiver and remote control are installed in the same room, setting up addresses allows them to avoid interfering with each other.
- Refer to the Users Manual for information on how to change the addresses of the remote controls.
- Changing the address of a receiver can be done after removing the screw to the receiver's PCB cover. Once the change is complete, put the cover back in place; while holding the wiring with the cable clamp, tighten its screw.

Address Display on the Remote Control	ALL	1	2	·····	6
Position of the Receiver's Address Switch	It doesn't matter where the receiver's address switch is.	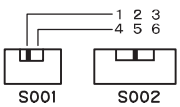	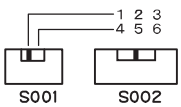	·····	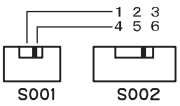

8

8-17. CZ-RWSL2

1. Accessories

No.	Accessories	Quantity
1	Operation Panel	1
2	Display	1
3	Remote Control	1
4	Remote Control Holder	1

No.	Accessories	Quantity
4	Dry-cell Batteries	2
5	Users Manual	1
6	Truss Self-Tapping Screws 4 X 16	2
7	Pan Head Self-Tapping Screws 4 X 10	4
8	Plastic Clamp L150	3

Installing the Display/Operation Panel

Resin Panel

Installing the Operation Panel

(1) Remove the 2 screws and remove cover A from the back of the panel. (Fig. 8-15)

(2) Fasten the operation panel to the location in the diagram below with the 2 enclosed screws (4 X 10). (Fig. 8-16)

(3) Pass the wiring for the display (W2, 6P white connector) through the back of the panel.

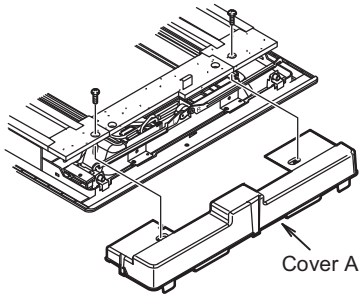

Fig. 8-15

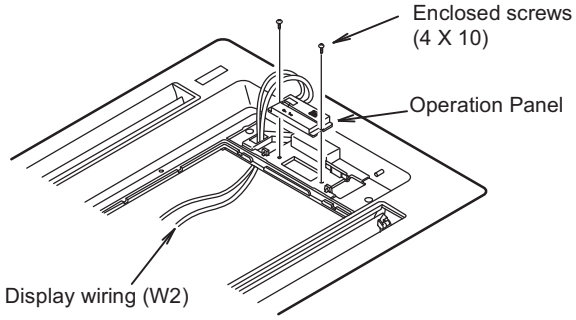

Fig. 8-16

Installing the Display

(1) Cover B is fitted inside cover A, so remove the 1 screw and detach it by pressing on it from the front side of the panel. (Fig. 8-17)

(2) Connect the wiring (W2) for the display that is sticking out from the operation panel and fit the display into the panel. Make sure the 6P white connector is firmly connected all the way in.

(3) Bend the lead wire of the display into shape so it does not come in contact with the louver shaft. There is a groove in the circled part in diagram 3 that is for passing wire through; press the lead wire into this groove so there is no slack in it.

(4) Attach cover A. When doing so, press it securely into the place indicated by the arrow in Fig 8-18.

(5) Shape the lead wire of the operation panel appropriately and fasten it with the enclosed plastic clamp.

(6) Install the ceiling panel.

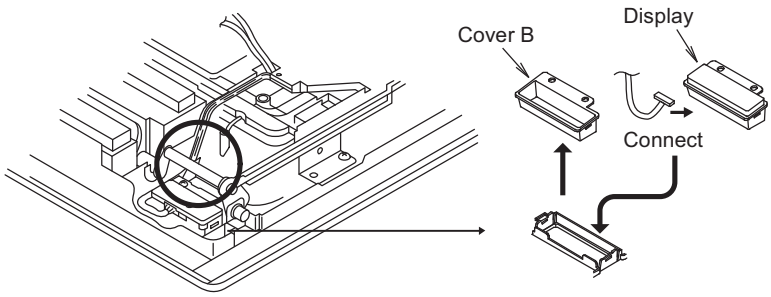

Fig. 8-17

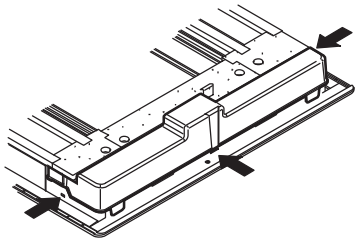

Fig. 8-18

Metal Panel

Installing the Operation Panel

(1) Remove the 2 screws and remove cover A from the back of the panel. (Fig. 8-19)

(2) Fasten the operation panel to the location in the diagram below with the 2 enclosed screws (4 X 10). (Fig. 8-20)

(3) Pass the wiring for the display (W2, 6P white connector) through the back of the panel.

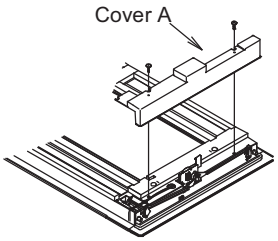

Fig. 8-19

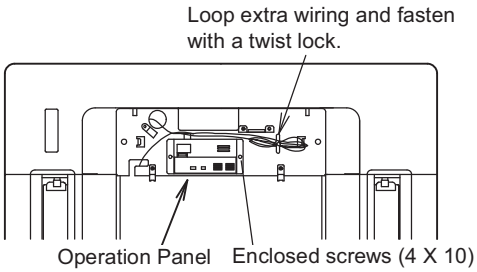

Fig. 8-20

Installing the Display

(1) Cover B is fit into Cover A, so spread the points as indicated in figure 8-21 and remove it.
The tape holding cover B is only to protect it during transport, so remove it and throw it away.

(2) Connect the wiring (W2) for the display that is sticking out from the operation panel and fit the display into the panel.
Make sure the 6P white connector is firmly connected all the way in.

(3) Pass the lead wire for the display through the cutout in the panel, and using the hole in the metal panel, fasten it with the plastic clamp. (Fig. 8-22)

(4) Attach cover A.

(5) Properly route the lead wire of the operation panel and fasten it with the twist lock. (Fig. 8-20)

(6) Install the ceiling panel.

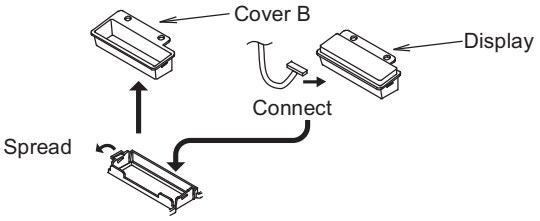

Fig. 8-21

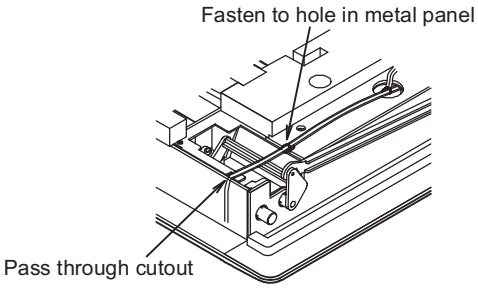

Fig. 8-22

NOTE

(1) If the wiring to the operation panel is bundled together with other wiring, such as the incoming line from the power source, it can cause a malfunction, so avoid doing so.

(2) If something causes the unit's power source to make noise it will be necessary to resolve the problem, such as by installing a noise filter.

- For more information about wiring or test runs, refer to Wiring the Receiver and Test Run.

3. Wiring

Wiring Diagram

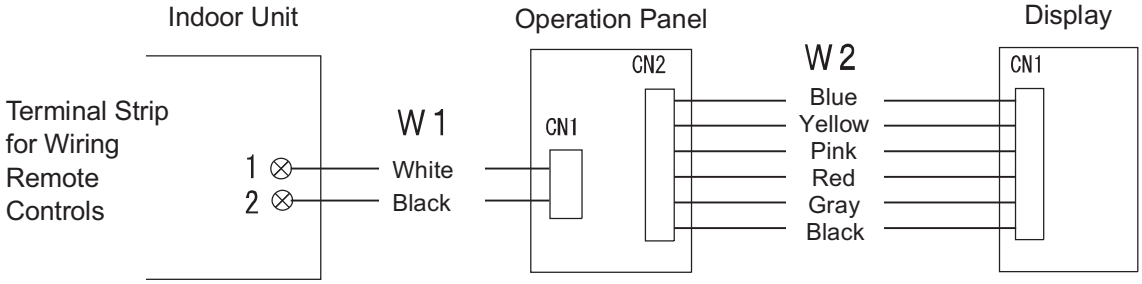

Connections

(1) Connect W1 to the remote control terminal strip on the indoor unit. (Polarity does not matter)

(2) Connect the display and the operation panel with W2.

4. Test Operation

Implementing a Test Run

1. Turn the #1 DIP switch of the operation panel from OFF to ON (Down → Up) and operate the wireless remote control with its Start/Stop button.
2. During a test run, all display lamps on the display will light up.
3. During a test run, it is not possible to adjust the temperature.
4. After completing a test run, be absolutely sure to turn the #1 DIP switch from ON to OFF (Up → Down) and make sure none of the display lamps are blinking. Also, replace the PCB cover back as it was and fasten it; while holding the wiring in the cable clamp, tighten its screw.

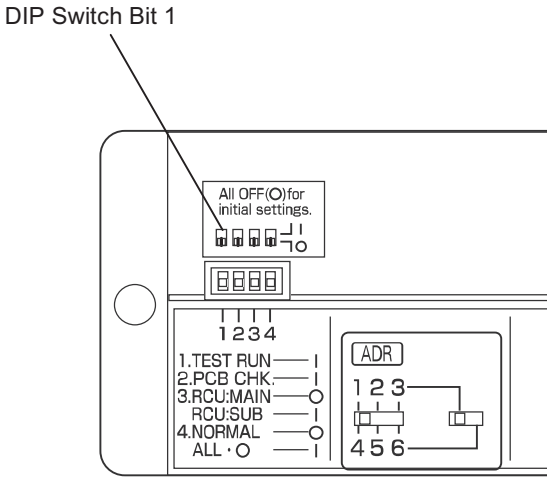

Fig. 8-23

NOTE

(1) This is hard on the device, so only use this for the test run.

(2) After turning on the power, the unit will not receive any commands from the remote control for about 1 minute. This is not an error. (In fact it does receive signals, but they are cancelled)

5. Setting Address Switches

- When more than one display/operation panel and remote control are installed in the same room, setting up addresses allows them to avoid interfering with each other.
- Refer to the Users Manual for information on how to change the addresses of the remote controls.

Address Display on the Remote Control	AL L	1	2	·····	6
Position of the Receiver's Address Switch	It doesn't matter where the receiver's address switch is.	1 2 3 / 4 5 6	1 2 3 / 4 5 6	·····	1 2 3 / 4 5 6

8

8-18. CZ-RWSC2

1. Accessories

No.	Accessories	Quantity
1	Receiver (Enclosed 200 mm wiring)	1
2	Remote Control	1
3	Remote Control Holder	1
4	Dry-cell Batteries	2

No.	Accessories	Quantity
4	Users Manual	1
5	Truss Self-Tapping Screws 4 X 16	2
6	Small screw	2
7	Wood screw	2
8	Cable tie	1

2. Installing the Receiver

When using a separately installed receiver as a built-in model, install it to the □IS switch box (field supply) shown in the diagram on the right, which has been built into the wall on site in advance.

(1) Remove the face plate of the receiver by slipping a slotted screwdriver or the like into the cutout on the bottom.

(2) Install the receiver with the 2 enclosed small M4 screws.

(3) Connect the receiver's wiring (2 cores) with the wiring from the indoor unit. (Refer to the chapter on wiring the receiver) When wiring receivers, be sure to double-check the terminal numbers of the indoor unit before connecting them so there are no mistakes in the wiring. (Damage will occur if high voltage [e.g. supply voltage] is applied)

(4) Attach the face plate.

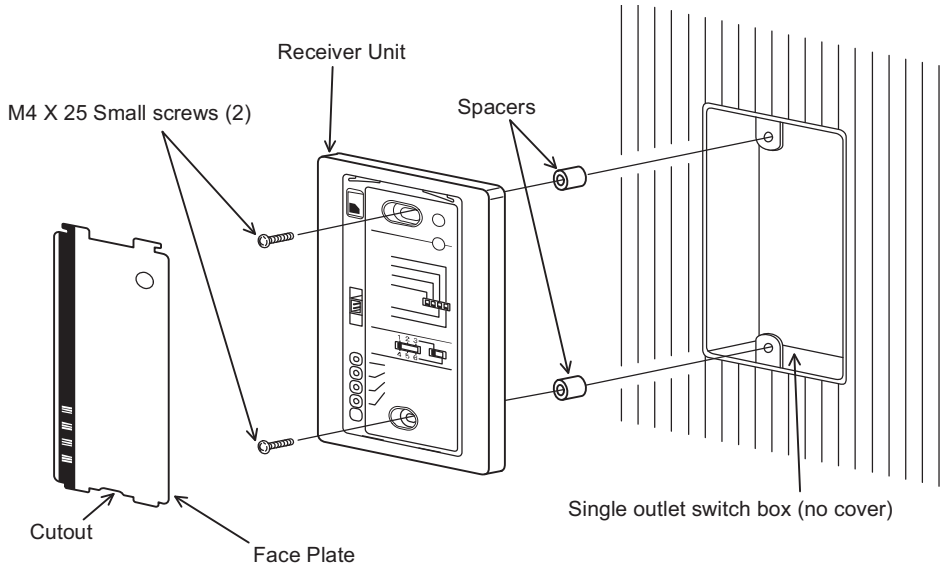

Fig. 8-24

8

When using a separately installed receiver as an exposed model, attach it to a wall where the receiver can be affixed.

(1) Put a slotted screwdriver or the like into the groove on the bottom of the receiver unit and twist it to remove the bottom of the case. (Fig. 8-25)
(2) To enable the receiver's wiring to stick out from the upper part of the case (thin part at center-top), use side-cutters or the like to cut a hole in the case big enough for the remote control cord (sold separately). (Fig. 8-26)
(3) Disconnect the wires that were connected at shipment from the connector.
(4) After installing the remote control cord (sold separately) at the position in Fig. 8-27 with the enclosed cable tie, connect it to the connector on the receiver.
(5) Shape the remote control cord at the top of the PCB so it fits inside the receiver and after configuring the wiring like it is in Fig. 8-28, attach the lower case. When doing this, arrange the head of the cable tie so it face sideways.
(6) Remove the face plate and use the wood screws (2) to install the receiver unit.
(7) Use the cord clip that comes enclosed with the remote control cord to fasten it to the wall.
(8) Attach the face plate.

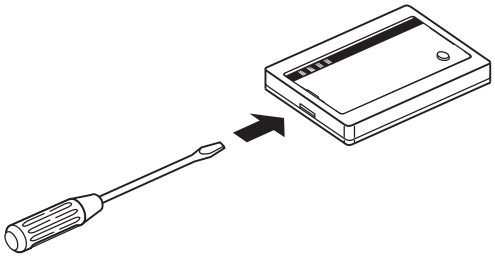

Fig. 8-25

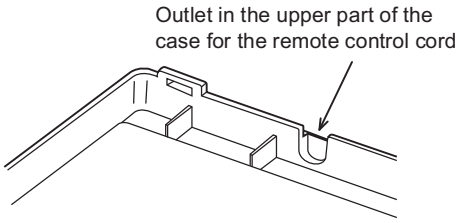

Fig. 8-26

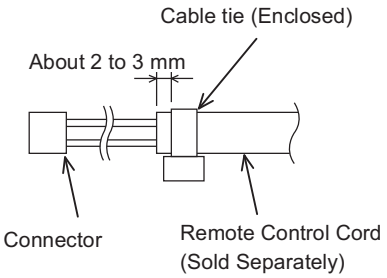

Fig. 8-27

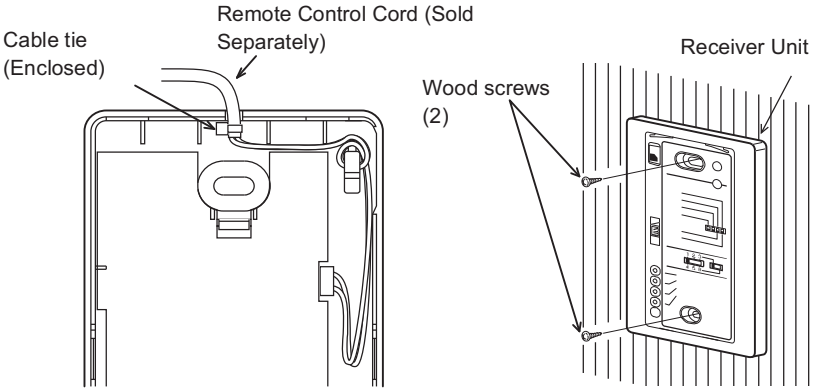

Fig. 8-28

8

When using a receiver that has been installed separately into the ceiling, use the enclosed fittings for installing to a ceiling.

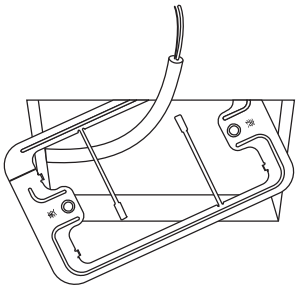

Fig. 8-29

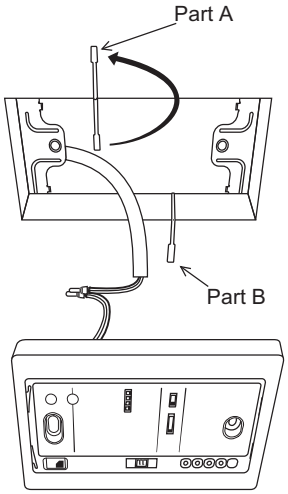

Fig. 8-30

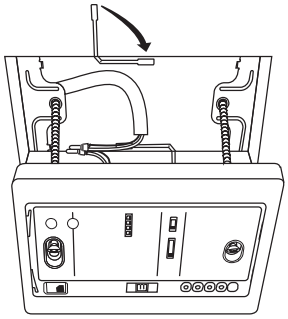

Fig. 8-31

(1) Remove the metal plate of the receiver by slipping a slotted screwdriver or the like into the cutout on the bottom.
(2) Cut out a hole in the ceiling to match the dimensions of the enclosed template. (95 X 51 mm)
(3) Pass the wiring through the enclosed installation metal fitting and put it into the hole. (Fig. 8-29)
(4) Bend parts A and B of the metal fitting so they hold onto the ceiling firmly. (Fig. 8-30)
(5) Connect the receiver's wiring (2 cores) with the wiring from the indoor unit. (Refer to the chapter on wiring the receiver) When wiring receivers, be sure to double-check the terminal numbers of the indoor unit before connecting them so there are no mistakes in the wiring. (Damage will occur if high voltage [e.g. supply voltage] is applied)
(6) Adjust the enclosed spacers so they are several millimeters thicker than the ceiling material and hold the receiver in place temporarily with the 2 enclosed small screws. (M4 X 40)
(7) Bend parts A and B back so they fit in the opening and are in the gap between the surface of the ceiling and the receiver; then tighten the screws. Do not use too much force when tightening the screws. Doing so may warp or damage the case. Move the receiver by hand and check that it can move just a little. (Fig. 8-31)
(8) Attach the face plate.

3. Wiring the Receiver

- Use wiring of 0.5 mm^2 to 2 mm^2 for field supply.
- Use a total wire length of no more than 400 m.

  Polarity does not matter.

If to be used as an embedded model ;

- Wiring Diagram

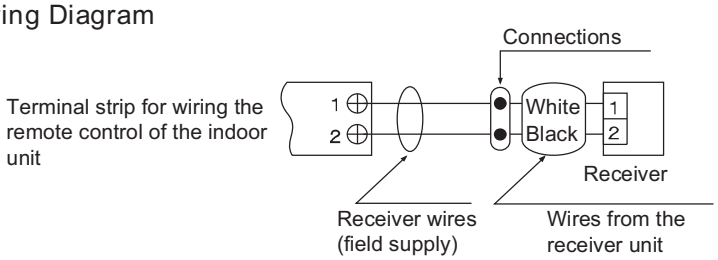

Enclosed wire joints (2, white)

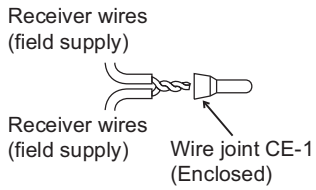

1. Strip the wire to be connected of its sheathing for 14 mm.
2. Twist the two wires together and crimp the enclosed wire joint.
3. If a special crimping tool is not used, or if the connection is made using solder, wrap the joint with insulating tape.

If it is to be used as an exposed model:

- Wiring Diagram

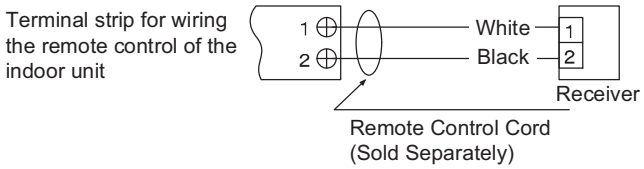

- Use remote control cord (sold separately) for wiring a separately installed receiver.

(1) For instructions on how to install a remote control cord (sold separately), refer to the chapter on Using as an Embedded Model in Installing Separate Receivers.

(2) If a remote control cord (sold separately) is to be used, refer to the Mounting Instructions attached to the remote control cord.

NOTE

(1) When wiring remote controls, be sure to double-check the terminal numbers of the indoor unit connecting them so there are no mistakes in the wiring. (Damage will occur if high voltage [e.g. supply voltage] is applied.)

(2) If the wiring to the operation panel is bundled together with other wiring, such as the incoming line from the power source, it can cause a malfunction, so avoid doing so.

(3) If something causes the unit's power source to make noise it will be necessary to resolve the problem, such as by installing a noise filter.

4. Setting Address Switches

- When more than one receiver and remote control are installed in the same room, setting up addresses allows them to avoid interfering with each other.
- Refer to the Users Manual for information on how to change the addresses of the remote controls.
- Changing the address of a receiver can be done after removing the screw to the receiver's PCB cover. Once the change is complete, put the cover back in place; while holding the wiring with the cable clamp, tighten its screw.

Address Display on the Remote Control	ALL	1	2	.....	6
Position of the Receiver's Address Switch	It doesn't matter where the receiver's address switch is.	1 2 3 / 4 5 6	1 2 3 / 4 5 6	.....	1 2 3 / 4 5 6

5. Test Operation

Implementing a Test Run

(1) Remove the face plate of the receiver's PCB and turn the DIP switch to RUN/On (Down → Up) and operate the wireless remote control with its Start/Stop button.

(2) During a test run, all display lamps on the display will light up.

(3) During a test run, it is not possible to adjust the temperature.

(4) After completing a test run, be absolutely sure to return the Test Run switch to OFF (Up → Down) and make sure none of the display lamps are blinking. Also, put the face plate back in place.

NOTE

(1) This is hard on the device, so only use this for the test run.

(2) After turning on the power, the unit will not receive any commands from the remote control for about 1 minute. This is not an error. (In fact it does receive signals, but they are cancelled.)

(3) Make sure to operate while the indoor unit is stopped.

(4) The address of indoor unit is set to "ALL" at the time of the shipment.

8-19. CZ-RWSY2

1. Accessories

No.	Accessories	Quantity
1	Receiver	1
2	Remote Controller	1

No.	Accessories	Quantity
3	Remote Control Holder	1
4	AAA alkaline batteries	2
5	Tapping screw 4x16	2
6	Clamper	1

2. Installing the Receiver Unit

As the receiver can only be installed in the corner where the panel wire comes out, as shown in Fig. 8-32, consideration should be given to orientation when fitting the panel to the indoor unit.

1. Twist off the circled area shown in Fig. 8-32 with pliers or similar.
2. Remove the suction grille and corner cover. (Fig. 8-33)

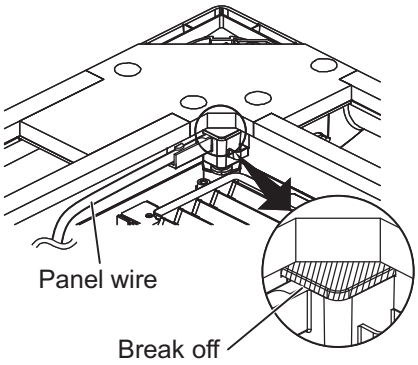

Fig. 8-32

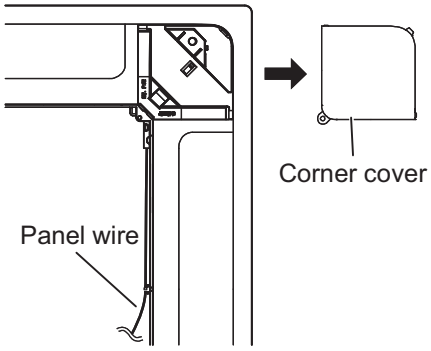

Fig. 8-33

3. Pass the wire from the wireless receiver through the grille. (Fig. 8-34)
4. Fit the panel to the indoor unit and connect the wire from the receiver to the connector (CN130/WL/WHT/10P) on the indoor control board. (Fig. 8-35)
5. After fixing the panel in place, fit the receiver to the panel taking care not to trap the wire from the receiver.
6. Clamp the receiver wire and panel wire together with the supplied clamper. (Fig. 8-35)
7. Insert the receiver wire and panel wire into the wire saddles. (Fig. 8-35)
   * Refer to the Users Manual supplied with the panel.

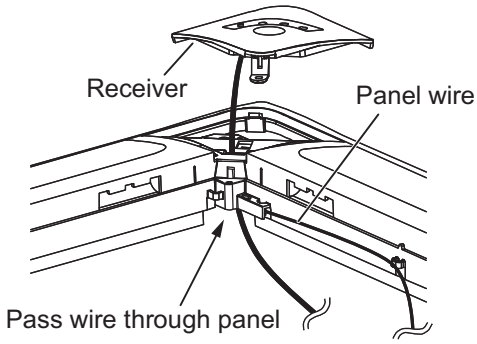

Fig. 8-34

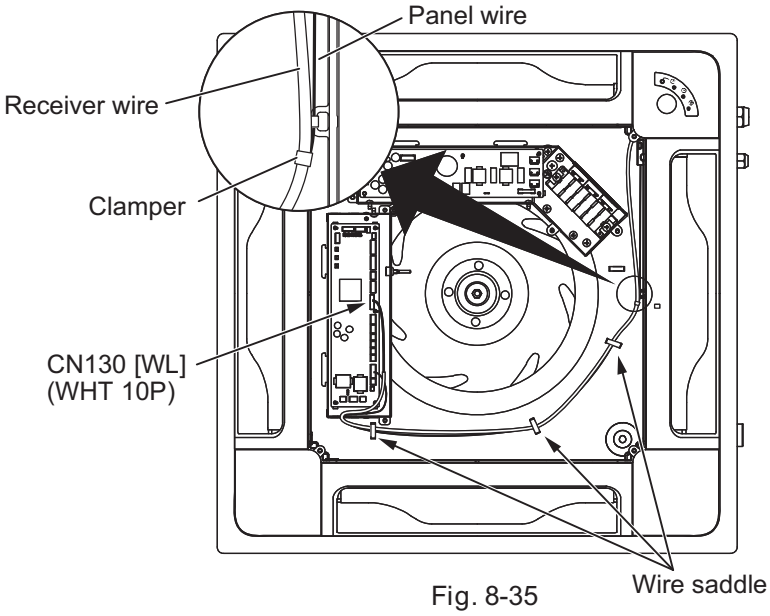

Fig. 8-35

NOTE

1. Do not twist the receiver wire and the power lead-in wire together as this could lead to malfunction.
2. If the unit power source is affected by noise, install a noise filter or take similar measures.

8-20. CZ-RWST3

1. Accessories

No.	Accessories	Quantity
1	Receiver	1
2	Remote Control	1
3	Remote Control Holder	1

No.	Accessories	Quantity
4	Dry-cell Batteries	2
5	Users Manual	1
6	Truss Self-Tapping Screws 4 × 16	2
7	Cable tie	1

2. Installing the Receiver

● Ceiling Suspended Model

(1) Remove the screw, and slide the latch to open the air-intake grille. (Fig. 8-36)

(2) Insert a flat-head screwdriver from the side, and remove the cover while pressing down on the two cover tabs. (Fig. 8-37)

(3) Route the remote control wiring through the panel, and mount the receiver into the panel holes. (Fig. 8-38)

(4) Route the remote control wiring through the adjustable clamper, and draw in the wire from the remote control wiring inlet to the inside of the indoor unit. (Fig. 8-38) (See Fig. 8-39 for how to loosen the adjustable clamper.)

(5) Route the remote control wiring through the three saddles, and draw the wire into the electrical box. (Fig. 8-39)
 * Draw in the power wire and remote control wiring separately.

(6) Connect the remote control wiring to the terminal board, route through the cable tie (accessory) to the holding clamp, and secure the remote control wiring. (Fig. 8-40)

(7) Mount the side cover, and close the air-intake grille.

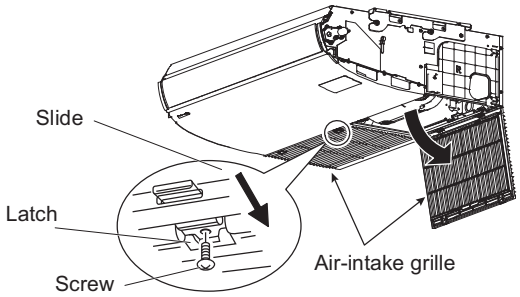

Fig. 8-36

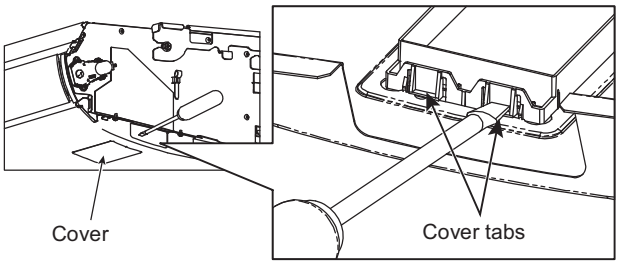

Fig. 8-37

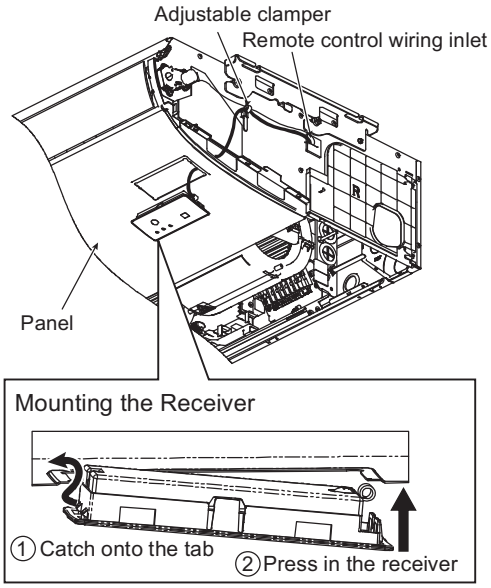

Fig. 8-38

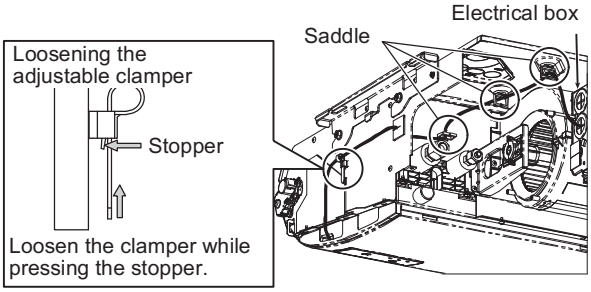

Fig. 8-39

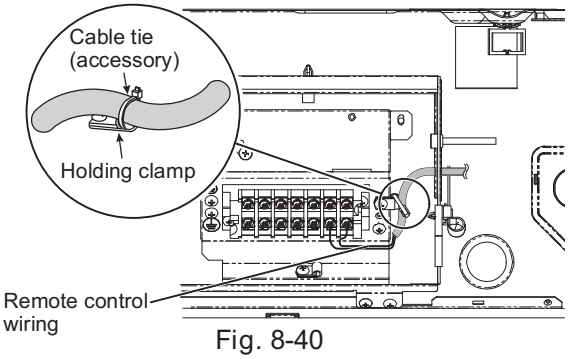

Fig. 8-40

● Removing and Mounting the Side Cover

Removing the side cover

Remove the side cover mounting screw, and slide the side cover to the front side (direction of arrow in Fig. 8-41) to remove.

Mounting the side cover

Slide in the side cover from the indoor unit front side, mount to the latch tabs, and secure using the side cover mounting screw.

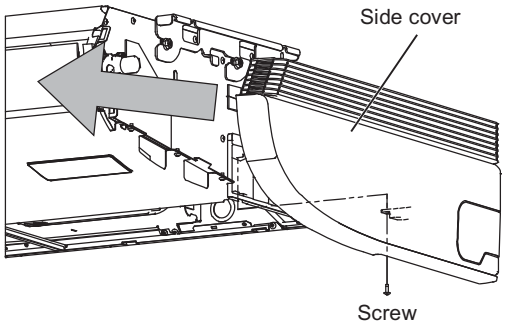

Fig. 8-41

3. Wiring the Receiver

Wiring Diagram

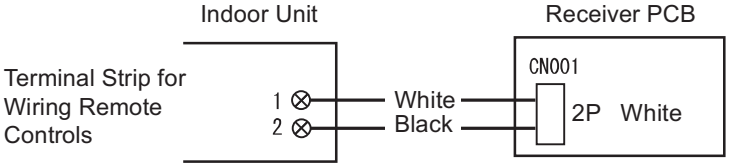

Connections

Connect the wires from the receiver to the remote control terminal strip on the indoor unit. (Polarity does not matter)

4. Test Operation

Implementing a Test Run

1. Turn the #1 DIP switch [S003] on the receiver's PCB from OFF to ON and operate the wireless remote control with its Start/Stop button.
2. During a test run, all display lamps on the display will light up.
3. During a test run, it is not possible to adjust the temperature.
4. After completing a test run, be absolutely sure to turn the #1 DIP switch from ON to OFF and make sure none of the display lamps are blinking.
   Also, replace the PCB cover back as it was and fasten it; while holding the wiring with the cable clamp, tighten its screw.

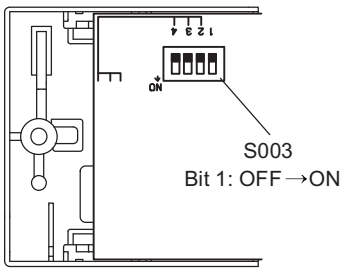

NOTE

1. This is hard on the device, so only use this for the test run.
2. After turning on the power, the unit will not receive any commands from the remote control for about 1 minute.
   This is not an error. (In fact it does receive signals, but they are cancelled.)

5. Setting Address Switches

- When more than one receiver and remote control are installed in the same room, setting up addresses allows them to avoid interfering with each other.
- Refer to the Users Manual for information on how to change the addresses of the remote controls.
- Changing the address of a receiver can be done after removing the screw to the receiver's PCB cover.
  Once the change is complete, put the cover back in place; while holding the wiring with the cable clamp, tighten its screw.

Address Display on the Remote Control	AL L	1	2	- - - -	6
Position of the Receiver's Address Switch	It doesn't matter where the receiver's address switch is.	1 2 3 / 4 5 6 S001 S002	1 2 3 / 4 5 6 S001 S002	- - - -	1 2 3 / 4 5 6 S001 S002

8

8-21. Common to All Models

1. The Self-Diagnosis Function Display and What is Detected

Alarm Display in the table below indicates the content of alarms that are displayed when a wired remote control is connected. For information on how to deal with the alarms, refer to the Mounting Instructions for the indoor unit or to Test Run or servicing materials.

Error Detected		WL Remote Control LED Display			
	Alarm Display	Run	Timer	Standby	Blinking
Communication error in the remote control circuit	E01–E03, E08–E14, E17, E18	◎	●	●	
Communication error either in the in/outdoor operation line or the sub-bus of the outdoor unit	E04–E07, E15, E16, E19–E31	●	●	◎	
Operation of indoor protection device	P01, P09–P14	●	◎	◎	Alternately
Operation of outdoor protection device	P02–P08, P15–P31	◎	●	◎	Alternately
Error in the indoor thermistor	F01–F03, F10–F11	◎	◎	●	Alternately
Error in the outdoor thermistor	F04–F09, F12–F28	◎	◎	○	Alternately
Error in the indoor EEPROM	F29	◎	◎	●	Simultaneously
Error in the outdoor EEPROM	F30, F31	◎	◎	○	Simultaneously
Error related to the compressor	H01–H31	●	◎	●	
Error in indoor settings	L01–L03 L05–L09	◎	●	◎	Simultaneously
Error in outdoor settings	L04, L10–L31	◎	○	◎	Simultaneously
Inconsistency in Air/Heat (Including an auto-temp setting for a model without auto-temp settings)		○	◎	◎	Alternately
Oil Alarm (Same as operation of outdoor protection device)		◎	●	◎	Alternately
Test Run		◎	◎	◎	Simultaneously

● : Off / ○ : On / ◎ : Blinking (0.5 sec. intervals)

When using CZ-RWSC2

If you have either an outdoor maintenance remote control or a wired remote control and a service checker special wiring (623 178 5082: for service use) at hand, you can get more detailed information about an alarm by connecting one to the service connecter as in the diagram. For information such as how to connect to receivers, etc., refer to the Users Manual that came attached with the service checker special wiring.

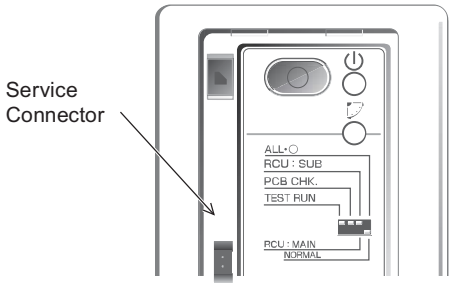

Fig. 8-42

2. Room Temperature Sensor Settings

Common to All Models

- The indoor unit and the wireless remote control are equipped with indoor temperature sensors. The sensing of indoor temperature works via one of them.
- When the unit is shipped, it is set to the indoor unit, but to switch to the remote control, press the sensor button (diagram at right) inside the remote control's cover and then check to make sure that Main Sensor on the LCD screen goes off.

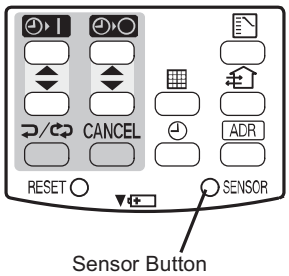

Fig. 8-43

NOTE

Even when the Sensor switch has been set to the remote control, if the unit does not receive any room temperature data from the remote control for ten minutes, it automatically switches back to the indoor unit sensor, so be sure to install the remote control facing the receiver.

8

3. Setting Up Remote Control Functions

The functions of the wireless remote can be set on site.
(These settings are saved in nonvolatile memory in the remote control, so even when its batteries are changed, the settings do not revert to the defaults.)

NOTE

The operation of the air conditioner can be impacted, depending on the settings made, so only service personnel should make the settings.
Furthermore, making changes to these settings may cause actual operation to deviate from what is printed in the Users Manual, so be sure to explain this to the customer fully.

Making Settings (Do with unit stopped)

(1) Holding down the Swing/Wind Direction + OFF Timer ▲ + Mode Select buttons at the same time for 4 or more seconds makes the Display switch to the setting screen. (See diagram below.)

(2) Use the Temperature setting buttons, △ / ▽ , to select the number of the item to be set.

(3) Use the ON Timer buttons, ▲/▼ , to change settings.

(4) The settings are saved with the Once/Every Day button. When this is done, the settings display of the LCD changes from blinking to light.

(5) If other settings are to be changed as well, repeat steps 2 to 4.

(6) When all settings have been made, press the Start/Stop button.

Example: Operation mode setting screen

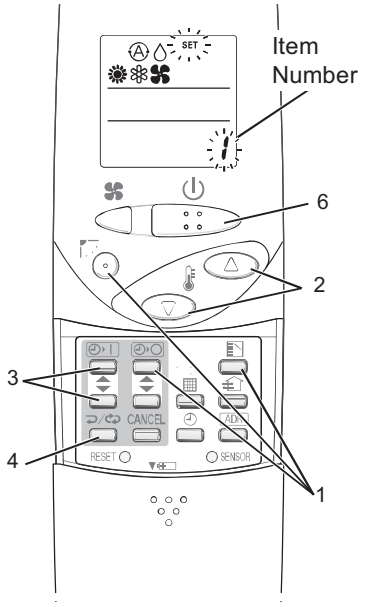

Item Number & Setting Item		Setting Content	Setting when Shipped
1	Operation Mode	→ → → → → →	
2	Flap Display	→ → (Note 1) → (No Display)	
3	Select Fan Speed	→ → → (No Display)	
4	Display of Set Temperature	°C → °F → Setting Off (Note 2)	°C
5	Time Display	24-hour (No Display) → AM/PM	24-hour
6	Ventilation Fan ON/OF F	Off (No Display) → On	OFF(Note 3)
7	Cool temp Max	05 – 35°C	30
8	Cool temp Min	05 – 35°C	18
9	Heat temp Max	05 – 35°C	26 (Note 4)
10	Heat temp Min	05 – 35°C	16
11	Dry temp Max	05 – 35°C	30
12	Dry temp Min	05 – 35°C	18
13	Auto temp Max	05 – 35°C	27
14	Auto temp Min	05 – 35°C	17
16	Address Setting Max Value	00 (ALL only) → 01 – 31	06 (Note 5)
17	Heat temp Max ON/OFF	□P (Heater Max Temp Change Off) → EP (On)	□P

NOTE

(1) While the unit is in the swinging mode (Swing/Wind Direction), the flap cannot be stopped in a desired position.
(2) When Setting OFF is selected, "°C" is displayed on the LCD screen.
(3) You can toggle between ON and OFF by pressing Ventilation for 4 seconds or more.
(4) If the Heater Max ON/OFF setting is not changed to EP (ON), the setting change will not be reflected.
(5) This is the number of addresses that can be set in the address change mode. Do not set it to 07 or above.

– MEMO –